APPENDIX 4.1A

Calculation of Maximum Hourly, Daily, and Annual Emissions

Tables presented in this Appendix are as follows:

4.1A-1 Auxiliary Boilers #1 and #2 Criteria Pollutant Emissions
4.1A-2 Auxiliary Boilers #1 and #2 HAP Emissions
4.1A-3 NTP Boilers #1 and #2 Criteria Pollutant Emissions
4.1A-4 NTP Boilers #1 and #2 HAP Emissions
4.1A-5 Emergency Generators #1, #2, #3 Criteria and DPM Emissions
4.1A-6 Fire Pump Engines #1, #2, #3 Criteria and DPM Emissions
4.1A-7 WSAC #1 and #2 Criteria Pollutant Emissions
4.1A-8 WSAC #1 and #2 HAP Emissions
4.1A-9 Dedicated Site Vehicle Emissions (Mirror Washing Equipment)
4.1A-10 Site Support Vehicle Emissions LDTs and Water Trucks
4.1A-11 Site Support Vehicle Emissions-Deliveries and Employee Commutes
4.1A-12 Diesel Fuel Storage Tank VOC Emissions
4.1A-13 Emissions Summary Matrix
4.1A-14 Commissioning Emissions Estimates

Also included in this appendix:

Attachment 4.1A-1 System Operational Support Data
Attachment 4.1A-2 Auxiliary Boiler Specification Sheets
Attachment 4.1A-3 Engine Specification Sheets
Attachment 4.1A-4 NTP Boiler Specification Sheets
Attachment 4.1A-5 WSAC Specification Sheets
Attachment 4.1A-6 Diesel Fuel Analysis Data
Attachment 4.1A-7 Natural Gas Fuel Analysis Data
Attachment 4.1A-8 South Coast Air Basin Vehicle Data/EI Data for 2010

Table 4.1A-1 Auxiliary Boilers #1 and #2 Page 1

Calculation of Criteria Pollutant Emissions for Boilers Firing Gaseous Fuels

Boiler Operation Mode: 25-100% MCR Load Case

Ops Hr/Day: 3.5 eq to full load ops

Ops Hr/Yr: 1202 eq to full load ops

1446 actual annual hours at all loads (not eq full load)

# of Units: 2

Fuel Type: Nat Gas

Calculation of Criteria Pollutant Emissions from Each Identical Unit

Compound	Emission Factor, lb/MMscf (1)	Maximum Hourly Emissions, lb/hr (2)	Maximum Daily Emissions, lb/day	Maximum Annual Emissions, lbs/yr	Annual Emissions, ton/yr (3)	All Units: Maximum Hourly Emissions, lb/hr	All Units: Maximum Daily Emissions, lb/day	All Units: Maximum Annual Emissions, lbs/yr	All Units: Annual Emissions, ton/yr
NOx	11.220	2.74E+00	9.59E+00	3.29E+03	1.65E+00	5.48E+00	1.92E+01	6.58E+03	3.29E+00
CO	18.360	4.48E+00	1.57E+01	5.39E+03	2.69E+00	8.96E+00	3.14E+01	1.08E+04	5.39E+00
VOC	5.508	1.34E+00	4.71E+00	1.62E+03	8.08E-01	2.69E+00	9.41E+00	3.23E+03	1.62E+00
SOx	3.060	7.47E-01	2.61E+00	8.98E+02	4.49E-01	1.49E+00	5.23E+00	1.80E+03	8.98E-01
PM10	5.100	1.25E+00	4.36E+00	1.50E+03	7.48E-01	2.49E+00	8.72E+00	2.99E+03	1.50E+00
PM2.5	5.100	1.25E+00	4.36E+00	1.50E+03	7.48E-01	2.49E+00	8.72E+00	2.99E+03	1.50E+00
	lbs/mmbtu								
CO2	116.95	2.91E+04	1.02E+05	3.50E+07	1.75E+04	5.82E+04	2.04E+05	7.00E+07	3.50E+04
Methane	0.0130	3.24E+00	1.13E+01	3.89E+03	1.95E+00	6.47E+00	2.27E+01	7.78E+03	3.89E+00
N2O	0.0002	5.49E-02	1.92E-01	6.60E+01	3.30E-02	1.10E-01	3.84E-01	1.32E+02	6.60E-02
CO2e									3.51E+04

Notes:

(1) natural gas criteria pollutant EF factors

(2) Based on maximum hourly boiler fuel use of 249 MMBtu/hr/boiler

and fuel HHV of 1020 Btu/scf gives 0.2441 MMscf/hr/boiler.

(3) Based on maximum annual boiler fuel use of 299,298 MMBtu/yr/boiler

and fuel HHV of 1020 Btu/scf gives 293.4294 MMscf/yr/boiler.

(4) LNBs with FGR and GCPs

(5) PM2.5 = PM10

(6) NG fuel S at 0.75 grains/100scf

Refs:

(1) EFs from Palen project team 11-15-12

(2) GHG EFs from CCAR General Protocol, January 2009.

Table 4.1A-1 Auxiliary Boilers #1 and #2 **Page 2**

Calculation of Criteria Pollutant Emissions for Boilers Firing Gaseous Fuels

Boiler Operation Mode: 12.5% Low Load Case

Ops Hr/Day: 1.7

Ops Hr/Yr: 580

# of Units: 2

Fuel Type: Nat Gas

Calculation of Criteria Pollutant Emissions from Each Identical Unit

Compound	Emission Factor, lb/MMscf (1)	Maximum Hourly Emissions, lb/hr (2)	Maximum Daily Emissions, lb/day	Maximum Annual Emissions, lbs/yr	Annual Emissions, ton/yr (3)	All Units Maximum Hourly Emissions, lb/hr	All Units Maximum Daily Emissions, lb/day	All Units Maximum Annual Emissions, lbs/yr	All Units Annual Emissions, ton/yr
NOx	11.220	3.42E-01	5.82E-01	1.98E+02	9.92E-02	6.84E-01	1.16E+00	3.97E+02	1.98E-01
CO	146.880	4.48E+00	7.61E+00	2.60E+03	1.30E+00	8.96E+00	1.52E+01	5.19E+03	2.60E+00
VOC	42.840	1.31E+00	2.22E+00	7.58E+02	3.79E-01	2.61E+00	4.44E+00	1.52E+03	7.58E-01
SOx	3.060	9.33E-02	1.59E-01	5.41E+01	2.71E-02	1.87E-01	3.17E-01	1.08E+02	5.41E-02
PM10	5.100	1.56E-01	2.64E-01	9.02E+01	4.51E-02	3.11E-01	5.29E-01	1.80E+02	9.02E-02
PM2.5	5.100	1.56E-01	2.64E-01	9.02E+01	4.51E-02	3.11E-01	5.29E-01	1.80E+02	9.02E-02
	lbs/mmbtu								
CO2	116.95	3.64E+03	6.18E+03	2.11E+06	1.05E+03	7.27E+03	1.24E+04	4.22E+06	2.11E+03
Methane	0.0130	4.04E-01	6.87E-01	2.34E+02	1.17E-01	8.09E-01	1.37E+00	4.69E+02	2.34E-01
N2O	0.0002	6.86E-03	1.17E-02	3.98E+00	1.99E-03	1.37E-02	2.33E-02	7.95E+00	3.98E-03
CO2e									2.12E+03

Notes:

(1) natural gas criteria pollutant EF factors

(2) Based on maximum hourly boiler fuel use of 31.1 MMBtu/hr/boiler and fuel HHV of 1020 Btu/scf gives 0.0305 MMscf/hr/boiler.

(3) Based on maximum annual boiler fuel use of 18,038 MMBtu/yr/boiler and fuel HHV of 1020 Btu/scf gives 17.6843 MMscf/yr/boiler.

(4) LNBs with FGR and GCPs

(5) PM2.5 = PM10

(6) NG fuel S at 0.75 grains/100scf

Refs:

(1) EFs from Palen project team 11-15-12

(2) GHG EFs from CCAR General Protocol, January 2009.

Table 4.1A-1 Aux Boiler Startup Emissions Estimates **Page 3**

			SU/yr:	348
Boiler Operation Mode:	Startup		# of Units:	2
Startup Period, hrs:	0.5	low load case	SU hrs/yr:	174
Remainder of SU hour:	0.5	assumed at low load Ops case (12.5% load) These emissions hours are accounted for under the low load Ops case.		

Emissions Factors:

Pollutant	SU lb/mmscf
Nox	89.76
CO	148.92
VOC	43.86
SOx	3.06
PM10/2.5	10.1
CO2e	117.285 lb/mmbtu (composite NG boiler factor)

Fuel use rate for SU low load case:

31.1	mmbtu/hr low load case hour
15.55	mmbtu per SU period
0.0152	mmscf per SU period

Startup Emissions Estimates

	Single Unit			All Units		
Pollutant	lbs/SU	lbs/yr	TPY	lbs/SU hr	lbs/yr	TPY
Nox	1.37	476.20	0.24	2.74	952.41	0.48
CO	2.27	790.06	0.40	4.54	1580.13	0.79
VOC	0.67	232.69	0.12	1.34	465.38	0.23
SOx	0.05	16.23	0.01	0.09	32.47	0.02
PM10/2.5	0.15	53.58	0.03	0.31	107.17	0.05
CO2e	1824	634676	317	3648	1269352	635

Startup Hour Emissions(0.5 hr SU and 0.5 hr low load)

	lbs/hr
Nox	1.54
CO	4.51
VOC	1.32
SOx	0.09
PM10/2.5	0.23
CO2e	3642

Notes:
1. EFs and ops data supplied by Palen project engineers, 11-15-12.
2. SU EFs derived from Hidden Hill Solar Project, Table 5.1B-2R, April 2012.

Table 4.1A-1 Aux Boiler Daily Emissions Estimates

Daily Emissions Estimate (SU, low load, high load)

Emissions Values by Load

	SU lbs/hr	Low lbs/hr	High lbs/hr
Nox	1.54	0.342	2.74
CO	4.51	4.48	4.48
VOC	1.32	1.31	1.34
SOx	0.09	0.0933	0.747
PM10	0.23	0.156	1.25
PM2.5	0.23	0.156	1.25

SU hour = 0.5 hr in SU mode plus 0.5 hr at low load
1 SU hr per day
1.7 hrs per day of low load ops
3.5 hrs per day of high load ops

Estimated Maximum Daily Emissions (each aux boiler)

	lbs/day
Nox	11.71
CO	27.81
VOC	8.24
SOx	2.86
PM10	4.87
PM2.5	4.87

Table 4.1A-2 Aux Boilers #1 and #2
Calculation of Hazardous Air Pollutant Emissions for Boilers Firing Gaseous Fuels

Boiler Operation Mode:	All modes-Annual		# of Units:	2
Max Hourly Fuel Use:	0.24412	mmscf	Fuel Type:	Nat Gas
Max Daily Fuel Use:	0.9765	mmscf at 4 hrs/day	Hrs/day:	4
Max Annual Fuel Use:	293.43	mmscf/yr	Hrs/Yr:	1956

Calculation of Hazardous Air Pollutant Emissions from Each Identical Unit

HAP	Emission Factor, lb/MMscf (1)	Maximum Hourly Emissions, lb/hr	Maximum Daily Emissions, lb/day	Maximum Annual Emissions, lbs/yr	Annual Emissions, ton/yr	All Units: Maximum Hourly Emissions, lb/hr	All Units: Maximum Daily Emissions, lb/day	All Units: Maximum Annual Emissions, lbs/yr	All Units: Annual Emissions, ton/yr
Acetaldehyde	9.00E-04	2.20E-04	8.79E-04	2.64E-01	1.32E-04	4.39E-04	1.76E-03	5.28E-01	2.64E-04
Acrolein	8.00E-04	1.95E-04	7.81E-04	2.35E-01	1.17E-04	3.91E-04	1.56E-03	4.69E-01	2.35E-04
Ammonia		0.00E+00	0.00E+00	0.00E+00	0.00E+00	0.00E+00	0.00E+00	0.00E+00	0.00E+00
Benzene	1.70E-03	4.15E-04	1.66E-03	4.99E-01	2.49E-04	8.30E-04	3.32E-03	9.98E-01	4.99E-04
1,3-Butadiene	0.00E+00	0.00E+00	0.00E+00	0.00E+00	0.00E+00	0.00E+00	0.00E+00	0.00E+00	0.00E+00
Ethylbenzene	2.00E-03	4.88E-04	1.95E-03	5.87E-01	2.93E-04	9.76E-04	3.91E-03	1.17E+00	5.87E-04
Formaldehyde	3.60E-03	8.79E-04	3.52E-03	1.06E+00	5.28E-04	1.76E-03	7.03E-03	2.11E+00	1.06E-03
Hexane	1.30E-03	3.17E-04	1.27E-03	3.81E-01	1.91E-04	6.35E-04	2.54E-03	7.63E-01	3.81E-04
Naphthalene	3.00E-04	7.32E-05	2.93E-04	8.80E-02	4.40E-05	1.46E-04	5.86E-04	1.76E-01	8.80E-05
PAHs (4)	1.00E-04	2.44E-05	9.77E-05	2.93E-02	1.47E-05	4.88E-05	1.95E-04	5.87E-02	2.93E-05
Propylene	1.55E-02	3.78E-03	1.51E-02	4.55E+00	2.27E-03	7.57E-03	3.03E-02	9.10E+00	4.55E-03
Propylene oxide	0.00E+00	0.00E+00	0.00E+00	0.00E+00	0.00E+00	0.00E+00	0.00E+00	0.00E+00	0.00E+00
Toluene	7.80E-03	1.90E-03	7.62E-03	2.29E+00	1.14E-03	3.81E-03	1.52E-02	4.58E+00	2.29E-03
Xylene	5.80E-03	1.42E-03	5.66E-03	1.70E+00	8.51E-04	2.83E-03	1.13E-02	3.40E+00	1.70E-03
		0.00E+00	0.00E+00	0.00E+00	0.00E+00	0.00E+00	0.00E+00	0.00E+00	0.00E+00
		0.00E+00	0.00E+00	0.00E+00	0.00E+00	0.00E+00	0.00E+00	0.00E+00	0.00E+00
		0.00E+00	0.00E+00	0.00E+00	0.00E+00	0.00E+00	0.00E+00	0.00E+00	0.00E+00
		0.00E+00	0.00E+00	0.00E+00	0.00E+00	0.00E+00	0.00E+00	0.00E+00	0.00E+00
		0.00E+00	0.00E+00	0.00E+00	0.00E+00	0.00E+00	0.00E+00	0.00E+00	0.00E+00
		0.00E+00	0.00E+00	0.00E+00	0.00E+00	0.00E+00	0.00E+00	0.00E+00	0.00E+00
		0.00E+00	0.00E+00	0.00E+00	0.00E+00	0.00E+00	0.00E+00	0.00E+00	0.00E+00
		0.00E+00	0.00E+00	0.00E+00	0.00E+00	0.00E+00	0.00E+00	0.00E+00	0.00E+00
		0.00E+00	0.00E+00	0.00E+00	0.00E+00	0.00E+00	0.00E+00	0.00E+00	0.00E+00

Notes:
(1) natural gas HAPs emission factors
(2) Fuel HHV 1020 btu/scf
(3) Polycyclic aromatic hydrocarbons, excluding naphthalene (treated separately).
(4) LNB with FGR and GCPs
(5) all fuel values based on full load equivalents per Palen Aux boiler data sheets

Refs: Efs derived from Hidden Hill Solar AFC, Table 5.1B-14R, April 2012

Rev. 2/27/2013

Table 4.1A-3 NTP Boilers #1 and #2
Calculation of Criteria Pollutant Emissions for Boilers Firing Gaseous Fuels

Boiler Operation Mode: Normal firing mode
Ops Hr/Day: 14 includes 1 hr SU (7)
Ops Hr/Yr: 4872 includes SU (7)

# of Units: 2
Fuel Type: Nat Gas

Calculation of Criteria Pollutant Emissions from Each Identical Unit

Compound	Emission Factor, lb/MMscf (1)	Maximum Hourly Emissions, lb/hr (2)	Maximum Daily Emissions, lb/day	Maximum Annual Emissions, lbs/yr	Annual Emissions, ton/yr (3)	All Units: Maximum Hourly Emissions, lb/hr	All Units: Maximum Daily Emissions, lb/day	All Units: Maximum Annual Emissions, lbs/yr	All Units: Annual Emissions, ton/yr
NOx	11.220	1.10E-01	1.54E+00	5.36E+02	2.68E-01	2.20E-01	3.08E+00	1.07E+03	5.36E-01
CO	37.332	3.66E-01	5.12E+00	1.78E+03	8.92E-01	7.32E-01	1.02E+01	3.57E+03	1.78E+00
VOC	5.508	5.40E-02	7.56E-01	2.63E+02	1.32E-01	1.08E-01	1.51E+00	5.26E+02	2.63E-01
SOx	0.943	9.25E-03	1.29E-01	4.50E+01	2.25E-02	1.85E-02	2.59E-01	9.01E+01	4.50E-02
PM10	5.100	5.00E-02	7.00E-01	2.44E+02	1.22E-01	1.00E-01	1.40E+00	4.87E+02	2.44E-01
PM2.5	5.100	5.00E-02	7.00E-01	2.44E+02	1.22E-01	1.00E-01	1.40E+00	4.87E+02	2.44E-01
	lbs/mmbtu								
CO2	116.95	1.17E+03	1.64E+04	5.70E+06	2.85E+03	2.34E+03	3.27E+04	1.14E+07	5.70E+03
Methane	0.0130	1.30E-01	1.82E+00	6.33E+02	3.17E-01	2.60E-01	3.64E+00	1.27E+03	6.33E-01
N2O	0.0002	2.21E-03	3.09E-02	1.07E+01	5.37E-03	4.41E-03	6.17E-02	2.15E+01	1.07E-02
CO2e									5.71E+03

Notes:
(1) natural gas criteria pollutant EF factors
(2) Based on maximum hourly boiler fuel use of 10 MMBtu/hr/boiler
and fuel HHV of 1020 Btu/scf gives 0.0098 MMscf/hr/boiler.
(3) Based on maximum annual boiler fuel use of 48,720 MMBtu/yr/boiler
and fuel HHV of 1020 Btu/scf gives 47.7647 MMscf/yr/boiler.
(4) LNBs with FGR and GCPs
(5) PM2.5 = PM10
(6) Fuel S at 0.75 grains/100 scf
(7) this unit is so small that SU hour emissions are considered to be equivalent to full load hourly emissions

Refs:
(1) EFs and Ops data from Palen project team NTP boiler data sheets
(2) GHG EFs from CCAR General Protocol, January 2009.

Table 4.1A-4 NTP Boilers #1 and #2
Calculation of Hazardous Air Pollutant Emissions for Boilers Firing Gaseous Fuels

Boiler Operation Mode:	All modes-Annual		# of Units:	2
Max Hourly Fuel Use:	0.009804	mmscf	Fuel Type:	Nat Gas
Max Daily Fuel Use:	0.1373	mmscf	Hrs/day:	14
Max Annual Fuel Use:	47.765	mmscf	Hrs/Yr:	4872

Calculation of Hazardous Air Pollutant Emissions from Each Identical Unit

HAP	Emission Factor, lb/MMscf (1)	Maximum Hourly Emissions, lb/hr	Maximum Daily Emissions, lb/day	Maximum Annual Emissions, lbs/yr	Annual Emissions, ton/yr	All Units: Maximum Hourly Emissions, lb/hr	All Units: Maximum Daily Emissions, lb/day	All Units: Maximum Annual Emissions, lbs/yr	All Units: Annual Emissions, ton/yr
Acetaldehyde	3.10E-03	3.04E-05	4.26E-04	1.48E-01	7.40E-05	6.08E-05	8.51E-04	2.96E-01	1.48E-04
Acrolein	2.70E-03	2.65E-05	3.71E-04	1.29E-01	6.45E-05	5.29E-05	7.41E-04	2.58E-01	1.29E-04
Ammonia		0.00E+00	0.00E+00	0.00E+00	0.00E+00	0.00E+00	0.00E+00	0.00E+00	0.00E+00
Benzene	5.80E-03	5.69E-05	7.96E-04	2.77E-01	1.39E-04	1.14E-04	1.59E-03	5.54E-01	2.77E-04
1,3-Butadiene	0.00E+00	0.00E+00	0.00E+00	0.00E+00	0.00E+00	0.00E+00	0.00E+00	0.00E+00	0.00E+00
Ethylbenzene	6.90E-03	6.76E-05	9.47E-04	3.30E-01	1.65E-04	1.35E-04	1.89E-03	6.59E-01	3.30E-04
Formaldehyde	1.23E-02	1.21E-04	1.69E-03	5.88E-01	2.94E-04	2.41E-04	3.38E-03	1.18E+00	5.88E-04
Hexane	4.60E-03	4.51E-05	6.32E-04	2.20E-01	1.10E-04	9.02E-05	1.26E-03	4.39E-01	2.20E-04
Naphthalene	3.00E-04	2.94E-06	4.12E-05	1.43E-02	7.16E-06	5.88E-06	8.24E-05	2.87E-02	1.43E-05
PAHs (4)	1.00E-04	9.80E-07	1.37E-05	4.78E-03	2.39E-06	1.96E-06	2.75E-05	9.55E-03	4.78E-06
Propylene	5.30E-01	5.20E-03	7.28E-02	2.53E+01	1.27E-02	1.04E-02	1.46E-01	5.06E+01	2.53E-02
Propylene oxide	0.00E+00	0.00E+00	0.00E+00	0.00E+00	0.00E+00	0.00E+00	0.00E+00	0.00E+00	0.00E+00
Toluene	2.65E-02	2.60E-04	3.64E-03	1.27E+00	6.33E-04	5.20E-04	7.28E-03	2.53E+00	1.27E-03
Xylene	1.97E-02	1.93E-04	2.70E-03	9.41E-01	4.70E-04	3.86E-04	5.41E-03	1.88E+00	9.41E-04
		0.00E+00	0.00E+00	0.00E+00	0.00E+00	0.00E+00	0.00E+00	0.00E+00	0.00E+00
		0.00E+00	0.00E+00	0.00E+00	0.00E+00	0.00E+00	0.00E+00	0.00E+00	0.00E+00
		0.00E+00	0.00E+00	0.00E+00	0.00E+00	0.00E+00	0.00E+00	0.00E+00	0.00E+00
		0.00E+00	0.00E+00	0.00E+00	0.00E+00	0.00E+00	0.00E+00	0.00E+00	0.00E+00
		0.00E+00	0.00E+00	0.00E+00	0.00E+00	0.00E+00	0.00E+00	0.00E+00	0.00E+00
		0.00E+00	0.00E+00	0.00E+00	0.00E+00	0.00E+00	0.00E+00	0.00E+00	0.00E+00
		0.00E+00	0.00E+00	0.00E+00	0.00E+00	0.00E+00	0.00E+00	0.00E+00	0.00E+00
		0.00E+00	0.00E+00	0.00E+00	0.00E+00	0.00E+00	0.00E+00	0.00E+00	0.00E+00
		0.00E+00	0.00E+00	0.00E+00	0.00E+00	0.00E+00	0.00E+00	0.00E+00	0.00E+00

Notes:
(1) natural gas HAPs emission factors
(2) Fuel HHV 1020 btu/scf
(3) Polycyclic aromatic hydrocarbons, excluding naphthalene (treated separately).
(4) LNB with FGR and GCPs

Refs: Efs derived from Hidden Hills AFC, Table 5.1B-16R, April 2012

Rev. 2/27/2013

Table 4.1A-5 EXPECTED INTERNAL COMBUSTION ENGINE EMISSIONS

Liquid Fuel

Large Emergency Generators

# of Identical Engines: 2

Mfg:	Caterpillar	
Engine #:	3516C or equiv.	
Kw	2500	approx.
BHP:	3633	
RPM:	-	
Fuel:	#2 Diesel	
Fuel Use:	175	Gph (1)
FuelHHV	139000	Btu/gal
mmbtu/hr	24.33	HHV
EPA Tier:	4	

Stack Data

Height:	20	Ft.
Diameter:	1.67	Ft.
Temp:	925	deg F
ACFM:	19600	

input the mfg ACFM or calculate per Exhaust sheet)

Area:	2.190	Sq.Ft.
Velocity:	149	Ft/Sec
Max Daily Op Hrs:	1	
Max Annual Op Hrs:	199	

Fuel Wt:	6.9	Lbs/gal
Fuel S:	0.0015	% wt.
Fuel S:	0.1035	Lbs/1000 gal
SO2:	0.207	Lbs/1000 gal

			Single Engine				*All Engines*			
EFs (g/bhp-hr) (5)			**Lb/Hr**	**Lb/Day**	**Lbs/Yr**	**Tons/Yr**	*Lb/Hr*	*Lb/Day*	*Lbs/Yr*	*Tons/Yr*
NOx	0.59		4.72	4.72	939.54	0.470	*9.44*	*9.44*	*1879.08*	*0.94*
CO	0.03		0.24	0.24	47.77	0.024	*0.48*	*0.48*	*95.55*	*0.05*
VOC	0.01		0.08	0.08	15.92	0.008	*0.16*	*0.16*	*31.85*	*0.016*
PM10	0.03	(2,3)	0.24	0.24	47.77	0.024	*0.48*	*0.48*	*95.55*	*0.048*
SOx	NA		0.04	0.04	7.21	0.0036	*0.07*	*0.07*	*14.42*	*0.007*
	lbs/gal (4)									
CO2	22.38		3917	3917	779384	390	*7833*	*7833*	*1558767*	*779*
Methane	0.00066		0.12	0.12	22.98	0.011	*0.23*	*0.23*	*45.97*	*0.023*
N2O	0.00022		0.04	0.04	7.66	0.0038	*0.08*	*0.08*	*15.32*	*0.0077*
CO2e						391.1				*782.2*

Notes:

1. fuel consumption based on 0.055 gal/hp-hr (avg EPA and SCAQMD values) if no value given by mfg for specific engine.
2. PM10 equals PM2.5.
3. PM10 used in HRA to represent DPM emissions.
4. GHG EFs from CCAR General Protocol, January 2009.
5. EFs from Cat data sheet (nominal emissions values), EPD0028-E, Oct 2011.

Table 4.1A-5 EXPECTED INTERNAL COMBUSTION ENGINE EMISSIONS

Liquid Fuel

Small Emergency Generator

# of Identical Engines: 1

Mfg:	Caterpillar	
Engine #:	C9	
Kw	250	approx.
BHP:	398	
RPM:	-	
Fuel:	#2 Diesel	
Fuel Use:	20	Gph (1)
FuelHHV	139000	Btu/gal
mmbtu/hr	2.78	HHV
EPA Tier:	3	

Stack Data

Height:	16	Ft.
Diameter:	0.583	Ft.
Temp:	855	deg F
ACFM:	2250	

input the mfg ACFM or calculate per Exhaust sheet)

Area:	0.267	Sq.Ft.
Velocity:	140	Ft/Sec
Max Daily Op Hrs:	1	
Max Annual Op Hrs:	199	

Fuel Wt:	6.9	Lbs/gal
Fuel S:	0.0015	% wt.
Fuel S:	0.1035	Lbs/1000 gal
SO2:	0.207	Lbs/1000 gal

			Single Engine				*All Engines*			
EFs (g/bhp-hr) (5)			**Lb/Hr**	**Lb/Day**	**Lbs/Yr**	**Tons/Yr**	***Lb/Hr***	***Lb/Day***	***Lbs/Yr***	***Tons/Yr***
NOx	2.97		2.60	2.60	518.13	0.259	*2.60*	*2.60*	*518.13*	*0.26*
CO	0.36		0.32	0.32	62.80	0.031	*0.32*	*0.32*	*62.80*	*0.03*
VOC	0.1		0.09	0.09	17.45	0.009	*0.09*	*0.09*	*17.45*	*0.009*
PM10	0.079	(2,3)	0.07	0.07	13.78	0.007	*0.07*	*0.07*	*13.78*	*0.007*
SOx	NA		0.00	0.00	0.82	0.0004	*0.00*	*0.00*	*0.82*	*0.000*
	lbs/gal (4)									
CO2	22.38		448	448	89072	45	*448*	*448*	*89072*	*45*
Methane	0.00066		0.01	0.01	2.63	0.001	*0.01*	*0.01*	*2.63*	*0.001*
N2O	0.00022		0.00	0.00	0.88	0.0004	*0.00*	*0.00*	*0.88*	*0.0004*
CO2e						44.7				*44.7*

Notes:

1. fuel consumption based on 0.055 gal/hp-hr (avg EPA and SCAQMD values) if no value given by mfg for specific engine.
2. PM10 equals PM2.5.
3. PM10 used in HRA to represent DPM emissions.
4. GHG EFs from CCAR General Protocol, Janaury 2009.
5. EFs from Cat data sheet (nominal emissions values) 17804067, June 2011.

Table 4.1A-6 EXPECTED INTERNAL COMBUSTION ENGINE EMISSIONS

Liquid Fuel

# of Identical Engines: 2

Large Emergency Fire Pumps

Mfg:	Clarke/John Deere	
Engine #:	JX6H-UFAD88	
Kw	0	approx.
BHP:	617	
RPM:	1750	
Fuel:	#2 Diesel	
Fuel Use:	34	Gph (1)
FuelHHV	139000	Btu/gal
mmbtu/hr	4.73	HHV
EPA Tier:	3	

Stack Data

Height:	20	Ft.
Diameter:	0.67	Ft.
Temp:		deg F
ACFM:		

input the mfg ACFM or calculate per Exhaust sheet)

Area:	0.353	Sq.Ft.
Velocity:	0	Ft/Sec
Max Daily Op Hrs:	1	
Max Annual Op Hrs:	199	

Fuel Wt:	6.9	Lbs/gal
Fuel S:	0.0015	% wt.
Fuel S:	0.1035	Lbs/1000 gal
SO2:	0.207	Lbs/1000 gal

			Single Engine				*All Engines*			
EFs (g/bhp-hr) (5)			**Lb/Hr**	**Lb/Day**	**Lbs/Yr**	**Tons/Yr**	***Lb/Hr***	***Lb/Day***	***Lbs/Yr***	***Tons/Yr***
NOx	2.6		3.53	3.53	703.16	0.352	*7.07*	*7.07*	*1406.33*	*0.70*
CO	0.5		0.68	0.68	135.22	0.068	*1.36*	*1.36*	*270.45*	*0.14*
VOC	0.1		0.14	0.14	27.04	0.014	*0.27*	*0.27*	*54.09*	*0.027*
PM10	0.09	(2,3)	0.12	0.12	24.34	0.012	*0.24*	*0.24*	*48.68*	*0.024*
SOx	NA		0.007	0.007	1.40	0.0007	*0.01*	*0.01*	*2.80*	*0.0014*
	lbs/gal (4)									
CO2	22.38		761	761	151423	76	*1522*	*1522*	*302846*	*151*
Methane	0.00066		0.022	0.022	4.47	0.002	*0.045*	*0.045*	*8.93*	*0.004*
N2O	0.00022		0.007	0.007	1.49	0.0007	*0.015*	*0.015*	*2.98*	*0.0015*
CO2e						76.0				*152.0*

Notes:

1. fuel consumption based on 0.055 gal/hp-hr (avg EPA and SCAQMD values) if no value given by mfg for specific engine.
2. PM10 equals PM2.5.
3. PM10 used in HRA to represent DPM emissions.
4. GHG EFs from CCAR General Protocol, Janaury 2009.
5. EFs derived from Clarke data sheet JDPS 4/21/2012. Rated emissions data.

Table 4.1A-6 EXPECTED INTERNAL COMBUSTION ENGINE EMISSIONS

Liquid Fuel

# of Identical Engines: 1

Common Area Emergency Fire Pump

Mfg:	Cummins	
Engine #:	JX6H-UFAD88	
Kw	0	approx.
BHP:	617	
RPM:	1750	
Fuel:	#2 Diesel	
Fuel Use:	34	Gph (1)
FuelHHV	139000	Btu/gal
mmbtu/hr	4.73	HHV
EPA Tier:	3	

Stack Data

Height:	20	Ft.
Diameter:	0.67	Ft.
Temp:		deg F
ACFM:		

input the mfg ACFM or calculate per Exhaust sheet)

Area:	0.353	Sq.Ft.
Velocity:	0	Ft/Sec
Max Daily Op Hrs:	1	
Max Annual Op Hrs:	199	

Fuel Wt:	6.9	Lbs/gal
Fuel S:	0.0015	% wt.
Fuel S:	0.1035	Lbs/1000 gal
SO2:	0.207	Lbs/1000 gal

			Single Engine				*All Engines*			
EFs (g/bhp-hr) (5)			**Lb/Hr**	**Lb/Day**	**Lbs/Yr**	**Tons/Yr**	***Lb/Hr***	***Lb/Day***	***Lbs/Yr***	***Tons/Yr***
NOx	2.6		3.53	3.53	703.16	0.352	*3.53*	*3.53*	*703.16*	*0.35*
CO	0.5		0.68	0.68	135.22	0.068	*0.68*	*0.68*	*135.22*	*0.07*
VOC	0.1		0.14	0.14	27.04	0.014	*0.14*	*0.14*	*27.04*	*0.014*
PM10	0.09	(2,3)	0.12	0.12	24.34	0.012	*0.12*	*0.12*	*24.34*	*0.012*
SOx	NA		0.007	0.007	1.40	0.0007	*0.01*	*0.01*	*1.40*	*0.0007*
	lbs/gal (4)									
CO2	22.38		761	761	151423	76	*761*	*761*	*151423*	*76*
Methane	0.00066		0.022	0.022	4.47	0.002	*0.022*	*0.022*	*4.47*	*0.002*
N2O	0.00022		0.007	0.007	1.49	0.0007	*0.007*	*0.007*	*1.49*	*0.0007*
CO2e						76.0				*76.0*

Notes:

1. fuel consumption based on 0.055 gal/hp-hr (avg EPA and SCAQMD values) if no value given by mfg for specific engine.
2. PM10 equals PM2.5.
3. PM10 used in HRA to represent DPM emissions.
4. GHG EFs from CCAR General Protocol, January 2009.
5. EFs derived from Clarke data sheet JDPS 4/21/2012. Rated emissions data.

Table 4.1A-7 Wet SAC #1 and #2 Emissions Estimates

Wet SAC Particulate Emissions

				Per Wet SAC	Per Cell	All WSACs
# of Identical WSACs:	2					
Operational Schedule:	Hrs/day	Days/Yr	Hrs/Yr			
	12	n/a	2000			
Cells per WSAC:	4					
Pumping rate of recirculation pumps (gal/min)				4,000.0		
Flow of cooling water (lbs/hr)				1,999,200.0		
Avg TDS of circ water (mg/l or ppmw)				1,500.0		
Flow of dissolved solids (lbs/hr)				2998.80		
Fraction of flow producing drift*				1.00		
Control efficiency of drift eliminators, %	0.0005			0.000005		
Calculated drift rate (lbs water/hr)				10.0		
PM10 emissions (lbs/hr)				**0.015**	**0.004**	**0.030**
PM10 emissions (lbs/day)				**0.180**	**0.045**	**0.360**
PM10 emissions (tpy)				**0.015**	**0.004**	**0.030**
PM2.5 fraction of PM10				1.00		
PM2.5 emissions (lbs/hr)				**0.015**	**0.004**	**0.030**
PM2.5 emissions (lbs/day)				**0.180**	**0.045**	**0.360**
PM2.5 emissions (tpy)				**0.015**	**0.004**	**0.030**

Notes:
Based on Method AP 42, Section 13.4, Jan 1995
*Technical Report EPA-600-7-79-251a, Page 63
Effects of Pathogenic and Toxic Materials Transported Via Cooling Device Drift - Volume 1.

Table 4.1A-8
Calculation of Hazardous and Toxic Pollutant Emissions from Wet SACs

Cells per Wet SAC: 4 Max Tower Drift Rate: 10 lbs/hr Op Hrs/Day: 12
# of Identical WSACs: 2 Op Hrs/Yr: 2000

Constituent	Concentration in Cooling Tower Water		Total Single Tower Emissions, lb/hr	Total Single Tower Emissions, lb/day	Total Single Tower Emissions, ton/yr	Single Cell Emissions, lb/hr	Single Cell Emissions, lb/day	Single Cell Emissions, ton/yr	Total All Towers Emissions, lb/hr	Total All Towers Emissions, lb/day	Total All Towers Emissions, ton/yr
Ammonia	0	ppm	0.00E+00	0.00E+00	0.00E+00	0.00E+00	0.00E+00	0.00E+00	0.00E+00	0.00E+00	0.00E+00
Copper	0.01	ppm	1.00E-07	1.20E-06	1.00E-07	2.50E-08	3.00E-07	2.50E-08	2.00E-07	2.40E-06	2.00E-07
Silver	0	ppm	0.00E+00	0.00E+00	0.00E+00	0.00E+00	0.00E+00	0.00E+00	0.00E+00	0.00E+00	0.00E+00
Zinc	0	ppm	0.00E+00	0.00E+00	0.00E+00	0.00E+00	0.00E+00	0.00E+00	0.00E+00	0.00E+00	0.00E+00
Arsenic	0	ppm	0.00E+00	0.00E+00	0.00E+00	0.00E+00	0.00E+00	0.00E+00	0.00E+00	0.00E+00	0.00E+00
Beryllium	0.0025	ppm	2.50E-08	3.00E-07	2.50E-08	6.25E-09	7.50E-08	6.25E-09	5.00E-08	6.00E-07	5.00E-08
Cadmium	0	ppm	0.00E+00	0.00E+00	0.00E+00	0.00E+00	0.00E+00	0.00E+00	0.00E+00	0.00E+00	0.00E+00
Chromium	0	ppm	0.00E+00	0.00E+00	0.00E+00	0.00E+00	0.00E+00	0.00E+00	0.00E+00	0.00E+00	0.00E+00
Lead	0	ppm	0.00E+00	0.00E+00	0.00E+00	0.00E+00	0.00E+00	0.00E+00	0.00E+00	0.00E+00	0.00E+00
Mercury	0	ppm	0.00E+00	0.00E+00	0.00E+00	0.00E+00	0.00E+00	0.00E+00	0.00E+00	0.00E+00	0.00E+00
Nickel	0	ppm	0.00E+00	0.00E+00	0.00E+00	0.00E+00	0.00E+00	0.00E+00	0.00E+00	0.00E+00	0.00E+00
Vanadium	0	ppm	0.00E+00	0.00E+00	0.00E+00	0.00E+00	0.00E+00	0.00E+00	0.00E+00	0.00E+00	0.00E+00
Barium	0	ppm	0.00E+00	0.00E+00	0.00E+00	0.00E+00	0.00E+00	0.00E+00	0.00E+00	0.00E+00	0.00E+00
Cobalt	0	ppm	0.00E+00	0.00E+00	0.00E+00	0.00E+00	0.00E+00	0.00E+00	0.00E+00	0.00E+00	0.00E+00
Antimony	0	ppm	0.00E+00	0.00E+00	0.00E+00	0.00E+00	0.00E+00	0.00E+00	0.00E+00	0.00E+00	0.00E+00
Thallium	0	ppm	0.00E+00	0.00E+00	0.00E+00	0.00E+00	0.00E+00	0.00E+00	0.00E+00	0.00E+00	0.00E+00
Molybdenum	0	ppm	0.00E+00	0.00E+00	0.00E+00	0.00E+00	0.00E+00	0.00E+00	0.00E+00	0.00E+00	0.00E+00
	0	ppm	0.00E+00	0.00E+00	0.00E+00	0.00E+00	0.00E+00	0.00E+00	0.00E+00	0.00E+00	0.00E+00
	0	ppm	0.00E+00	0.00E+00	0.00E+00	0.00E+00	0.00E+00	0.00E+00	0.00E+00	0.00E+00	0.00E+00
	0	ppm	0.00E+00	0.00E+00	0.00E+00	0.00E+00	0.00E+00	0.00E+00	0.00E+00	0.00E+00	0.00E+00

Notes:
(1) Water analysis data supplied by project applicant. See support data on next page.
(2) analysis values for 800 bgs well
(3) mg/l = ppmw

Table 4.1A-9 Palen Solar Mirror Washing Activity Emissions

Activity Schedule:

Days/yr:	365
Hrs/day:	20

Data supplied by Palen project engineers, 11-15-12.
*East and West power sites combined w/o TES.

Input Values

FFT MWM Ops:

# of vehicles on site:*	24
HP/each unit:	310
Fuel use, gal/hr/FFT:	17.6
Fuel use, gal/day/FFT:	352
VMT/yr/FFT:	2700
2013 On-road certified engines	
Fuel type:	Std Diesel

NT MWM Ops:

# of vehicles on site:*	2
HP/each unit:	145
Fuel use, gal/hr/FFT:	8.8
Fuel use, gal/day/FFT:	176
VMT/yr/FFT:	4000
Tier 4 certified non-road engines	
Fuel type:	Std Diesel

*Calculated Values**

Total VMT/year:	64800
Total Ops hrs/yr:	7300
Fuel use, 10^3 gal/yr:	3083.52

Total VMT/year:	8000
Total Ops hrs/yr:	7300
Fuel use, 10^3 gal/yr:	128.48
Total bhp-hr/yr:	2117000

Emissions Factors

Pollutant	gm/VMT	
Nox	2.332	
CO	2.027	
VOC	0.951	
SO2	0.21	lb/10^3 gal
PM10/2.5	0.038	
CO2e	22.51	composite lbs/gal per CCAR, 1/09, Ver 3.1, Tables C.5 and C.6.

Pollutant	gm/bhp-hr	
Nox	0.276	
CO	0.087	
VOC	0.1314	
SO2	0.21	lb/10^3 gal
PM10/2.5	0.0092	

Emissions Estimates-By MWM Type

Pollutant	lbs/hr	lbs/day	lbs/yr	TPY
Nox	0.0456	0.91	333.2	0.167
CO	0.0397	0.79	289.6	0.145
VOC	0.0186	0.37	135.9	0.068
SO2	0.0887	1.77	647.5	0.324
PM10/2.5	0.0007	0.01	5.4	0.003
CO2e				34705

Pollutant	lbs/hr	lbs/day	lbs/yr	TPY
Nox	0.1765	3.53	1288.2	0.644
CO	0.0556	1.11	406.0	0.203
VOC	0.0840	1.68	613.3	0.307
SO2	0.0037	0.07	27.0	0.013
PM10/2.5	0.0059	0.12	42.9	0.021
CO2e				1446

Total Facility Emissions Estimates

Pollutant	lbs/hr	lbs/day	lbs/yr	TPY
Nox	0.222	4.442	1621.300	0.811
CO	0.095	1.906	695.625	0.348
VOC	0.103	2.052	749.132	0.375
SO2	0.092	1.848	674.520	0.337
PM10/2.5	0.007	0.133	48.367	0.024
CO2e				36151

Fugitive Dust Emissions for MWM Activities

PM10, lb/VMT:	0.3
PM2.5, lb/VMT:	0.03

PM10, lb/VMT:	0.17
PM2.5, lb/VMT:	0.02

Emissions Estimates-By MWM Type

Pollutant	lbs/hr	lbs/day	lbs/yr	TPY
PM10	2.663	53.26	19440	9.72
PM2.5	0.266	5.33	1944	0.97

Pollutant	lbs/hr	lbs/day	lbs/yr	TPY
PM10	0.186	3.73	1360	0.68
PM2.5	0.020	0.40	146	0.073

Total Facility Emissions Estimates-Fugitive Dust

Pollutant	lbs/hr	lbs/day	lbs/yr	TPY
PM10	2.85	56.99	20800.00	10.40
PM2.5	0.29	5.73	2090.00	1.05

Table 4.1A-10 Onsite Operations Support Vehicle Emissions

Ref: Riverside County, Emfac 2007, V2.3, Nov 2006
LDTs (1970-2014)

Emissions data on this page is for both power block units, i.e., the entire facility.

Onsite Operations Support Vehicle Use Data

Vehicle Type:	LDT (gasoline)	
# of Vehicles used on facility:	8	
Avg VMT/day/vehicle:	50	
Total daily VMT:	400	
Total Annual VMT:	146000	
% of Annual VMT on unpaved roads:	30	0.30
% of Annual VMT on paved roads:	70	0.70
Annual VMT on unpaved roads:	43800	
Annual VMT on paved roads:	102200	

Emissions Factors (lbs/vmt)

NOx	CO	VOC	SOx	PM10	CO2	
0.000684	0.00677	0.000567	0.00001	0.000107	1.0893	LDT

Daily Emissions (lbs)

NOx	**CO**	**VOC**	**SOx**	**PM10**	**CO2**	**PM2.5**	
0.2736	2.7080	0.2268	0.0040	0.0428	435.7200	0.0424	LDT

Tons per Year

0.0499	0.4942	0.0414	0.0007	0.0078	79.5189	0.0077	LDT

Fugitive Dust Emissions from Onsite Support Vehicle Use

Avg Unpaved road PM10 EF, lbs/VMT:	0.197	(1)
Avg PM2.5 fraction of PM10:	0.212	per CARB CEIDARS, 2011
Avg Unpaved road PM2.5 EF, lbs/VMT:	0.041764	

Unpaved Road Fugitive Emissions

	lbs/day	lbs/yr	TPY
PM10	23.64	8628.6	4.31
PM2.5	5.01	1829.3	0.91

Avg Paved road PM10 EF, lbs/VMT:	0.0009	(1)
Avg PM2.5 fraction of PM10:	0.169	per CARB CEIDARS, 2011
Avg Paved road PM2.5 EF, lbs/VMT:	0.0001521	

Paved Road Fugitive Emissions

	lbs/day	lbs/yr	TPY
PM10	0.25	92.0	0.046
PM2.5	0.04	15.5	0.008

Notes:

1. fugitive dust factors for paved and unpaved roads from PSPP Appendix E.3, Tables E.3-7b and E.3-8c, 2009.
   (assumes unpaved onsite and offsite access roads have been stabilized or watered, and speed is controlled)
   (assumes paved road areas are periodically cleaned and speed is controlled)

Table 4.1A-10 Onsite Operations Support Vehicle Emissions

Ref: Riverside County, Emfac 2007, V2.3, Nov 2006
HDDTs (1970-2014)

Emissions data on this page is for both power block units, i.e., the entire facility.

Onsite Operations Support Vehicle Use Data

			Emissions Factors (lbs/vmt)							
			NOx	CO	VOC	SOx	PM10	CO2		
Vehicle Type:	HDDT (water trucks)		0.020568	0.006521	0.001482	0.000037	0.000958	4.0073	HDDT	
# of Vehicles used on facility:	4									
Avg VMT/day/vehicle:	50				Daily Emissions (lbs)					
Total daily VMT:	200		**NOx**	**CO**	**VOC**	**SOx**	**PM10**	**CO2**	**PM2.5**	
Total Annual VMT:	73000		4.1136	1.3042	0.2964	0.0074	0.1916	801.4600	0.1899	HDDT
% of Annual VMT on unpaved roads:	95	0.95								
% of Annual VMT on paved roads:	5	0.05			Tons per Year					
Annual VMT on unpaved roads:	69350		0.7507	0.2380	0.0541	0.0014	0.0350	146.2665	0.0347	HDDT
Annual VMT on paved roads:	3650									

Fugitive Dust Emissions from Onsite Support Vehicle Use

Avg Unpaved road PM10 EF, lbs/VMT:	0.197	(1)
Avg PM2.5 fraction of PM10:	0.212	per CARB CEIDARS, 2011
Avg Unpaved road PM2.5 EF, lbs/VMT:	0.041764	

Unpaved Road Fugitive Emissions

	lbs/day	lbs/yr	TPY
PM10	37.43	13662.0	6.83
PM2.5	7.94	2896.3	1.45

Avg Paved road PM10 EF, lbs/VMT:	0.0009	(1)
Avg PM2.5 fraction of PM10:	0.169	per CARB CEIDARS, 2011
Avg Paved road PM2.5 EF, lbs/VMT:	0.0001521	

Paved Road Fugitive Emissions

	lbs/day	lbs/yr	TPY
PM10	0.009	3.3	0.0016
PM2.5	0.002	0.6	0.0003

Notes:

1. fugitive dust factors for paved and unpaved roads from PSPP Appendix E.3, Tables E.3-7b and E.3-8c, 2009.
   (assumes unpaved onsite and offsite access roads have been stabilized or watered, and speed is controlled)
   (assumes paved road areas are periodically cleaned and speed is controlled)
2. max water truck speed is 5 mph, at 10 hrs/day, = 50 VMT/day

Table 4.1A-11 Offsite Operations Delivery and Commute Emissions

Ref: Riverside County, Emfac 2007, V2.3, Nov 2006
MDGT and HDDT (1970-2014)

Operations Site Delivery Emissions

Deliveries per Avg Month:	46	
Per trip delivery VMT:	75	
Total monthly VMT:	3450	
Total annual VMT:	41400	
Fraction annual VMT (MDGT):	0.5	
Fraction annual VMT (HDDT):	0.5	Daily VMT*
Annual gasoline VMT:	20700	80
Annual diesel VMT:	20700	80

*Daily VMT based on 260 days/year.

Emissions Factors (lbs/vmt)

NOx	CO	VOC	SOx	PM10	CO2	
0.02057	0.006521	0.001482	0.000037	0.000958	4.0073	HDDT
0.001246	0.00818	0.000772	0.000015	0.000108	1.4979	MDGT

Daily Emissions (lbs)

NOx	**CO**	**VOC**	**SOx**	**PM10**	**CO2**	**PM2.5**	
1.6377	0.5192	0.1180	0.0029	0.0763	319.0427	0.0756	HDDT
0.0992	0.6513	0.0615	0.0012	0.0086	119.2559	0.0085	MDGT

Tons per Year

0.2129	0.0675	0.0153	0.0004	0.0099	41.4756	0.0098	HDDT
0.0129	0.0847	0.0080	0.0002	0.0011	15.5033	0.0011	MDGT

Employee Commute Emissions

Ref: Riverside County, Emfac 2007, V2.3, Nov 2006
LDP/LDT (1970-2014)

# of FTE's:	120
Avg Commute VMT/day roundtrip):	75 (1)
Carpool ratio:	1.2
Avg Daily VMT:	7500
Avg Annual VMT:	2737500

(1) commute from Blythe regional area

Emissions Factors (lbs/vmt)

NOx	CO	VOC	SOx	PM10	CO2
0.00049	0.00548	0.00047	0.00001	0.00009	0.95934

Daily Emissions (lbs)

NOx	CO	VOC	SOx	PM10	CO2
3.68	41.10	3.53	0.08	0.68	7195.05

Tons per Year

NOx	CO	VOC	SOx	PM10	CO2
0.67	7.50	0.64	0.01	0.12	1313.10

Table 4.1A-12

FIXED ROOF TANK EMISSION CALCULATION

Reference: AP-42, Section 7.1, 9/97

Emissions Scenario

X : PTE

: Actual

***** Input *****					
Number of Similar Tanks:	3	Year:	Any		
Stored Substance ID:	Diesel Fuel	Tank Cap.	8000	gallons	
Tank ID:	n/a	Kn =	842.1	* Eq 41	
Vapor Molecular Wt.:	130	Table 6*			
Vapor Pressure (psia):	0.00648	Table 6*			
Tank Diameter (ft):	5	or equivalent diameter if tank is not round			
Tank Height/Length (ft):	16				
Avg. Vapor Space Height (ft):	2				
Avg. Diurnal Temp Change (degF):	28	Table 4 (Phoenix data used to simulate site)*			
Paint Factor:	1				
Small Tank Adj. Factor:	1				
Product Factor:	1	* Section 19.1.2.2.3.3			
Turnover Factor:	0.20				
Throughput (gals/yr):	1200000				

Intermediate Calculations

TP =	1200.00
Q =	0.01
D =	16.19
H =	1.42
T =	5.29

***** Output *****	Single Tank	All Tanks
Uncontrolled Emissions		
Breathing Loss (lb/yr):	1.87	5.62
Working Loss (lb/yr):	4.91	14.72
Total VOC Losses (lb/yr):	6.78	20.34
Controlled Emissions		
Control System Eff. (frac):	0	0
Total VOC Losses (lb/yr):	6.78	20.34
(lb/day):	0.0186	0.0557
(lb/hr):	0.0008	0.0023
(TPY):	0.0034	0.0102

Additional References: *API Bulletin #2518, October 1991

ConVault or equivalent (above ground vault type tanks)

Table 4.1A-13 Palen Source Emissions Summary **2 Pages**

(Before using the values on this table, the notes presented below should be carefully considered.)

	lbs/hr						lbs/day						TPY						
Source	**NOx**	**CO**	**VOC**	**SOx**	**PM10**	**PM2.5**	**NOx**	**CO**	**VOC**	**SOx**	**PM10**	**PM2.5**	**NOx**	**CO**	**VOC**	**SOx**	**PM10**	**PM2.5**	**CO2e**
aux blr 1 high	2.74	4.48	1.34	0.747	1.25	1.25	11.71	27.81	8.24	2.86	4.87	4.87	1.65	2.69	0.808	0.449	0.748	0.748	17550
aux blr 1 low	0.342	4.48	1.31	0.0933	0.156	0.156	0	0	0	0	0	0	0.0992	1.3	0.379	0.0271	0.0451	0.0451	1060
aux blr 1 SU	1.54	4.51	1.32	0.09	0.23	0.23	0	0	0	0	0	0	0.24	0.4	0.12	0.01	0.03	0.03	317
aux blr 2 high	2.74	4.48	1.34	0.747	1.25	1.25	11.71	27.81	8.24	2.86	4.87	4.87	1.65	2.69	0.808	0.449	0.748	0.748	17550
aux blr 2 low	0.342	4.48	1.31	0.0933	0.156	0.156	0	0	0	0	0	0	0.0992	1.3	0.379	0.0271	0.0451	0.0451	1060
aux blr 2 SU	1.54	4.51	1.32	0.09	0.23	0.23	0	0	0	0	0	0	0.24	0.4	0.12	0.01	0.03	0.03	317
ntp blr 1	0.11	0.366	0.054	0.00925	0.05	0.05	1.54	5.12	0.756	0.129	0.7	0.7	0.286	0.892	0.132	0.0225	0.122	0.122	2855
ntp blr 2	0.11	0.366	0.054	0.00925	0.05	0.05	1.54	5.12	0.756	0.129	0.7	0.7	0.286	0.892	0.132	0.0225	0.122	0.122	2855
L-EGS-1	4.72	0.24	0.08	0.04	0.24	0.24	4.72	0.24	0.08	0.04	0.24	0.24	0.47	0.024	0.008	0.0036	0.024	0.024	391.1
L-EGS-2	4.72	0.24	0.08	0.04	0.24	0.24	4.72	0.24	0.08	0.04	0.24	0.24	0.47	0.024	0.008	0.0036	0.024	0.024	391.1
S-EGS	2.6	0.32	0.09	0.001	0.07	0.07	2.6	0.32	0.09	0.001	0.07	0.07	0.259	0.031	0.009	0.0004	0.007	0.007	44.7
L-FP-1	3.53	0.68	0.14	0.007	0.12	0.12	3.53	0.68	0.14	0.007	0.12	0.12	0.352	0.068	0.014	0.0007	0.012	0.012	76
L-FP-2	3.53	0.68	0.14	0.007	0.12	0.12	3.53	0.68	0.14	0.007	0.12	0.12	0.352	0.068	0.014	0.0007	0.012	0.012	76
S-FP	3.53	0.68	0.14	0.007	0.12	0.12	3.53	0.68	0.14	0.007	0.12	0.12	0.352	0.068	0.014	0.0007	0.012	0.012	76
WSAC 1	0	0	0	0	0.015	0.015	0	0	0	0	0.18	0.18	0	0	0	0	0.015	0.015	0
WSAC 2	0	0	0	0	0.015	0.015	0	0	0	0	0.18	0.18	0	0	0	0	0.015	0.015	0
Diesel tanks	0	0	0.0023	0	0	0	0	0	0.0557	0	0	0	0	0	0.0102	0	0	0	0
MWMs Exhaust	0.222	0.095	0.103	0.092	0.007	0.007	4.442	1.906	2.052	1.848	0.133	0.133	0.811	0.348	0.375	0.337	0.024	0.024	36151
MWM Fug Dust	0	0	0	0	2.85	0.29	0	0	0	0	56.99	5.73	0	0	0	0	10.4	1.05	0
LDT Exhaust	0.0114	0.1128	0.00945	0	0.00178	0.00177	0.274	2.708	0.2268	0.004	0.0428	0.0424	0.0499	0.4942	0.0414	0.0007	0.0078	0.0077	79.52
LDT Fug Dust	0	0	0	0	0.9954	0.21	0	0	0	0	23.89	5.05	0	0	0	0	4.36	0.92	0
Water Trks Exhaust	0.1714	0.0543	0.0124	0	0.00798	0.00791	4.114	1.3042	0.2964	0.0074	0.1916	0.1899	0.7507	0.238	0.0541	0.0014	0.035		146.3
Water Trk Fug Dust	0	0	0	0	1.574	0.331	0	0	0	0	37.44	7.94	0	0	0	0	6.84	1.45	0
Max Sum Total	32.50	30.77	8.85	2.07	9.75	5.16	57.96	74.62	21.29	7.94	131.10	31.50	8.42	11.93	3.43	1.37	23.68	5.46	80996

	lbs/hr						lbs/day						TPY						
	NOx	**CO**	**VOC**	**SOx**	**PM10**	**PM2.5**	**NOx**	**CO**	**VOC**	**SOx**	**PM10**	**PM2.5**	**NOx**	**CO**	**VOC**	**SOx**	**PM10**	**PM2.5**	**CO2e**
aux blr 1 high	2.74	4.48	1.34	0.747	1.25	1.25	11.71	27.81	8.24	2.86	4.87	4.87	1.65	2.69	0.808	0.449	0.748	0.748	17550
aux blr 1 low	0.342	4.48	1.31	0.0933	0.156	0.156	0	0	0	0	0	0	0.0992	1.3	0.379	0.0271	0.0451	0.0451	1060
aux blr 1 SU	1.54	4.51	1.32	0.09	0.23	0.23	0	0	0	0	0	0	0.24	0.4	0.12	0.01	0.03	0.03	317
aux blr 2 high	2.74	4.48	1.34	0.747	1.25	1.25	11.71	27.81	8.24	2.86	4.87	4.87	1.65	2.69	0.808	0.449	0.748	0.748	17550
aux blr 2 low	0.342	4.48	1.31	0.0933	0.156	0.156	0	0	0	0	0	0	0.0992	1.3	0.379	0.0271	0.0451	0.0451	1060
aux blr 2 SU	1.54	4.51	1.32	0.09	0.23	0.23	0	0	0	0	0	0	0.24	0.4	0.12	0.01	0.03	0.03	317
ntp blr 1	0.11	0.366	0.054	0.00925	0.05	0.05	1.54	5.12	0.756	0.129	0.7	0.7	0.286	0.892	0.132	0.0225	0.122	0.122	2855
ntp blr 2	0.11	0.366	0.054	0.00925	0.05	0.05	1.54	5.12	0.756	0.129	0.7	0.7	0.286	0.892	0.132	0.0225	0.122	0.122	2855
L-EGS-1	4.72	0.24	0.08	0.04	0.24	0.24	4.72	0.24	0.08	0.04	0.24	0.24	0.47	0.024	0.008	0.0036	0.024	0.024	391.1
L-EGS-2	4.72	0.24	0.08	0.04	0.24	0.24	4.72	0.24	0.08	0.04	0.24	0.24	0.47	0.024	0.008	0.0036	0.024	0.024	391.1
S-EGS	2.6	0.32	0.09	0.001	0.07	0.07	2.6	0.32	0.09	0.001	0.07	0.07	0.259	0.031	0.009	0.0004	0.007	0.007	44.7
L-FP-1	3.53	0.68	0.14	0.007	0.12	0.12	3.53	0.68	0.14	0.007	0.12	0.12	0.352	0.068	0.014	0.0007	0.012	0.012	76
L-FP-2	3.53	0.68	0.14	0.007	0.12	0.12	3.53	0.68	0.14	0.007	0.12	0.12	0.352	0.068	0.014	0.0007	0.012	0.012	76
S-FP	3.53	0.68	0.14	0.007	0.12	0.12	3.53	0.68	0.14	0.007	0.12	0.12	0.352	0.068	0.014	0.0007	0.012	0.012	76
WSAC 1	0	0	0	0	0.015	0.015	0	0	0	0	0.18	0.18	0	0	0	0	0.015	0.015	0
WSAC 2	0	0	0	0	0.015	0.015	0	0	0	0	0.18	0.18	0	0	0	0	0.015	0.015	0
Diesel tanks	0	0	0.0023	0	0	0	0	0	0.0557	0	0	0	0	0	0.0102	0	0	0	0
SCAQMD Base Total	32.09	30.51	8.72	1.98	4.31	4.31	49.13	68.70	18.72	6.08	12.41	12.41	6.81	10.85	2.96	1.03	2.01	2.01	44619

	lbs/hr						lbs/day						TPY						
	NOx	**CO**	**VOC**	**SOx**	**PM10**	**PM2.5**	**NOx**	**CO**	**VOC**	**SOx**	**PM10**	**PM2.5**	**NOx**	**CO**	**VOC**	**SOx**	**PM10**	**PM2.5**	**CO2e**
aux blr 1 high	2.74	4.48	1.34	0.747	1.25	1.25	11.71	27.81	8.24	2.86	4.87	4.87	1.65	2.69	0.808	0.449	0.748	0.748	17550

aux blr 1 low	0.342	4.48	1.31	0.0933	0.156	0.156	0	0	0	0	0	0	0.0992	1.3	0.379	0.0271	0.0451	0.0451	1060
aux blr 1 SU	1.54	4.51	1.32	0.09	0.23	0.23	0	0	0	0	0	0	0.24	0.4	0.12	0.01	0.03	0.03	317
aux blr 2 high	2.74	4.48	1.34	0.747	1.25	1.25	11.71	27.81	8.24	2.86	4.87	4.87	1.65	2.69	0.808	0.449	0.748	0.748	17550
aux blr 2 low	0.342	4.48	1.31	0.0933	0.156	0.156	0	0	0	0	0	0	0.0992	1.3	0.379	0.0271	0.0451	0.0451	1060
aux blr 2 SU	1.54	4.51	1.32	0.09	0.23	0.23	0	0	0	0	0	0	0.24	0.4	0.12	0.01	0.03	0.03	317
ntp blr 1	0.11	0.366	0.054	0.00925	0.05	0.05	1.54	5.12	0.756	0.129	0.7	0.7	0.286	0.892	0.132	0.0225	0.122	0.122	2855
ntp blr 2	0.11	0.366	0.054	0.00925	0.05	0.05	1.54	5.12	0.756	0.129	0.7	0.7	0.286	0.892	0.132	0.0225	0.122	0.122	2855
WSAC 1	0	0	0	0	0.015	0.015	0	0	0	0	0.18	0.18	0	0	0	0	0.015	0.015	0
WSAC 2	0	0	0	0	0.015	0.015	0	0	0	0	0.18	0.18	0	0	0	0	0.015	0.015	0
SCAQMD Offset Total	9.46	27.67	8.05	1.88	3.40	3.40	26.50	65.86	17.99	5.98	11.50	11.50	4.55	10.56	2.88	1.02	1.92	1.92	43564
SCAQMD 30DA							27.38	68.06	18.59	6.18	11.88	11.88							
			lbs/hr						lbs/day							TPY			
	NOx	**CO**	**VOC**	**SOx**	**PM10**	**PM2.5**	**NOx**	**CO**	**VOC**	**SOx**	**PM10**	**PM2.5**	**NOx**	**CO**	**VOC**	**SOx**	**PM10**	**PM2.5**	**CO2e**
aux blr 1 high	2.74	4.48	1.34	0.747	1.25	1.25	11.71	27.81	8.24	2.86	4.87	4.87	1.65	2.69	0.808	0.449	0.748	0.748	17550
aux blr 1 low	0.342	4.48	1.31	0.0933	0.156	0.156	0	0	0	0	0	0	0.0992	1.3	0.379	0.0271	0.0451	0.0451	1060
aux blr 1 SU	1.54	4.51	1.32	0.09	0.23	0.23	0	0	0	0	0	0	0.24	0.4	0.12	0.01	0.03	0.03	317
aux blr 2 high	2.74	4.48	1.34	0.747	1.25	1.25	11.71	27.81	8.24	2.86	4.87	4.87	1.65	2.69	0.808	0.449	0.748	0.748	17550
aux blr 2 low	0.342	4.48	1.31	0.0933	0.156	0.156	0	0	0	0	0	0	0.0992	1.3	0.379	0.0271	0.0451	0.0451	1060
aux blr 2 SU	1.54	4.51	1.32	0.09	0.23	0.23	0	0	0	0	0	0	0.24	0.4	0.12	0.01	0.03	0.03	317
ntp blr 1	0.11	0.366	0.054	0.00925	0.05	0.05	1.54	5.12	0.756	0.129	0.7	0.7	0.286	0.892	0.132	0.0225	0.122	0.122	2855
ntp blr 2	0.11	0.366	0.054	0.00925	0.05	0.05	1.54	5.12	0.756	0.129	0.7	0.7	0.286	0.892	0.132	0.0225	0.122	0.122	2855
L-EGS-1	4.72	0.24	0.08	0.04	0.24	0.24	4.72	0.24	0.08	0.04	0.24	0.24	0.47	0.024	0.008	0.0036	0.024	0.024	391.1
L-EGS-2	4.72	0.24	0.08	0.04	0.24	0.24	4.72	0.24	0.08	0.04	0.24	0.24	0.47	0.024	0.008	0.0036	0.024	0.024	391.1
S-EGS	2.6	0.32	0.09	0.001	0.07	0.07	2.6	0.32	0.09	0.001	0.07	0.07	0.259	0.031	0.009	0.0004	0.007	0.007	44.7
L-FP-1	3.53	0.68	0.14	0.007	0.12	0.12	3.53	0.68	0.14	0.007	0.12	0.12	0.352	0.068	0.014	0.0007	0.012	0.012	76
L-FP-2	3.53	0.68	0.14	0.007	0.12	0.12	3.53	0.68	0.14	0.007	0.12	0.12	0.352	0.068	0.014	0.0007	0.012	0.012	76
S-FP	3.53	0.68	0.14	0.007	0.12	0.12	3.53	0.68	0.14	0.007	0.12	0.12	0.352	0.068	0.014	0.0007	0.012	0.012	76
WSAC 1	0	0	0	0	0.015	0.015	0	0	0	0	0.18	0.18	0	0	0	0	0.015	0.015	0
WSAC 2	0	0	0	0	0.015	0.015	0	0	0	0	0.18	0.18	0	0	0	0	0.015	0.015	0
Diesel tanks	0	0	0.0023	0	0	0	0	0	0.0557	0	0	0	0	0	0.0102	0	0	0	0
PSD Total	32.09	30.51	8.72	1.98	4.31	4.31	49.13	68.70	18.72	6.08	12.41	12.41	6.81	10.85	2.96	1.03	2.01	2.01	44619

Notes:

Hourly Values

1. this table does not account for the run "spacing" of the various IC engines, i.e., only one engine is run in any hour.
2. for each aux boiler, it should be noted that you cannot have a SU/low load hour and a full load hour at the same time.

Daily Values

3. this table assumes that all the IC engines are run for readiness/maintenance testing on the same day.
4. this table assumes each aux boiler has one cold start per day, with all other transient starts at warm conditions (i.e., a low load hour for emissions purposes).
5. for SCAQMD 30 DA, the maximum days per month is 31.

Annual Values

6. annual values incorporate all operating modes.

Table 4.1A-14 Palen Solar - Commissioning Activity Emisisons Estimates

Assumptions:

1. no commissioning activity for the various stationary diesel engines is required.
2. no commissioning activity for the various mobile site support vehicles is required.
3. no commissioning activity will be required for the WSACs
4. commissioning activities will be confined to the Aux and NTP boilers

Commissioning Schedule:

Aux Boilers (each):

4 hours (cold start mode)
4 hours (warm start mode)
12 hours (at low load-25%)
12 hours (at medium load-50%)
8 hours (at high load-100%)
Total hours: 40

1. for startups (cold or warm) use SU emissions factors
2. for low loads<=25% use the low load emissions factors.
3. for loads >25%, use the 25-100% load emissions factors.
4. assume 31.1 mmbtu/hr for SU
3. assume 63 mmbtu/hr for low load hours (<=25%)
4. assume 125 mmbtu/hr for medium load hours (50%)
5. Assume 249 mmbut/hr for high load hours (100%)

Emissions Factors:

Pollutant	SU	Low load	High Load	
Nox	0.088	0.011	0.011	lb/mmbtu
CO	0.146	0.144	0.018	lb/mmbtu
VOC	0.043	0.042	0.0054	lb/mmbtu
SOx	0.003	0.003	0.003	lb/mmbtu
PM10/2.5	0.01	0.005	0.005	lb/mmbtu

Calculated heat input during commissioning period:

SU:	249	mmbtu/period
Low load:	756	mmbtu/period
Medium load:	1500	mmbtu/period
High load:	1992	mmbtu/period
Total	4497	mmbtu/period

Commissioning Emissions for One Plant:

Emissions per Period, lbs

	Nox	CO	VOC	SOx	PM10/2.5
SU	21.89	36.32	10.70	0.75	2.49
Low Load	8.32	108.86	31.75	2.27	3.78
Med Load	16.50	27.00	8.10	4.50	7.50
High Load	21.91	35.86	10.76	5.98	9.96
Total	68.62	208.04	61.31	13.49	23.73

Commissioning Emissions for Two Plants:

Nox	CO	VOC	SOx	PM10/2.5
137.2448	416.0896	122.6144	26.9808	47.456

Total All Boiler Commissioning Emissions:

LBS per Period

Nox	CO	VOC	SOx	PM10/2.5	CO2e
140	424	130	28	49	540309
					270.2 tons

Commissioning Schedule:

NTP Boilers (each):

4 hours (cold start mode)
4 hours (at low load-25%)
6 hours (at medium load-50%)
6 hours (at high load-100%)
Total hours: 20

1. use high load emissions factors for all hours
2. assume 2.5 mmbtu/hr for low load and SU hours (25%)
3. assume 5 mmbtu/hr for medium load hours (50%)
4. assume 10 mmbtu/hr for high load hours (100%)

Emissions Factors:

Pollutant	High Load	
Nox	0.011	lb/mmbtu
CO	0.036	lb/mmbtu
VOC	0.033	lb/mmbtu
SOx	0.003	lb/mmbtu
PM10/2.5	0.005	lb/mmbtu

Calculated heat input during commissioning period:

Low load:	20	mmbtu/period
Medium load:	30	mmbtu/period
High load:	60	mmbtu/period
Total	110	mmbtu/period

Commissioning Emissions for One Plant:

Emissions per Period, lbs

Nox	CO	VOC	SOx	PM10/2.5
1.21	3.96	3.63	0.33	0.55

Commissioning Emissions for Two Plants:

Nox	CO	VOC	SOx	PM10/2.5
2.42	7.92	7.26	0.66	1.1

Cumulative CO2e EF: 117.285 lbs/mmbtu

Attachment 4.1A-1

System Operational Support Data

Palen - West / East Field

12/6/2012

Summary Emissions Calculations: Annual Emissions

Equipment	Total Number of Units	Size/Rating	Adjusted rating (average)		Operating Hours/yr	Average Operating Hours/d	Emissions, tons per year						
							NOx	SO2	CO	VOC	PM10	PM2.5	GHG
Auxiliary boiler													
1) for SRSG warm&cooling/ Turbine Boosting mode	2	249		MMBtu/hr	1202	3.5	1.7	0.5	2.8	0.8	0.8	0.8	18,017
2) during Aux boiler warm startup ~12.5% MCR load	2	249	31.13	MMBtu/hr	580	1.7	0.1	0.0	1.0	0.3	0.1	0.1	840
Nighttime boilers (1) (2)	2	10		MMBtu/hr	4872		0.3	0.1	0.9	0.8	0.1	0.1	2,833
Power Plant Emergency engines	2	2500		kW	200		4.3	0.0	0.3	0.1	0.0	0.0	375
Common area emergency engine	1	250		kW	200		0.3	4.0E-03	0.03	0.01	0.01	0.01	41
Fire pump engines	3	200		hp	200		0.11	2.0E-03	0.07	0.01	0.01	0.01	21
WSACs	2	4000		gpm	2000	12	-	-	-	-	0.03	0.03	-
Total							12.7	1.2	12.2	5.8	2.1	2.1	39002.9
Threshold													

Total annual natural gas use	732,141	MMBtu/yr	366,071	calculated per plant	364,216	by model for West Plant	370,981	by model for East Plant
Total annual Diesel use	11,043	MMBtu/yr			225,336	for start-up/cool-dowm/nightwatch	225,814	for start-up/cool-dowm/nightwatch
					138,880	For MWe	145,167	For MWe

1. NPB (night time boiler)- 13 hours (annual average) of normal operation at full load during night plus 1 hour startup
2. NPB startup emission level is not considered

An assumption is that lb/hr emission rate during startup is the same as full load for both aux boiler and NPB. Actual startup duration is 20-40 min (depends on boiler's drum temperature)

Total	365	days/yr
Days of operation (SRSG start-ups)	348	days/yr
Cloudy days/ plant maintenance	17	days/yr

Auxiliary Boiler MOO	Boiler Load, %	Adjusted for partial load MMBTU/hr	Days with Boosting Mode (Solar Boiler operation ~ 11 hr)		Days - without Boosting Mode (Solar Boiler operation ~ 7 hr)		300 days Days with Boosting Mode		48 days Days - without Boosting Mode	
			Schedule	Equivalent Duration, min	Schedule	Equivalent Duration, min	hr/year	MMBTU/yr	hr/year	MMBTU/yr
Aux Boiler startup from warm standby	12.5	31.1	5:20 - 6:00	40.0	7:20 - 8:00	40.0	200.0	6,225	32.0	996
Solar Boiler Piping heating (morning) with aux boiler steam	90	224.1	6:00 - 7:00	60.0	8:00 - 9:00	60.0	300.0	67,230	48.0	10,757
Aux Boiler bottled up/warm stand by	0		7:00-12:10		9:00-12:10					
Aux Boiler startup from warm standby	12.5	31.1	12:10-12:30	30.0	12:10-12:30	30.0	150.0	4,669	24.0	747
Aux Boiler bottled up/warm stand by	0		12:30-14:30		12:30-15:40					
Aux Boiler startup from warm standby	12.5	31.1	14:30 -15.00	30.0			150.0	4,669		
IP turbine boosting mode (aux boiler)	50	124.5	15:30 - 16.00	30.0			150.0	18,675		
total - hours/year	100	249.0	16:00 - 17:30	90.0			450.0	112,050		
750.0	80	199.2	17:30 - 18:00	30.0			150.0	29,880		
Aux Boiler startup from warm standby	12.5	31.1			15:40-16:00	30.0			24.0	747
Solar Boiler Piping cooling (evening) with aux boiler steam	70	174.3	18:00 - 19:00	60.00	16:00 - 17:00	60.0	300.0	52,290	48.0	8,366
								295,688		**21,613**

Type of startup	Turbine shutdown period	Startups/ year
Very Cold startup	~ 80 hours	3
Cold startup	~ 36 hours	10
Warm startup (daily start-up)	~ 12 hours	210
Warm startup (daily start-up, winter)	~ 16 hours	125
		348

Aux Boiler Operation at 12.5% load (high emission)	580	hr/yr	1.7 hours/day (eq)@31.1 MMBtu/hr
Aux Boiler Operation at 25-100%MCR	1446.0	hr/yr	3.5 hours/day (eq)@249MMBtu/hr
Aux Boiler Operation at 25-100%MCR (average, equiv to full load of operation)	**1202.0**	**hr/yr**	
Total annual natural gas use (not incl NPB and 12.5 % Aux boiler operation)	299,248	MMBTU/yr	
Adjusted Aux Boiler rating (SRSG warm&cooling/ Boosting mode)	207	MMBtu/hr (equiv) if use 1446 hr operation at diff loads	

Palen - 250 MW - East Field

UPDATE -06-Dec-2012

Operation Hours

Auxiliary Boiler	Auxiliary Boiler MOO	Boiler Load, %	Adjusted for partial load MMBTU/hr	Days with Boosting Mode Solar Boiler operation ~ 11 h Schedule	Equivalent Duration, min	Days - without Boosting Mod Solar Boiler operation ~ 7 h Schedule	Equivalent Duration, min
SU	Aux Boiler startup from warm standby	12.5	31.1	5:20 - 6:00	40.0	7:20 - 8:00	40.0
	Solar Boiler Piping heating (morning) with aux boiler st	90	224.1	6:00 - 7:00	60.0	8:00 - 9:00	60.0
	Aux Boiler bottled up/warm stand by	0		7:00-12:10		9:00-12:10	
	Aux Boiler startup from warm standby	12.5	31.1	12:10-12:30	20.0	12:10-12:30	20.0
	Aux Boiler bottled up/warm stand by	0		12:30-14:30		12:30-15:40	
	Aux Boiler startup from warm standby	12.5	31.1	14:30 -15.00	20.0		
	IP turbine boosting mode (aux boiler)	50	124.5	15:30 - 16.00	30.0		
	total - hours/year	100	249.0	16:00 - 17:30	90.0		
	717.5	80	199.2	17:30 - 18:00	30.0		
	Aux Boiler startup from warm standby	12.5	31.1			15:40-16:00	20.0
	Solar Boiler Piping cooling (evening) with aux boiler ste	70	174.3	18:00 - 19:00	60.00	16:00 - 17:00	60.0
NPB	Night Preservation	100	10	19:00 - 06:00	660.00	17:00 - 08:00	900.0

Days of operation (SRSG start-ups)	348	days/yr
Days with Boosting Mode	300	days/yr
Days - without Boosting Mode	48	days/yr

Annual gas consumption

Auxiliary Boiler	Description	Total (HHV) MWth	Total Gas Use (HHV) MMBtu	Operation Hours hrs
SU	Start-Up	22,344	94,122	812
SU	Cool-Down	21,162	89,142	348
SU	IP turbine boosting mode	34,462	145,167	750
NPB	Nightwatch	10,101	42,550	4,020
			370,981	

Annual gas consumption

Palen East Field	ELECTRICAL OUTPUT, MWhe TOTAL	Gas Use, HHV Nightwatch (MMBtu)	Start-Up (MMBtu)	CoolDown (MMBtu)	Electrical Generation (MMBtu)	
January	46,836	4,450	7,968	7,719	4,542	
February	42,665	3,220	7,221	6,225	6,154	
March	63,277	3,520	7,719	7,470	8,400	
April	63,326	3,380	8,217	7,470	9,072	
May	73,171	3,140	8,715	7,719	8,321	
June	76,452	2,880	7,470	7,470	24,528	
July	68,824	3,250	7,968	7,719	21,822	
August	67,266	3,440	7,968	7,719	21,769	
September	63,439	3,530	7,470	7,470	17,638	
October	56,286	3,810	8,715	7,719	9,023	
November	50,844	4,060	7,470	7,470	7,229	
December	34,712	3,870	7,221	6,972	6,669	
	707,098	42,550	94,122	89,142	145,167	370,981

Annual Average Electricity Production

Plant	Capacity (Nominal MW, net)	No. of Heliostats (maximum)	Annual Production (MWh, Net) Solar Boiler (SRSG)	Nat. Gas Boiler (*)	Total	Annual Production (MWh, Gross)
Solar Plant 2 – East Field	250 MW	85,000	701,800	5,300	707,100	784,000
				0.75%		

(*) Contribution to Electricity Production

PB efficiency	27%		
Total electrical output	707,098	MWhe	

Gas Use [% of electrical contribution, design Point storage eff.]		Total MWth	Total MWhe
Gas for Start-Up	0.9%	22,344	6,033
Gas for CoolDown	0.8%	21,162	5,714
Gas for MWe	1.3%	34,462	9,305
Gas for Night Preservation	0.4%	10,101	2,727

Ambient Temperature	Number of Hours of Operation by Actual Load (Solar & Storage) MWt & Temperature 0-112	112-225	225-281	281-422	422-450	450-506	506-562	562-633	TOTAL
-1 - 12°C	0	5	27	17	20	7	5	64	145
12 - 20oC	0	8	36	39	45	43	44	395	610
20 - 28oC	0	5	35	52	60	43	91	615	901
28 - 36oC	0	1	14	33	54	47	91	643	883
36 - 40oC	0	0	1	10	16	23	21	270	341
40 - 42oC	0	0	2	6	12	10	20	181	231
42 - 44oC	0	0	0	4	7	17	9	167	204
44 - 48°C	0	0	0	0	5	4	7	149	165
TOTAL HRS	0	19	115	161	219	194	288	2,484	3,480

Palen - 250 MW - West Field

UPDATE -06-Dec-2012

Operation Hours

Auxiliary Boiler	Auxiliary Boiler MOO	Boiler Load, %	Adjusted for partial load MMBTU/hr	Days with Boosting Mode (Solar Boiler operation ~ 11 hr) Schedule	Equivalent Duration, min	Days - without Boosting Mode (Solar Boiler operation ~ 7 hr) Schedule	Equivalent Duration, min
	Aux Boiler startup from warm standby	12.5	31.1	5:20 - 6:00	40.0	7:20 - 8:00	40.0
	Solar Boiler Piping heating (morning) with aux boiler stear	90	224.1	6:00 - 7:00	60.0	8:00 - 9:00	60.0
	Aux Boiler bottled up/warm stand by	0		7:00-12:10		9:00-12:10	
	Aux Boiler startup from warm standby	12.5	31.1	12:10-12:30	20.0	12:10-12:30	20.0
	Aux Boiler bottled up/warm stand by	0		12:30-14:30		12:30-15:40	
SU	Aux Boiler startup from warm standby	12.5	31.1	14:30 -15.00	20.0		
	IP turbine boosting mode (aux boiler)	50	124.5	15:30 - 16.00	30.0		
	total - hours/year	100	249.0	16:00 - 17:30	90.0		
	717.5	80	199.2	17:30 - 18:00	30.0		
	Aux Boiler startup from warm standby	12.5	31.1			15:40-16:00	20.0
	Solar Boiler Piping cooling (evening) with aux boiler steam	70	174.3	18:00 - 19:00	60.00	16:00 - 17:00	60.0
NPB	Night Preservation	100	10	19:00 - 06:00	660.00	17:00 - 08:00	900.0

Days of operation (SRSG start-ups)	348	days/yr
Days with Boosting Mode	300	days/yr
Days - without Boosting Mode	48	days/yr

Annual gas consumption

Auxiliary Boiler	Description	Total (HHV) MWth	Total Gas Use (HHV) MMBtu	Operation Hours hrs
SU	Start-Up	22,226	93,624	812
SU	Cool-Down	21,162	89,142	348
SU	IP turbine boosting mode	32,970	138,880	750
NPB	Nightwatch	10,106	42,570	4,020
			364,216	

Annual gas consumption

Palen West Field	ELECTRICAL OUTPUT, MWhe TOTAL	Gas Use, HHV Nightwatch (MMBtu)	Start-Up (MMBtu)	CoolDown (MMBtu)	Electrical Generation (MMBtu)	
January	46,300	4,450	7,968	7,719	4,483	
February	42,514	3,220	7,221	6,225	5,989	
March	63,115	3,520	7,719	7,470	7,788	
April	63,174	3,400	7,719	7,470	8,416	
May	73,139	3,140	8,715	7,719	7,528	
June	76,419	2,880	7,470	7,470	22,623	
July	68,871	3,250	7,968	7,719	21,393	
August	67,282	3,440	7,968	7,719	20,751	
September	63,427	3,530	7,470	7,470	18,035	
October	55,993	3,810	8,715	7,719	8,365	
November	50,531	4,060	7,470	7,470	7,135	
December	34,419	3,870	7,221	6,972	6,374	
	705,184	42,570	93,624	89,142	138,880	364,216

Annual Average Electricity Production

Plant	Capacity (Nominal MW, net)	No. of Heliostats (maximum)	Annual Production (MWh, Net) Solar Boiler (SRSG)	Nat. Gas Boiler (*)	Total
Solar Plant 1 – West Field	250 MW	85,000	700,100	5,100	705,200
				0.72%	

(*) Contribution to Electricity Production

Annual Production (MWh, Gross)
781,400

PB efficiency	26%		
Total electrical output	705,184	MWhe	

Gas Use [% of electrical contribution, design Point storage eff.]		Total MWth	Total MWhe
Gas for Start-Up	0.8%	22,226	5,801
Gas for CoolDown	0.8%	21,162	5,523
Gas for MWe	1.2%	32,970	8,605
Gas for Night Preservation	0.4%	10,106	2,638

Ambient Temperature	Number of Hours of Operation by Actual Load (Solar & Gas) MWt & Temperature 0-17	17-105	105-193	193-281	281-370	370-458	458-546	546-634	TOTAL
-1 - 12°C	0	6	29	21	12	6	13	53	140
12 - 20oC	0	5	35	41	46	36	53	386	602
20 - 28oC	0	2	38	52	54	44	102	603	895
28 - 36oC	0	1	15	31	53	46	86	649	881
36 - 40oC	0	0	1	10	15	21	26	268	341
40 - 42oC	0	0	2	3	13	12	17	184	231
42 - 44oC	0	0	0	4	2	21	9	168	204
44 - 48°C	0	0	0	0	3	6	3	153	165
TOTAL HRS	0	14	120	162	198	192	309	2,464	3,459

Aux Boilers Summery

12/6/2012

Aux Boiler (25%-100% Load)

Emissions Calculations: 249 MMBtu/hr boilers
Boilers: 1 units total/plant

Pollutant	Emission Rate	
	ppmvd @ 3% O_2	lb/MMBtu
NO_x	9	0.011
SO_2 *	1.7	0.003
CO	25	0.018
VOC	12.6	0.0054
PM10**	--	0.005
PM2.5**	--	0.005
	kg/MMBtu	GWP
CO2 (3)	52.870	1
CH4 (4)	9.00E-04	21
N2O (4)	1.00E-04	310
CO2e		

0.005 lb PM/MMBtu (per NG-fired gas turbine test results)
* Based on maximum natural gas sulfur content of 0.75 grains/100 scf.
** Based on natural gas-fired gas turbine test results

Aux Boiler (12.5% Load)

Emissions Calculations: 31.1 MMBtu/hr boilers
Boilers: 1 units total/plant

Pollutant	Emission Rate	
	ppmvd @ 3% O_2	lb/MMBtu
NO_x	9	0.011
SO_2 *	1.7	0.003
CO	25	0.144
VOC	12.6	0.042
PM10**	--	0.005
PM2.5**	--	0.005
	kg/MMBtu	GWP
CO2 (3)	52.870	1
CH4 (4)	9.00E-04	21
N2O (4)	1.00E-04	310
CO2e		

0.005 lb PM/MMBtu (per NG-fired gas turbine test results)
* Based on maximum natural gas sulfur content of 0.75 grains/100 scf.
** Based on natural gas-fired gas turbine test results

Nighttime Boilers

Emissions Calculations: 10 MMBtu/hr boilers
Boilers: 1 units total/plant

Pollutant	Emission Rate	
	ppmvd @ 3% O_2	lb/MMBtu
NO_x	9	0.011
SO_2 *	1.7	0.003
CO	50	0.036
VOC	10	0.033
PM10**	--	0.0000
PM2.5**	--	0.0000
	kg/MMBtu	GWP
CO2 (3)	52.870	1
CH4 (4)	9.00E-04	21
N2O (4)	1.00E-04	310
CO2e		

0.005 lb PM/MMBtu (per NG-fired gas turbine test results)
* Based on maximum natural gas sulfur content of 0.75 grains/100 scf.
** Based on natural gas-fired gas turbine test results

Emissions from Mirrors Cleaning Activities

12/6/2012

FFT MWM Operation: assume 2013 MY onroad-certified engine

Cleaning operations occur: 365 days/y
20 hr/day average

310 HP (each)
17.6 gal fuel/hr per FFT MWM
352 gal fuel/day per FFT MWM
2,700 VMT/y per FFT MWM

Number of Vehicles per Plant:
West / East Field 12

Pollutant	Emission Factor	Units
NO_x	2.332	g/mi
SO_2	0.21	lb/1000 gal
CO	2.027	g/mi
VOC	0.951	g/mi
PM10/PM2.5 (combustion)	0.038	g/mi
PM10 (road dust)	0.3	lb/VMT
PM2.5 (road dust)	0.03	lb/VMT

NT MWM Operation: assume Tier 4 certified nonroad engine

Cleaning operations occur: 365 days/y
20 hr/day average

145 HP (each)
8.8 gal fuel/hr per NT MWM
176 gal fuel/day per NT MWM
4,000 VMT/y per NT MWM

Number of Vehicles per Plant:
West / East Field 1

Pollutant	Emission Factor	Units
NO_x	0.276	g/bhp-hr
SO_2	0.21	lb/1000 gal
CO	0.087	g/bhp-hr
VOC	0.1314	g/bhp-hr
PM10/PM2.5 (combustion)	0.0092	g/bhp-hr
PM10 (road dust)	0.17	lb/VMT
PM2.5 (road dust)	0.02	lb/VMT

WSACs 12/6/2012

Typical Worst-Case Design Parameters	
Water Flow Rate, 10E6 lbm/hr	2.00
Water Flow Rate, gal/min	**4000**
Drift Rate, %	0.0005
Drift, lbm water/hr	10.00
PM10 Emissions based on TDS Level	
TDS level, ppm	1500
PM10, lb/hr	0.015
PM10, lb/day	0.180
PM10, tpy	0.015

Based on 2000 hrs/yr
12 hrs/day

Attachment 4.1A-2

Auxiliary Boiler Specifications

BrightSource

Table of Contents

1. INTRODUCTION 3

2. STARTUP AUXILIARY BOILER 4

3. AUXILIARY NIGHT PRESERVATION BOILER 5

~~4. AUXILIARY ISH ..... 6~~ N/A

5. OPERATION & EMISSIONS 7

List of Figures

Figure 1: Natural Gas Consumption During June-September (Representative Day) – w/o TES ... 9

Figure 2: Natural Gas Consumption During October-May (Representative Day) – w/o TES 9

Figure 3: Natural Gas Consumption During June-September (Representative Day) – w/ TES ... 10

Figure 4: Natural Gas Consumption During October-May (Representative Day) – w/ TES 11

List of Tables

Table 1: Auxiliary Start-up Boiler Steam Parameters 4

Table 2: NPB & Electrical Superheater Steam Parameters* 5

~~Table 3: Auxiliary ISH – Steam Parameters ..... 6~~

Table 4: Number of Operation Hours of Start-up/ NPB Auxiliary Boilers – w/o TES 7

Table 5: Number of Operation Hours of Start-up/ NPB / ISH Auxiliary Boilers – w/ TES 7

Table 6: Start-up Boiler's Maximum Emissions 8

Table 7: Expected Natural Gas Consumption Pattern – 250MW Plant w/o TES 8

Table 8: Expected Natural Gas Consumption Pattern – 250MW Plant w/ TES 10

1. INTRODUCTION

This document describes the auxiliary boilers used in the 250MW Subcritical Solar Thermal Power Plant System:

- Start-up boiler
- Night preservation boiler
- ~~Auxiliary ISH (Independent Super Heater)~~

Auxiliary Boiler Description	250 MW Plant w/o TES	250 MW Plant w/ TES
Start-up boiler	Included	Included
NPB	Included	Included
~~ISH~~		~~Included~~ N/A

Definitions & Abbreviations

Definitions	
ACC	Air Cooled Condenser
BFP	Boiler Feed Pump
BFPT	Boiler Feed Pump Turbine
ISH	Independent Superheater
MBFP	Main Boiler Feed Pump
MCR	Maximum Continuous Rating
NPB	Night Preservation Boiler
SH	Superheater
SRSG	Solar Receiver Steam Generator
STG	Steam Turbine-Generator

2. STARTUP AUXILIARY BOILER

This auxiliary boiler will be used during the morning start-up cycle before the sun rises to preheat the superheater (SH) panels and the piping of the Solar Receiver Steam Generator (SRSG) so that solar flux will maximize output in minimal time. It is also used for: SRSG hot restart; to provide augmentation steam during the few expected cloudy days; or to boost the turbine to increase the power output.

This auxiliary boiler will provide auxiliary steam to the gland systems during the plant start-up, and to the Main Boiler Feed Pump (MBFP) turbine when the turbine extraction steam is not available.

Table 1: Auxiliary Start-up Boiler Steam Parameters

Steam	Capacity (249 MMBtu/hr)		Operating Temperature		Operating Pressure	
	kg/sec	lbs/hr	°C	°F	bara	psia
Superheated	~ 23.3 (1)	~ 185,000	410	770	~45	~650

Note: The boiler steam flow (~ 21 to 24 kg/s) will vary depending on the temperature in the deaerator (~ 150 to 187°C).

The startup auxiliary boiler and its blowdown system will be designed to produce steam quality that meets the turbine steam quality requirements.

The auxiliary boiler feed pump (BFP) will supply spray water to the SRSG auxiliary steam attemperation stations during the SRSG cold/warm startup and hot restart.

The auxiliary BFPs shall have enough capacity to feed both the auxiliary boiler and auxiliary steam attemperators at 100% maximum continuous rating (MCR) if spray water is required for processes external to the auxiliary boiler.

Adequate thermal insulation and a flue gas isolation damper shall be provided to reduce heat loss when the boiler is in standby mode.

The boiler subsystems will include start-up bypasses to the air cooled condenser (ACC), de-superheater stations, and associated piping, valves, and instruments.

3. AUXILIARY NIGHT PRESERVATION BOILER

The Night Preservation Boiler (NPB) will be a standard commercial packaged boiler that produces superheated steam, with a separate, standalone electric heater for further steam superheating. The NPB will provide superheated steam to the steam turbine-generator (STG) and boiler feed pump turbine (BFPT) gland systems overnight and during other shutdown periods when steam is not available from the SRSG and startup auxiliary boiler. The NPB will also provide pegging steam (saturated) to the deaerator during these shutdowns.

The electrical gland steam superheater installed downstream of the NPB will allow adjustment of the gland steam temperature in accordance with the STG metal temperature.

The boiler and electrical superheater steam parameters are specified in Table 2.

Table 2: NPB & Electrical Superheater Steam Parameters*

Steam	Capacity (10 MMBtu/hr)		Operating Temperature		Operating Pressure	
	kg/sec	lbs/hr	°C	°F	bara	psia
NPB Outlet	~ 1.3	~ 10,000	260	500	~12	~175
Electrical SH Outlet	~ 0.63	~ 5,000	400	752	~12	~175

Note: (*) The actual figures (flow, temperature and pressure) shall be determined on the basis of the STG and BFPT Manufacturers' data

The NPB boiler and its blowdown system will be designed to produce steam quality that meets the turbine steam quality requirements.

The NPB shall have its own deaerator. A dedicated chemical injection skid shall be provided for dosing amine and oxygen scavenger to feedwater of the NPB.

5. OPERATION & EMISSIONS

The boilers will be provided with ultra-low-NOx burners and flue gas recirculation to minimize NOx emissions.

Table 4: Number of Operation Hours of Start-up/ NPB Auxiliary Boilers – w/o TES

Boiler Operation	For Plant Startup /Shutdown Cooling	For Power Generation (Boosting mode)	Nighttime	Notes
Start-up Boiler	~ 800 hr/year	~ 900 hr/year		Equivalent to full load
	~ 2 hr/day	~ 3 hr/day		
NPB			~ 12 hr/day in summer ~ 16 hr/day in winter	Equivalent to full load
			~ 5,000 hr/year	

Table 5: Number of Operation Hours of Start-up/ NPB / ISH Auxiliary Boilers – w/ TES

Boiler Operation	For Plant Startup /Shutdown Cooling	For TES Discharge mode	Nighttime	Notes
Start-up Boiler	~ 800 hr/year			Equivalent to full load
	~ 2 hr/day			
NPB			~ 12 hr/day in summer ~ 16 hr/day in winter	Equivalent to full load
			~ 5,000 hr/year	
~~ISH~~		~~~ 2 hr/day~~		~~Equivalent to full load~~
		~~ 800 hr/year~~		

The emission limits for the auxiliary boilers throughout the turndown range (normal operation) are expected to be as shown in Table 6.

Table 6: Start-up Boiler's Maximum Emissions

Pollutant	Auxiliary Boiler	
	ppmvd @ 3% O2	lb/MMBtu
NOx	9.0	0.011
SO2*	1.7	0.0021
CO	25	0.018
VOC	12.6	0.0054
PM10	N/A	0.005

* Based on maximum natural gas sulfur content of 0.75 grains/100 scf.

The NPB shall be designed for 9 ppmvd NOx and 50 ppmvd CO.

The ISH aux. boiler's emissions – TBD

Table 7 and Figures 1 and 2 represent an approximation of the expected natural gas consumption pattern for 250MW Plant w/o TES.

Table 7: Expected Natural Gas Consumption Pattern – 250MW Plant w/o TES

Hour	01-04	05	06	07	08	09-10	11	12	13	14	15	16	17	18	19-24
June-September, MMBtu/hr	10	35	150	0	0	0	25	0	0	25	65	249	65	150	10
October-May, MMBtu/hr	10	10	10	35	150	0	0	25	0	0	25	150	10	10	10

Attachment 4.1A-3

IC Engine Specifications

TABLE OF CONTENTS

SECTION **PAGE**

Tables:

1 Equipment List and Ratings

2 Emergency Diesel Generators

3 Diesel Fire Pumps

Attachments:

1 0-ELV-GEN-001, Emergency Diesel Generator, Common Area, Datasheet

2 1-EMV-GEN-001 & 2-EMV-GEN-001, Emergency Diesel Generators, Power Blocks 1 & 2, Datasheet

3 0-FP-CP-001, Diesel Fire Pump, Common Area, Datasheet

4 1-FP-CP-001 & 2-FP-CP-001, Diesel Fire Pump, Power Blocks 1 & 2, Datasheet

5 Drawing C-1000, Revision D, Civil Overall Site Plan

6 Drawing P-1000A, Revision 3, Equipment Arrangement Plan, 250 MW Power Block #2 with Thermal Storage

7 Drawing P-1000B, Revision 3, Equipment arrangement Plan 250 MW Power Block #1 No Thermal Storage

8 Drawing P-1001, Revision 2, Equipment Arrangement Plan, Common Area

Copyright © 2012 CH2M HILL

TABLE 1
Equipment List and Ratings

Equipment Number	Description	Equipment Rating
0-ELV-GEN-001	Emergency Diesel Generator, Common Area	250 eKW, 480 VAC
1- EMV-GEN-001	Emergency Diesel Generator, Power Block #1	2,500 eKW, 4,160 VAC
2- EMV-GEN-001	Emergency Diesel Generator, Power Block #2	2,500 eKW, 4,160 VAC
0-FP-CP-001	Diesel Fire Water Pump, Common Area	4,000 GPM @ 323 TDH, 581 BHP
1-FP-CP-001	Diesel Fire Water Pump, Power Block #1	5,000 GPM @ 323 TDH, 609 BHP
2-FP-CP-001	Diesel Fire Water Pump, Power Block #2	5,000 GPM @ 323 TDH, 609 BHP

Copyright © 2012 CH2M HILL

Table 2

Emissions Data

Emergency Diesel Generators

Document: 459892-PSEGS-DOC-001
Client: BrightSource Industries Israel
Project: Palen Solar Electric Generating Facility

By: CH2M HILL
Date: 19 DEC 2012
Revision: 1

ATTRIBUTE	1	2	3	REMARKS
Description:	Common Area Emergency Diesel Generator	Power Block #1 Emergency Diesel Generator	Power Block #2 Emergency Diesel Generator	
Equipment Number:	0-ELV-GEN-001	1-EMV-GEN-001	2-EMV-GEN-001	
Quantity:	1	1	1	
Manufacturer:	Caterpillar	Caterpillar	Caterpillar	
Model:	CAT C9 ATAAC	CAT 3516C-HD ATAAC	CAT 3516C-HD ATAAC	
Model Year:	2014	2014	2014	Assumed Year of Purchase
Rated Horsepower:				
Generator Power Output:	250 ekW	2,500 ekW	2,500 ekW	
EPA Tier:	3	4	4	
Manufacturer Emission Data Sheet:	See Attachment 1	See Attachment 2	See Attachment 2	
Technical Data Sheet showing engine exhaust temperature, flow, fuel usage:	See Attachment 1	See Attachment 2	See Attachment 2	
Engine Stack Height	16.00	20.00	20.00	Elevation above grade (feet)
Stack Outlet Elevation	660.50	565.50	555.50	Elevation (feet)
Engine Stack Diameter	7.00	20.00	20.00	(Inches)
Exhaust Direction	Vertical	Vertical	Vertical	
Exhaust Cap or Flapper:	Neither	Neither	Neither	Vertical Stack with Drain
Stack Location:	N 71,958.06 E 32,996.29 N 3,728,396.186 E 664,165.167	N 77,275.88 E 34,419.55 N 3,730,020.069 E 664,587.004	N 72,563.45 E 41,308.27 N 3,728,599.323 E 666,697.033	Project Grid (feet) Project Grid (feet) UTM Coordinates NAD 83 (meters) UTM Coordinates NAD 83 (meters)
Manufacturer of Verified Diesel Emission Control System (VDECS):	N/A	N/A	N/A	
Model of VDECS:	N/A	N/A	N/A	

Copyright © 2012 CH2M HILL

Table 2

Emissions Data

Emergency Diesel Generators

Document: 459892-PSEGS-DOC-001
Client: BrightSource Industries Israel
Project: Palen Solar Electric Generating Facility

By: CH2M HILL
Date: 19 DEC 2012
Revision: 1

ATTRIBUTE	1	2	3	REMARKS
Description:	Common Area Emergency Diesel Generator	Power Block #1 Emergency Diesel Generator	Power Block #2 Emergency Diesel Generator	
Equipment Number:	0-ELV-GEN-001	1-EMV-GEN-001	2-EMV-GEN-001	
Maximum Usage: hours/day, hours/quarter, hours/year:	52 hrs/yr	52 hrs/yr	52 hrs/yr	Weekly test of 1 hour or less
Description of other equipment powered (lights, construction office, etc.)	Control System, Control Room Lights and HVAC Equipment	Emergency Electrical Bus, Lubricating Oil Systems, Turbine Turning Gear	Emergency Electrical Bus, Lubricating Oil Systems, Turbine Turning Gear	
Maximum length of time that the unit will remain in the same footprint:	Life of the Plant	Life of the Plant	Life of the Plant	
If the unit will be moved, reason for move (i.e., shorten haul distances).	No unit movement anticipated	No unit movement anticipated	No unit movement anticipated	
Site plan of where engine will be located, showing property lines, existing buildings, and surrounding land uses.	See Drawing P-1001 (Item 112) and C-1000	See Drawing P-1000B (Item 12) and C-1000	See Drawing P-1000A (Item 12) and C-1000	

Copyright © 2012 CH2M HILL

Table 3

Emissions Data

Diesel Fire Water Pumps

Document: 459892-PSEGS-DOC-001
Client: BrightSource Industries Israel
Project: Palen Solar Electric Generating Facility

By: CH2M HILL
Date: 19 DEC 2012
Revision: 1

ATTRIBUTE	1	2	3	REMARKS
Description:	Common Area Diesel Fire Water Pump	Power Block #1 Diesel Fire Water Pump	Power Block #2 Diesel Fire Water Pump	
Equipment Number:	0-FP-CP-001	1-FP-CP-001	2-FP-CP-001	
Quantity:	1	1	1	
Pump Manufacturer:	Aurora Pump	Aurora Pump	Aurora Pump	
Diesel Manufacturer:	Clark / John Deere	Clark / John Deere	Clark / John Deere	
Diesel Model:	JX6H-UFAD88	JX6H-UFAD88	JX6H-UFAD88	
Model Year:	2014	2014	2014	Assumed Year of Purchase
Rated Horsepower:	617	617	617	
Generator Power Output:	N/A	N/A	N/A	
EPA Tier:	3	3	3	
Manufacturer Emission Data Sheet:	See Attachment 3	See Attachment 4	See Attachment 4	
Technical Data Sheet showing engine exhaust temperature, flow, fuel usage:	See Attachment 3	See Attachment 4	See Attachment 4	
Engine Stack Height	20.00	20.00	20.00	Elevation above grade (feet)
Stack Outlet Elevation	664.50	571.50	561.50	Elevation (feet)
Engine Stack Diameter	8.00	8.00	8.00	(Inches)
Exhaust Direction	Vertical	Vertical	Vertical	
Exhaust Cap or Flapper:	Neither	Neither	Neither	Vertical Stack with Drain
Stack Location:	N 71,956.84 E 33,063.80 N 3,728,395.966 E 664,185.744	N 77,089.48 E 33,751.65 N 3,729,961.763 E 664,383.869	N 72,377.08 E 40,640.37 N 3,728,541.027 E 666,493.896	Project Coordinate (feet) Project Coordinate (feet) UTM Coordinates NAD 83 (meters) UTM Coordinates NAD 83 (meters)
Manufacturer of Verified Diesel Emission Control System (VDECS):	N/A	N/A	N/A	

Copyright © 2012 CH2M HILL

Table 3

Emissions Data

Diesel Fire Water Pumps

Document: 459892-PSEGS-DOC-001
Client: BrightSource Industries Israel
Project: Palen Solar Electric Generating Facility

By: CH2M HILL
Date: 19 DEC 2012
Revision: 1

ATTRIBUTE	1	2	3	REMARKS
Description:	Common Area Diesel Fire Water Pump	Power Block #1 Diesel Fire Water Pump	Power Block #2 Diesel Fire Water Pump	
Equipment Number:	0-FP-CP-001	1-FP-CP-001	2-FP-CP-001	
Model of VDECS:	N/A	N/A	N/A	
Maximum Usage: hours/day, hours/quarter, hours/year:	199 hrs/yr	199 hrs/yr	199 hrs/yr	Weekly test of 1 hour or less
Description of other equipment powered (lights, construction office, etc.)	Fire Pump Only	Fire Pump Only	Fire Pump Only	
Maximum length of time that the unit will remain in the same footprint:	Life of the Plant	Life of the Plant	Life of the Plant	
If the unit will be moved, reason for move (i.e., shorten haul distances).	No unit movement anticipated	No unit movement anticipated	No unit movement anticipated	
Site plan of where engine will be located, showing property lines, existing buildings, and surrounding land uses.	See Drawing P-1001 (Item 114) and C-1000	See Drawing P-1000B (Item 28)	See Drawing P-1000A (Item 28)	

Copyright © 2012 CH2M HILL

DIESEL GENERATOR SET

0-ELV-GEN-001
Emergency Diesel Generator - Common Area

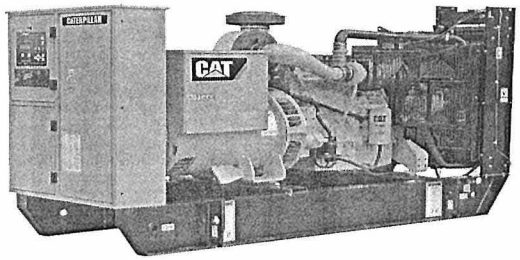

Image shown may not reflect actual package.

STANDBY
250 ekW 313 kVA
60 Hz 1800 rpm 480 Volts

Caterpillar is leading the power generation marketplace with Power Solutions engineered to deliver unmatched flexibility, expandability, reliability, and cost-effectiveness.

FEATURES

FUEL/EMISSIONS STRATEGY
- EPA Certified for Stationary Emergency Application (EPA Tier 3 emissions levels)

DESIGN CRITERIA
- The generator set accepts 100% rated load in one step per NFPA 110 and meets ISO 8528-5 transient response.

UL 2200
- UL 2200 listed packages available. Certain restrictions may apply. Consult with your Cat® Dealer.

FULL RANGE OF ATTACHMENTS
- Wide range of bolt-on system expansion attachments, factory designed and tested
- Flexible packaging options for easy and cost effective installation

SINGLE-SOURCE SUPPLIER
- Fully prototype tested with certified torsional vibration analysis available

WORLDWIDE PRODUCT SUPPORT
- Cat dealers provide extensive post sale support including maintenance and repair agreements
- Cat dealers have over 1,800 dealer branch stores operating in 200 countries
- The Cat® S•O•S℠ program cost effectively detects internal engine component condition, even the presence of unwanted fluids and combustion by-products

CAT® C9 ATAAC DIESEL ENGINE
- Utilizes ACERT™ Technology
- Reliable, rugged, durable design
- Field-proven in thousands of applications worldwide
- Four-stroke diesel engine combines consistent performance and excellent fuel economy with minimum weight
- ADEM™A4 electronic engine control

CAT GENERATOR
- Matched to the performance and output characteristics of Cat engines
- Load adjustment module provides engine relief upon load impact and improves load acceptance and recovery time
- UL 1446 Recognized Class H insulation

CAT EMCP 4 CONTROL PANELS
- Simple user friendly interface and navigation
- Scalable system to meet a wide range of customer needs
- Integrated Control System and Communications Gateway

FACTORY INSTALLED STANDARD & OPTIONAL EQUIPMENT

System	Standard	Optional
Air Inlet	• Light Duty Air filter • Service indicator	[ ] Single element air filter [ ] Dual element air filter [ ] Heavy-duty dual element air filter with precleaner [ ] Air inlet shut-off
Cooling	• Radiator package mounted • Coolant level sight gauge • Coolant drain line with valve • Fan and belt guards • Cat® Extended Life Coolant	[ ] Radiator duct flange [ ] Low coolant level sensor
Exhaust	• Dry exhaust manifold • Exhaust flange outlet	[ ] Industrial [ ] Residential [ ] Critical Mufflers [ ] Stainless steel exhaust flex fittings with split-cuff [ ] Manifold and turbocharger guards [ ] Elbows and through-wall kits
Fuel	• Primary fuel filter with integral water separator • Secondary fuel filters • Fuel priming pump • Engine fuel transfer pump • Fuel cooler	[ ] Integral dual wall UL listed fuel tank bases [ ] Sub-base dual wall UL listed fuel tank base [ ] Manual transfer pump [ ] Fuel level switch [ ] Flexible fuel lines
Generator	• Class H insulation • Class H temperature Rise • VR6 voltage regulator with 3-phase sensing with load adjustment module • IP23 Protection • Power cable termination box (NEMA mech lug holes)	[ ] Oversize generators [ ] Digital voltage regulator with kVAR/PF control [ ] Anti-condensation heaters [ ] Coastal Insulation Protection (CIP) [ ] Permanent magnet excitation (PMG) [ ] Internal excited (IE) [ ] Reactive droop
Power Termination	• Power center houses EMCP controller and control terminations (rear mounted) • Segregated low voltage wiring termination panel • Bottom cable entry • IP22 Protection	[ ] Power center mounting option (right side) [ ] Circuit breakers, UL listed, 3 pole (80% & 100% rated) [ ] Circuit breakers, IEC compliant, 3-4 pole (100%) [ ] Power terminal strips (NEMA or IEC mechanical lug holes) [ ] Multiple circuit breakers [ ] Shunt trip [ ] Auxiliary contacts
Governor	• ADEM™A4	[ ] Load share module
Control Panel	• EMCP 4.1 (mounted in power center) • Speed adjust • Voltage adjustment • Emergency stop pushbutton	[ ] EMCP 4.2 [ ] Local annunciator module (NFPA 99/110) [ ] Remote annunicator module (NFPA 99/110) [ ] Digital I/O module
Lube	• Lubricating oil and filter • Oil drain line with valves • Fumes disposal • Lube oil level indicator • Oil cooler	[ ] Oil temperature sensor [ ] Manual sump pump
Mounting	• Formed steel wide base frame • Linear vibration isolation-seismic zone 4	[ ] Oil skid base [ ] Formed steel wide base frame
Starting/Charging	• 24 volt starting motor • 24 volt, 45 amp charging alternator	[ ] Jacket water heater with shut off valves [ ] Block heater [ ] Ether starting aid [ ] Battery disconnect switch [ ] Battery chargers (5 or 10 amp) [ ] Oversize batteries [ ] Batteries with rack and cables
General	• Paint - Caterpillar Yellow except rails and radiators gloss black • Flywheel housing - SAE No.1	[ ] UL 2200 package [ ] CSA Certification [ ] Weather protective enclosure [ ] Sound attenuated protective enclosure

SPECIFICATIONS

CAT GENERATOR

Frame size..... LC5014H
Excitation..... Self Excitation
Pitch..... 0.6667
Number of poles..... 4
Number of bearings..... Single bearing
Number of Leads..... 012
Insulation..... UL 1446 Recognized Class H with tropicalization and antiabrasion
- Consult your Caterpillar dealer for available voltages
IP Rating..... Drip Proof IP23
Alignment..... Pilot Shaft
Overspeed capability..... 125
Wave form Deviation (Line to Line)..... 2%
Voltage regulator..... Three phase sensing
Voltage regulation..... Less than +/- 1/2% (steady state)
Telephone influence factor..... Less than 50
Harmonic Distortion..... Less than 5%

CAT DIESEL ENGINE

C9 ATAAC, I-6, 4-Stroke Water-cooled Diesel
Bore..... 112.00 mm (4.41 in)
Stroke..... 149.00 mm (5.87 in)
Displacement..... 8.80 L (537.01 in³)
Compression Ratio..... 16.1:1
Aspiration..... Air-to-Air Aftercooled
Fuel System..... Hydraulic electronic unit injection
Governor Type..... Caterpillar ADEM control system

CAT EMCP 4 SERIES CONTROLS

EMCP 4 controls including:
- Run / Auto / Stop Control
- Speed and Voltage Adjust
- Engine Cycle Crank
- 24-volt DC operation
- Environmental sealed front face
- Text alarm/event descriptions

Digital indication for:
- RPM
- DC volts
- Operating hours
- Oil pressure (psi, kPa or bar)
- Coolant temperature
- Volts (L-L & L-N), frequency (Hz)
- Amps (per phase & average)
- ekW, kVA, kVAR, kW-hr, %kW, PF (4.2 only)

Warning/shutdown with common LED indication of:
- Low oil pressure
- High coolant temperature
- Overspeed
- Emergency stop
- Failure to start (overcrank)
- Low coolant temperature
- Low coolant level

Programmable protective relaying functions:
- Generator phase sequence
- Over/Under voltage (27/59)
- Over/Under Frequency (81 o/u)
- Reverse Power (kW) (32) (4.2 only)
- Reverse reactive power (kVAr) (32RV)
- Overcurrent (50/51)

Communications:
- Four digital inputs (4.1)
- Six digital inputs (4.2 only)
- Four relay outputs (Form A)
- Two relay outputs (Form C)
- Two digital outputs
- Customer data link (Modbus RTU) (4.2 only)
- Accessory module data link (4.2 only)
- Serial annunciator module data link (4.2 only)
- Emergency stop pushbutton

Compatible with the following:
- Digital I/O module
- Local Annunciator
- Remote CAN annunciator
- Remote serial annunciator

TECHNICAL DATA

Open Generator Set - - 1800 rpm/60 Hz/480 Volts	DM8501	
Tier 3		
Generator Set Package Performance		
Genset Power rating @ 0.8 pf	312.5 kVA	
Genset Power rating with fan	250 ekW	
Coolant to aftercooler		
Coolant to aftercooler temp max	49 ° C	120 ° F
Fuel Consumption		
100% load with fan	73.3 L/hr	19.4 Gal/hr
75% load with fan	58.8 L/hr	15.5 Gal/hr
50% load with fan	43.8 L/hr	11.6 Gal/hr
Cooling System[1]		
Air flow restriction (system)	0.12 kPa	0.48 in. water
Air flow (max @ rated speed for radiator arrangement)	497 m³/min	17551 cfm
Engine Coolant capacity with radiator/exp. tank	36.0 L	9.5 gal
Engine coolant capacity	22.0 L	5.8 gal
Radiator coolant capacity	14.0 L	3.7 gal
Inlet Air		
Combustion air inlet flow rate	25.0 m³/min	882.9 cfm
Exhaust System		
Exhaust stack gas temperature	456.6 ° C	853.9 ° F
Exhaust gas flow rate	63.5 m³/min	2242.5 cfm
Exhaust flange size (internal diameter)	170 mm	7 in
Exhaust system backpressure (maximum allowable)	5.9 kPa	23.7 in. water
Heat Rejection		
Heat rejection to coolant (total)	105 kW	5971 Btu/min
Heat rejection to exhaust (total)	277 kW	15753 Btu/min
Heat rejection to aftercooler	83 kW	4720 Btu/min
Heat rejection to atmosphere from engine	21 kW	1194 Btu/min
Heat rejection to atmosphere from generator	19.7 kW	1120.3 Btu/min
Alternator[2]		
Motor starting capability @ 30% voltage dip	543 skVA	
Frame	LC5014H	
Temperature Rise	150 ° C	270 ° F
Lube System		
Sump refill with filter	39.0 L	10.3 gal
Emissions (Nominal)[3]		
NOx g/hp-hr	2.97 g/hp-hr	
CO g/hp-hr	.36 g/hp-hr	
HC g/hp-hr	.1 g/hp-hr	
PM g/hp-hr	.079 g/hp-hr	

[1] For ambient and altitude capabilities consult your Cat dealer. Air flow restriction (system) is added to existing restriction from factory.
[2] Generator temperature rise is based on a 40° C (104° F) ambient per NEMA MG1-32.
[3] Emissions data measurement procedures are consistent with those described in EPA CFR 40 Part 89, Subpart D & E and ISO8178-1 for measuring HC, CO, PM, NOx. Data shown is based on steady state operating conditions of 77°F, 28.42 in HG and number 2 diesel fuel with 35° API and LHV of 18,390 btu/lb. The nominal emissions data shown is subject to instrumentation, measurement, facility and engine to engine variations. Emissions data is based on 100% load and thus cannot be used to compare to EPA regulations which use values based on a weighted cycle.

RATING DEFINITIONS AND CONDITIONS

Meets or Exceeds International Specifications: AS1359, CSA, IEC60034-1, ISO3046, ISO8528, NEMA MG 1-22, NEMA MG 1-33, UL508A, 72/23/EEC, 98/37/EC, 2004/108/EC

Standby - Output available with varying load for the duration of the interruption of the normal source power. Average power output is 70% of the standby power rating. Typical operation is 200 hours per year, with maximum expected usage of 500 hours per year. Standby power in accordance with ISO8528. Fuel stop power in accordance with ISO3046. Standby ambients shown indicate ambient temperature at 100% load which results in a coolant top tank temperature just below the shutdown temperature.

Ratings are based on SAE J1349 standard conditions. These ratings also apply at ISO3046 standard conditions. **Fuel rates** are based on fuel oil of 35° API [16° C (60° F)] gravity having an LHV of 42 780 kJ/kg (18,390 Btu/lb) when used at 29° C (85° F) and weighing 838.9 g/liter (7.001 lbs/U.S. gal.). Additional ratings may be available for specific customer requirements, contact your Cat representative for details. For information regarding Low Sulfur fuel and Biodiesel capability, please consult your Cat dealer.

STANDBY 250 ekW 313 kVA

60 Hz 1800 rpm 480 Volts

0-ELV-GEN-001

Emergency Diesel Generator - Common Area

DIMENSIONS

Package Dimensions		
Length	3292.0 mm	129.61 in
Width	1110.0 mm	43.7 in
Height	1844.5 mm	72.62 in
Weight	2308 kg	5,088 lb

NOTE: For reference only - do not use for installation design. Please contact your local dealer for exact weight and dimensions. (General Dimension Drawing #2778059).

Performance No.: DM8501

Feature Code: C09DE02

Gen. Arr. Number: 2541292

Source: U.S. Sourced

June 13 2011

17804067

www.Cat-ElectricPower.com

© 2011 Caterpillar
All rights reserved.

Materials and specifications are subject to change without notice. The International System of Units (SI) is used in this publication.

CAT, CATERPILLAR, their respective logos, "Caterpillar Yellow," the "Power Edge" trade dress, as well as corporate and product identity used herein, are trademarks of Caterpillar and may not be used without permission.

Diesel Generator Set

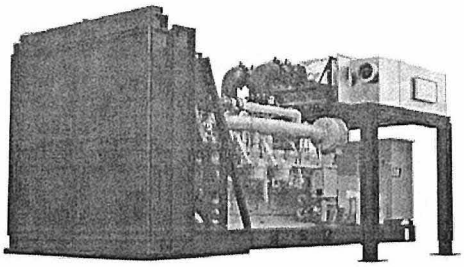

Image shown may not reflect actual package

Standby
2500 ekW 3125 kVA
60 Hz 1800 rpm 4160 Volts

Caterpillar is leading the power generation Market place with Power Solutions engineered to deliver unmatched flexibility, expandability, reliability, and cost-effectiveness.

FUEL/EMISSIONS STRATEGY
- EPA Tier 4 Interim

DESIGN CRITERIA
- The generator set accepts 100% rated load in one step per NFPA 110 and meets ISO 8528-5 transient response.

FULL RANGE OF ATTACHMENTS
- Wide range of bolt-on system expansion attachments, factory designed and tested
- Flexible packaging options for easy and cost effective installation

SINGLE-SOURCE SUPPLIER
- Fully prototype tested with certified torsional vibration analysis available

WORLDWIDE PRODUCT SUPPORT
- Cat® dealers provide extensive post sale support including maintenance and repair agreements
- Cat dealers have over 1,800 dealer branch stores operating in 200 countries.
- The Cat® SOS℠ program effectively detects internal engine component condition, even the presence of unwanted fluids and combustion by products.

CAT 3516C-HD ATAAC DIESEL ENGINE
- Reliable, rugged, durable design
- Field proven in thousands of applications worldwide
- Four-stroke diesel engine combines consistent performance and excellent fuel economy with minimum weight
- Engine performance optimized for use with Cat clean emissions module (CEM)

CAT CLEAN EMISSIONS MODULE (CEM)
- Diesel oxidation catalyst for particulate matter (PM) and hydrocarbon (HC) control
- Selective catalytic reduction (SCR) with integrated sound attenuation
- Integrated electronics for monitoring, protection, and closed loop NO_x control
- Reliable, compact, and lightweight system gives maximum installation flexibility

CAT GENERATOR
- Matched to the performance and output characteristics of Caterpillar engines
- Single point access to accessory connections
- UL 1446 Recognized Class H insulation

CAT EMCP 4 CONTROL PANELS
- Simple user friendly interface and navigation
- Scalable system to meet a wide range of customer needs
- Integrated Control System and Communications Gateway

1-EMV-GEN-001 & 2-EMV-GEN-001
Emergency Diesel Generator - Power Blocks 1 & 2

STANDBY 2500 ekW 3125 kVA

60 Hz 1800 rpm 4160 Volts

Factory Installed Standard & Optional Equipment

System	Standard	Optional
Air Inlet	• Single element canister type air cleaner with service indicator	[ ] Dual element air cleaners [ ] Air inlet adapters & shutoff
Cooling	• Radiator with guard • Fan and belt guards • Coolant drain line with valve • Coolant level sensors* • Cat Extended Life Coolant*	[ ] Jacket water heater [ ] Radiator duct flange [ ] Radiator options
Exhaust	• Exhaust manifold - dry - dual • 254 mm (10 in) ID round flanged engine outlets • Clean Emissions Module (CEM) • CEM control cabinet • Flanged outlet	[ ] Mufflers [ ] Stainless steel exhaust flex fittings [ ] Elbows, flanges, expanders, & Y adapters [ ] CEM installation package including support, exhaust connection kit, harness, and heated urea lines.
Fuel	• Secondary fuel filters • Fuel cooler* • Fuel priming pump • Flexible fuel lines-shipped loose	[ ] Duplex secondary fuel filter [ ] Primary fuel filter with fuel waters separator
Generator	• 3 Phase brushless, Salient pole • Class H insulation • Cat digital voltage regulator (CDVR) with VAR/PF control, 3-phase sensing • Winding temperature detectors • Anti-condensation space heaters	[ ] Oversize generators
Power Termination	• Bus bar (NEMA mechanical lug holes) • Right hand bottom cable entry	[ ] Left and/or rear power termination
Governor	• ADEM™ A4	[ ] Load share module
Control Panel	• User interface panel (UIP) - rear mount • EMCP 4.2 Genset Controller • AC & DC customer wiring area (right side) • Emergency Stop Pushbutton	[ ] Local & remote annunciator modules [ ] Digital I/O Module [ ] Generator temperature monitoring & protection
Lube	• Lubricating oil • Gear type lube oil pump • Integral lube oil cooler • Oil filter, filler and dipstick • Oil drain line and valve • Closed crankcase ventilation (CCV) system	[ ] Oil level regulator [ ] Deep sump oil pan [ ] Electric & air prelube pumps [ ] Manual prelube with sump pump [ ] Duplex oil filter
Mounting	• Rails - engine / generator / radiator mounting • Rubber anti-vibration mounts (shipped loose)	[ ] Spring type vibration isolator
Starting / Charging	• 24 volt starting motor(s) • Batteries with rack and cables • Battery disconnect switch • 60A charging alternator	[ ] Battery chargers (10, 20, & 50 Amp) [ ] Oversize batteries [ ] Ether starting aids [ ] Heavy duty starting motors [ ] Barring device (manual) [ ] Air starting motor with control & silencer
General	• Right hand service • Paint – Cat yellow except rails and radiators gloss black • SAE standard rotation • Flywheel and flywheel housing – SAE No. 00	

*Not included with packages without radiators

1-EMV-GEN-001 & 2-EMV-GEN-001
Emergency Diesel Generator - Power Blocks 1 & 2

STANDBY 2500 ekW 3125 kVA

60 Hz 1800 rpm 4160 Volts

SPECIFICATIONS

CAT GENERATOR

Frame 1846
Excitation .....Permanent Magnet
Pitch.....0.6667
Number of poles.....4
Number of leads.....6
Number of bearings .....Two Bearing
Insulation .....Class H
IP rating .....Drip proof IP23
Over speed capability - % of rated.....125%
Wave form deviation.....3 %
Voltage regulator..... 3 phase sensing with load adjustable module
Voltage regulation....Less than ±1/2% (steady state)
Less than ±1/2% (3% speed change)
Telephone Influence Factor .....Less than 50
Harmonic Distortion .....Less than 5%

CAT DIESEL ENGINE

3516C-HD ATAAC, V-12, 4 stroke, water-cooled diesel

Bore .....170.00 mm (6.69 in)
Stroke .....215.00 mm (8.64in)
Displacement .....78.08 L (4764.73 in^3)
Compression ratio.....14.0:1
Aspiration.....TA
Fuel system.....Electronic unit injection
Governor Type..... ADEM™ A4

CAT EMCP 4 CONTROL PANELS

EMCP 4 controls including:
- Run / Auto / Stop Control
- Speed & Voltage Adjust
- Engine Cycle Crank
- Emergency stop pushbutton

EMCP 4.2 controller features:
- 24-volt DC operation
- Environmental sealed front face
- Text alarm/event descriptions

Digital indication for:
- RPM
- DC volts
- Operating hours
- Oil pressure (psi, kPa or bar)
- Coolant temperature
- Volts (L-L & L-N), frequency (Hz)
- Amps (per phase & average)
- Power Factor (per phase & average)
- kW (per phase, average & percent)
- kVA (per phase, average & percent)
- kVAr (per phase, average & percent)
- kW-hr & kVAr-hr (total)

Warning/shutdown with common LED indication of shutdowns for:
- Low oil pressure
- High coolant temperature
- Overspeed
- Emergency stop
- Failure to start (overcrank)
- Low coolant temperature
- Low coolant level

Programmable protective relaying functions:
- Generator phase sequence
- Over/Under voltage (27/59)
- Over/Under Frequency (81 o/u)
- Reverse Power (kW) (32)
- Reverse Reactive Power (kVAr) (32RV)
- Overcurrent (50/51)

Communications
- Customer data link (Modbus RTU)
- Accessory module data link
- Serial annunciator module data link

- 6 programmable digital inputs
- 4 programmable relay outputs (Form A)
- 2 programmable relay outputs (Form C)
- 2 programmable digital outputs

Compatible with the following optional modules:
- Digital I/O module
- Local Annunciator
- Remote annunciator
- RTD module
- Thermocouple module

1-EMV-GEN-001 & 2-EMV-GEN-001
Emergency Diesel Generator - Power Blocks 1 & 2

STANDBY 2500 ekW 3125 kVA

60 Hz 1800 rpm 4160 Volts

Technical Data

Open Generator Set - 1800 rpm/60 Hz/4160 Volts	DM9370	
Tier 4 Interim		
Generator Set Package Performance		
Genset Power rating @ 0.8 pf	3125 kVA	
Genset Power Rating with fan	2500 ekW	
Fuel Consumption[1]		
100% Load with fan	654.5 L/hr	172.9 Gal/hr
75% Load with fan	495.9 L/hr	131.0 Gal/hr
50% Load with fan	355.6 L/hr	93.9 Gal/hr
Diesel Exhaust Fluid (DEF) Consumption[2]		
100% Load with fan	50.8 L/hr	13.4 Gal/hr
75% Load with fan	35.0 L/hr	9.2 Gal/hr
50% Load with fan	18.1 L/hr	4.8 Gal/hr
Cooling System[3]		
Engine coolant capacity with radiator	537 L	141.9 gal
Engine coolant capacity	233 L	61.6 gal
Radiator coolant capacity	304 L	80.3 gal
Inlet Air		
Combustion air inlet flow rate	197.8 mm^3/min	6985.4 cfm
Exhaust System[4]		
Exhaust stack gas temperature (engine out)	522.7 °C	972.9 °F
Exhaust gas flow rate	556.8 mm^3/min	19660 cfm
Exhaust system backpressure (maximum allowable)	6.7 kPA	26.9 in water
Heat Rejection		
Heat rejection to cooolant (total)	842 kW	47859 Btu/min
Heat rejection to exhaust (total)	2570 kW	146173 Btu/min
Heat rejection to aftercooler	665 kW	37831 Btu/min
Heat rejection to atmosphere from engine	168 kW	9535 Btu/min
Heat rejection to atmosphere from CEM	311 kW	17702 Btu/min
Heat rejection to atmosphere from generator	101.5 kW	5777 Btu/min
Alternator[5]		
Motor starting capabiliy @30% voltage dip	6996 skVA	
Frame	1824	
Temperature Rise	125 °C	225 °F
Lube System[6]		
Sump refil with filter	401.3 L	106 gal
Emissions (Nominal)[7]		
NOx g/hp-hr	0.59 g/hp-hr	
CO g/hp-hr	0.03 g/hp-hr	
HC g/hp-hr	0.00 g/hp-hr	
PM g/hp-hr	0.03 g/hp-hr	

[1] EPA Tier 4 Interim diesel engines required the use of Ultra Low Sulfur Diesel (ULSD) fuel in order to protect emissions control systems, help comply with emissions standards, and meet published maintenance intervals. ULSD fuel will have ≤ 15 ppm (0.0015%) sulfur using the ASTM D5453, ASTM 2622, or SIN 51400 test methods.

[2] Diesel Exhaust Fluid (DEF) is 32.5% urea in de-ionized water, defined by ISO-22241

[3] For ambient and altitude capabilities consult your Caterpillar dealer. Air flow restriction (system) is added to existing restriction from factory.

[4] Backpressure allowance is total backpressure available for the customer excluding the clean emissions module (CEM).

[5] Some packages may have oversized generators with a different temperature rise and motor starting characteristics. Generator temperature rise is based on a 40 degree C ambient per NEMA MG1-32.

[6] Requires the use of CJ4 oil in order to meet published maintenance intervals.

[7] Emissions data measurement procedures are consistent with those described in EPA CFR 40 Part 89, Subpart D & E and ISO8178-1 for measuring HC, CO, PM, NOx. Data shown is based on steady state operating conditions of 77°F, 28.42 in HG and number 2 diesel fuel with 35° API and LHV of 18,390 btu/lb. The nominal emissions data shown is subject to instrumentation, measurement, facility and engine to engine variations. Emissions data is based on 100% load and thus cannot be used to compare to EPA regulations which use values based on a weighted cycle. Emissions values are tailpipe out with aftertreatment installed. Values shown as zero may be greater than zero but were below the detection level of the equipment used at the time of measurement.

STANDBY 2500 ekW 3125 kVA

60 Hz 1800 rpm 4160 Volts

RATING DEFINITIONS AND CONDITIONS

Meets or Exceeds International Specifications: · AS1359, CSA, IEC60034-1, ISO3046, ISO8528, NEMA MG 1-22, NEMA MG 1-33, UL508A, 72/23/EEC, 98/37/EC, 2004/108/EC

Standby - Output available with varying load for the duration of the interruption of the normal source power. Average power output is 70% of the standby power rating. Typical operation is 200 hours per year, with maximum expected usage of 500 hours per year. Standby power in accordance with ISO8528. Fuel stop power in accordance with ISO3046. Standby ambients shown indicate ambient temperature at 100% load which results in a coolant top tank temperature just below the shutdown temperature.

Ratings are based on SAE J1349 standard conditions. These ratings also apply at ISO3046 standard conditions

Fuel Rates are based on fuel oil of 35° API [16° C (60° F)] gravity having an LHV of 42 780 kJ/kg (18,390 Btu/lb) when used at 29° C (85° F) and weighing 838.9 g/liter (7.001 lbs/U.S. gal.). Additional ratings may be available for specific customer requirements, contact your Cat representative for details. For information regarding Low Sulfur fuel and Biodiesel capability, please consult your Cat dealer.

1-EMV-GEN-001 & 2-EMV-GEN-001
Emergency Diesel Generator - Power Blocks 1 & 2

STANDBY 2500 ekW 3125 kVA

60 Hz 1800 rpm 4160 Volts

Dimensions

Package Dimensions		
Length	7100mm	279.5 in
Width	2588 mm	101.88 in
Height	2880 mm	113.38 in
Weight	19400 kg	42769 lb

NOTE: For reference only - do not use for installation design. Please contact your local dealer for exact weight and dimensions.

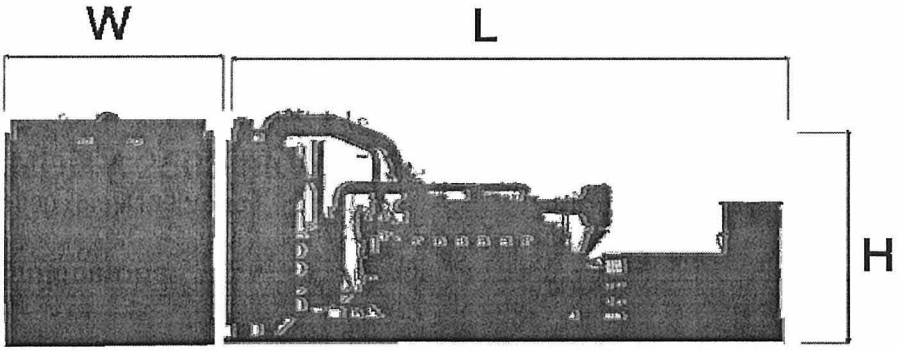

CEM Dimensions		
Length	3366 mm	132.5 in
Width	2230 mm	87.8 in
Height	894 mm	35.2 in
Weight	1814 kg	4000 lb

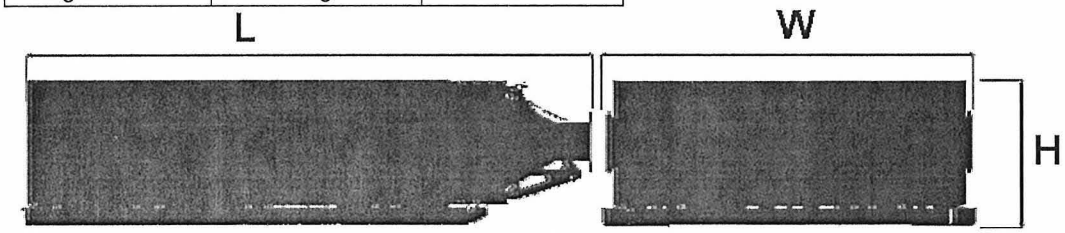

www.Cat-EectricPower.com

©2011 Caterpillar
All rights reserved.

Sourced: U.S. Sourced

October 2011

EPD0028-E

Materials and specifications are subject to change without notice. The International System of Units (SI) is used in this publication.

CAT, CATERPILLAR, SAFETY.CAT.COM their respective logos, "Caterpillar Yellow," the "Power Edge" trade dress as well as corporate and product identity used herein, are trademarks of Caterpillar and may not be used without permission.

SELECTION TABLES
Horizontal Split Case Fire Pump
Diesel Engine Drive

0-FP-CP-001
Diesel Fire Water Pump - Common Area

	Diesel Driven							
Flow GPM	Pressure (PSI)	Pressure (TDH)	Speed (RPM)	Horse Power (BHP)	Pump Size & Model	Engine Model	Engine HP	WT.
4000 GPM	64	148	1460	203	10-481-18D	CFP7E-F50	205	3800
	65	150	1460	207	10-481-18D	CFP7E-F60	218	3800
	67	155	1460	240	12-481-18A	CFP9E-F30	248	3800
	70	162	1460	252	12-481-18A	CFP9E-F40	271	5150
			1460	226	10-481-18D	CFP9E-F20	230	4300
	75	173	1460	274	12-481-18A	CFP9E-F50	289	5150
			1460	247	10-481-18D	CFP9E-F30	248	4300
	80	185	1460	297	12-481-18A	CFP9E-F60	305	5150
			1460	269	10-481-18D	CFP9E-F40	271	4300
	85	196	1460	322	12-481-18A	CFP15E-F10	382	7629
			1750	273	10-481-18D	JU6H-UFADW8	282	3947
			1460	288	10-481-18D	CFP9E-F50	289	4300
	90	208	1460	352	12-481-18A	CFP15E-F10	382	7629
			1750	302	10-481-18D	JU6H-UFADX8	305	3947
			1460	315	10-481-18D	CFP15E-F10	382	6379
	92	213	1460	325	10-481-18D	CFP15E-F10	382	6379
	94	217	1750	363	10-491-20	JW6H-UFAD70	376	7634
	95	219	1460	385	12-481-18A	CFP15E-F20	410	7629
			1750	317	10-481-18	JW6H-UFADF0	327	4769
			1750	366	10-491-20	JW6H-UFAD70	376	7634
			1750	324	10-481-18D	JW6H-UFADF0	327	4294
	100	231	1460	430	12-481-18A	CFP15E-F30	450	7629
			1750	330	10-481-18	JW6H-UFADJ0	350	4769
			1750	383	10-491-20	JW6H-UFAD80	422	7634
			1750	347	10-481-18D	JW6H-UFADJ0	350	4294
	102	236	1460	450	12-481-18A	CFP15E-F30	450	7629
	105	243	1750	365	10-481-18	JW6H-UFAD70	376	4769
			1750	401	10-491-20	JW6H-UFAD80	422	7634
			1750	373	10-481-18D	JW6H-UFAD70	376	4294
	109	252	1750	381	10-481-18	JW6H-UFAD80	422	4769
			1750	417	10-491-20	JW6H-UFAD80	422	7634
	110	254	1750	381	10-481-18	JW6H-UFAD80	422	4769
			1750	421	10-491-20	JW6H-UFAD80	422	7634
			1900	438	10-491-20	CFP15E-F10	488	9719
			1750	397	10-481-18D	JW6H-UFAD80	422	4294
	115	266	1750	444	10-491-20	JX6H-UFADF0	460	8790
			1900	464	10-491-20	CFP15E-F10	488	9719
			1750	419	10-481-18D	JW6H-UFAD80	422	4294
	120	277	1750	468	10-491-20	JX6H-UFAD60	510	8790
			1900	491	10-491-20	CFP15E-F20	524	9719
			1750	447	10-481-18D	JX6H-UFADF0	460	5450
	125	289	1750	494	10-491-20	JX6H-UFAD60	510	8790
			1900	518	10-491-20	CFP15E-F20	524	9719
			1750	475	10-481-18D	JX6H-UFAD60	510	5450
	130	300	1750	522	10-491-20	JX6H-UFADN0	542	8845
			1900	546	10-491-20	CFP15E-F30	575	9719
			1750	500	10-481-18D	JX6H-UFAD60	510	5450
	134	310	1750	527	10-481-18D	JX6H-UFADN0	542	5450
	135	312	1750	551	10-491-20	JX6H-UFADP0	575	8845
			1900	574	10-491-20	CFP15E-F30	575	9774
	140	323	1750	581	10-491-20	JX6H-UFAD88	617	8845
			1900	603	10-491-20	CFP15E-F40	610	9774
	145	335	1750	613	10-491-20	JX6H-UFAD88	617	8,845
			1900	632	10-491-20	Cat 18 (700)	700	10,695
	150	347	1750	645	10-491-20	Cat 18 (700)	700	10,695
			1900	662	10-491-20	Cat 18 (700)	700	10,695
	155	358	1750	671	10-491-20	Cat 18 (700)	700	10,695
			1900	693	10-491-20	Cat 18 (700)	700	10,695
	160	370	1750	698	10-491-20	Cat 18 (700)	700	10,695
			1900	724	10-491-20	Cat 18 (800)	800	10,695
	165	381	1750	728	10-491-20	Cat 18 (800)	800	10,695
			1900	753	10-491-20	Cat 18 (800)	800	10,695

*UL listed only.

CLARKE®

FIRE PUMP ENGINES

MODELS

JX6H-UFADF0 JX6H-UFADN0
JX6H-UFAD60 JX6H-UFADP0
JX6H-UFADK0 JX6H-UFAD88

FM-UL-cUL APPROVED RATINGS BHP/*KW*

JX6H MODEL ♦	RATED SPEED 1760		RATED SPEED 2100		US-EPA (NSPS) Available Until ●
UFADF0	460	*343*	488	*364*	*No Expiration*
UFAD60	510	*380*	525	*392*	*No Expiration*
UFADN0	542	*404*	575	*429*	*No Expiration*
UFADP0	575	*429*	600	*447*	*No Expiration*
UFAD88	617	*460*			*No Expiration*

● USA EPA (NSPS) Tier 3 Emissions Certified Off-Road (40 CFR Part 89) and NSPS Stationary (40 CFR Part 60 Sub Part IIII). Meet EU Stage IIIA emission levels.

♦ All Models are available for Export

0-FP-CP-001
Diesel Fire Water Pump - Common Area

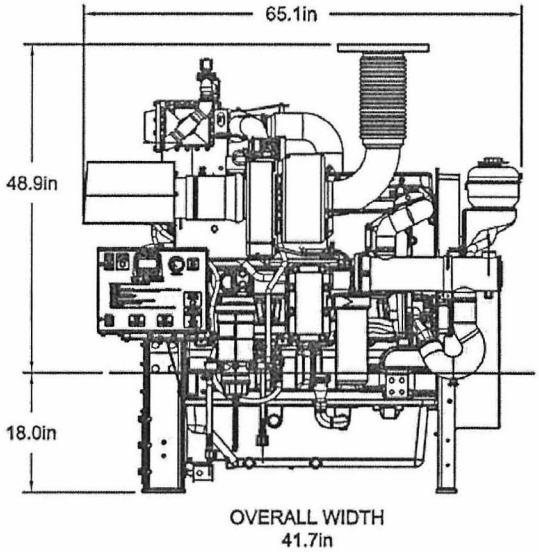

SPECIFICATIONS

ITEM	JX6H MODELS UFADF0	UFAD60	UFADN0	UFADP0	UFAD88
Number of Cylinders	6				
Aspiration	TRWA				
Rotation*	CW				
Weight – lb (kg)	3315 (1500)				
Compression Ratio	16.0:1				
Displacement – cu. in. (l)	824 (13.5)				
Engine Type	4 Stroke Cycle – Inline Construction				
Bore & Stroke – in. (mm)	5.20 X 6.50 (132 X 165)				
Installation Drawing	D626				
Wiring Diagram AC	C07651				
Wiring Diagram DC	C071360, C071361, C071371				
Engine Series	John Deere 6135 Series Power Tech Plus				
Speed Interpolation	N/A				

Abbreviations: CW – Clockwise TRWA – Turbocharged with Raw Water Aftercooling N/A – Not Available

*Rotation viewed from Heat Exchanger / Front of engine

CERTIFIED POWER RATING

- Each engine is factory tested to verify power and performance.
- FM-UL power ratings are shown at specific speeds, Clarke engines can be applied at a single rated RPM setting ± 50 RPM.

ENGINE RATINGS BASELINES

- Engines are to be used for stationary emergency standby fire pump service only. Engines are to be tested in accordance with NFPA 25.
- Engines are rated at standard SAE conditions of 29.61 in. (752.1 mm) Hg barometer and 77°F (25°C) inlet air temperature [approximates 300 ft. (91.4 m) above sea level] by the testing laboratory (see SAE Standard J 1349).
- A deduction of 3 percent from engine horsepower rating at standard SAE conditions shall be made for diesel engines for each 1000 ft. (305 m) altitude above 300 ft. (91.4 m)
- A deduction of 1 percent from engine horsepower rating as corrected to standard SAE conditions shall be made for diesel engines for every 10°F (5.6°C) above 77°F (25°C) ambient temperature.

c UL us

Meets NFPA 20 Requirements

FM c us APPROVED

MODELS

JX6H-UFADF0 JX6H-UFADN0
JX6H-UFAD60 JX6H-UFADP0
JX6H-UFADK0 JX6H-UFAD88

ENGINE EQUIPMENT

EQUIPMENT	STANDARD	OPTIONAL
Air Cleaner	Direct Mounted, Washable, Indoor Service with Drip Shield	Disposable, Drip Proof, Indoor Service Outdoor Type, Single or Two Stage
Alternator	24V-DC, 40 Amps with Poly-Vee Belt and Guard	
Exhaust Protection	Metal Guards on Manifolds and Turbocharger	
Coupling	Bare Flywheel	Driveshaft and Guard, SC2160A
Electronic Control Module	24V-DC, Energized to Stop, Primary ECM always Powered on	
Exhaust Flex Connection*	Stainless Steel Flex, 150# ANSI Flanged Connection, 8"	Stainless Steel Flex, 150# ANSI Flanged Connection, 10"
Flywheel Housing	SAE #1	
Flywheel Power Take Off	11.5" SAE Industrial Flywheel Connection	
Fuel Connections	Fire Resistant, Flexible, USA Coast Guard Approved, Supply and Return Lines	Stainless Steel, Braided, cUL Listed, Supply and Return Lines
Fuel Filter	Primary Filter with Priming Pump	
Fuel Injection System	Unit Injector	
Engine Heater	240V-AC, 2500 Watt	120V-AC, 2500 Watt
Governor, Speed	Electronic, Dual Electronic Engine Control Modules	
Heat Exchanger	Tube and Shell Type, 60 PSI (4 BAR), NPT(F) Connections – Sea/Salt Water Compatible	
Instrument Panel	Multimeter to Display English and Metric, Tachometer, Hourmeter, Water Temperature, Oil Pressure and One (1) Voltmeter with Toggle Switch, Front Opening	
Junction Box	Integral with Instrument Panel; For DC Wiring Interconnection to Engine Controller	
Lube Oil Cooler	Engine Water Cooled, Plate Type	
Lube Oil Filter	Full Flow with By-Pass Valve	
Lube Oil Pump	Gear Driven, Gear Type	
Manual Start Control	On Instrument Panel with Control Position Warning Light	
Overspeed Control	Electronic, Factory Set, Not Field Adjustable	
Raw Water Solenoid Operation	Automatic from Fire Pump Controller and from Engine Instrument Panel	
Run – Stop Control	On Instrument Panel with Control Position Warning Light	
Starters	One (1) 24V-DC with Two (2) Start Contactors	
Throttle Control	Adjustable Speed Control by Increase/Decrease Button, Tamper Proof in Instrument Panel	
Water Pump	Centrifugal Type, Gear Driven	

Abbreviations : DC – Direct Current, AC – Alternating Current, SAE – Society of Automotive Engineers, NPT(F) – National Pipe Tapered Thread (Female), NPT(M) – National Pipe Tapered Thread (Male), ANSI – American National Standards Institute

Note : Engine Controller needs two (2) additional signals: Injector Failure, Alternate ECM Selected

*JX6H-UFADF0/60/K0/N0/P0/88 All provided with orifice plate mounted in flex exhaust.

0-FP-CP-001
Diesel Fire Water
Pump - Common
Area

MODEL NOMENCLATURE (10 Digit Models)

J X 6 H - UF A D F0

- J — John Deere Base Engine
- X — 650 Series
- 6 — 6 Cylinder
- H — Heat Exchanger Cooled
- UF — UL Listed and FM Approved
- A — Built in USA
- D — EPA Tier 3 Certified
- F0 — Power Curve Number

CLARKE®

CLARKE Fire Protection Products, Inc.
3133 E. Kemper Rd., Cincinnati, Ohio 45241
United States of America
Tel +1-513-475-FIRE(3473) Fax +1-513-771-0726
www.clarkefire.com

CLARKE UK, Ltd.
Grange Works, Lomond Rd., Coatbridge, ML5-2NN
United Kingdom
Tel +44-1236-429946 Fax +44-1236-427274
www.clarkefire.com

C133423 revl
10APR12

Specifications and information contained in this brochure subject to change without notice.

Rating Specific Emissions Data - John Deere Power Systems

JOHN DEERE

Nameplate Rating Information

Clarke Model	JX6H-UFAD88
Power Rating (BHP / kW)	617 / 460
Certified Speed (RPM)	1760

Rating Data

Rating	6135HFC48B	
Certified Power (kW)	460	
Rated Speed	1760	
Vehicle Model Number	Clarke Fire Pump	
Units	g/kW-hr	g/hp-hr
NOx	3.5	2.6
HC	0.1	0.1
NOx + HC	3.6	2.7
Pm	0.12	0.09
CO	0.7	0.5

Certificate Data

Engine Model Year	2012
EPA Family Name	CJDXL13.5103
EPA JD Name	650HAA
EPA Certificate Number	CJDXL13.5103-020
CARB Executive Order	Not Applicable
Parent of Family	6135HF485A
Units	g/kW-hr
NOx	3.3
HC	0.1
NOx + HC	3.4
Pm	0.10
CO	0.6

* The emission data listed is measured from a laboratory test engine according to the test procedures of 40 CFR 89 or 40 CFR 1039, as applicable. The test engine is intended to represent nominal production hardware, and we do not guarantee that every production engine will have identical test results. The family parent data represents multiple ratings and this data may have been collected at a different engine speed and load. Emission results may vary due to engine manufacturing tolerances, engine operating conditions, fuels used, or other conditions beyond our control.

This information is property of Deere & Company. It is provided solely for the purpose of obtaining certification or permits of Deere powered equipment. Unauthorized distribution of this information is prohibited

DATUMS:

-A- - MOUNTING FACE OF FLYWHEEL

-B- - ENGINE CRANKSHAFT HORIZONTAL CENTERLINE

-C- - ENGINE CRANKSHAFT VERTICAL CENTERLINE

- CENTER OF GRAVITY OF ENGINE

- CLOCKWISE ROTATION WHEN VIEWED FROM FRONT OF ENGINE

CAUTION:

ALL PLUMBING MUST BE SUPPORTED AND/OR ISOLATED SO THAT NO WEIGHT OR STRESS IS APPLIED TO ANY ENGINE COMPONENT

ATTENTION

REFER TO THE SPECIFIC MODEL "INSTALLATION AND OPERATION DATA" FOR INSTALLATION GUIDELINES

"TRWA" (TURBOCHARGED w/ RAW WATER AFTERCOOLING) MODELS	JX6H-UFADF0, -UFAD60, JX6H-UFADK0*, -UFADN0, JX6H-UFADP0, -UFAD88

(*) INDICATES PLD ENGINE MODEL ONLY

Attachment 3
Revision 1
Page 5 of 6

0-FP-CP-001
Diesel Fire Water Pump
Common Area

FOR ENGINES BUILT IN USA BEGINNING JANUARY 2013

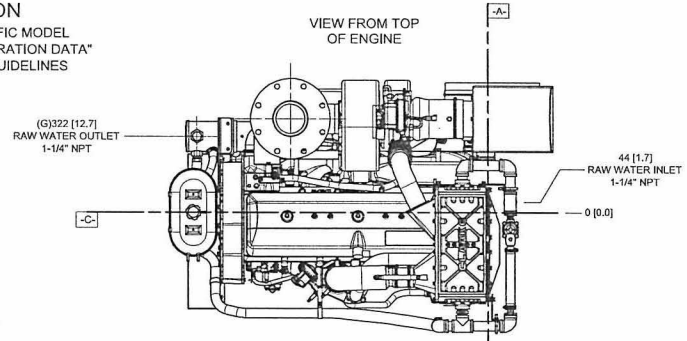

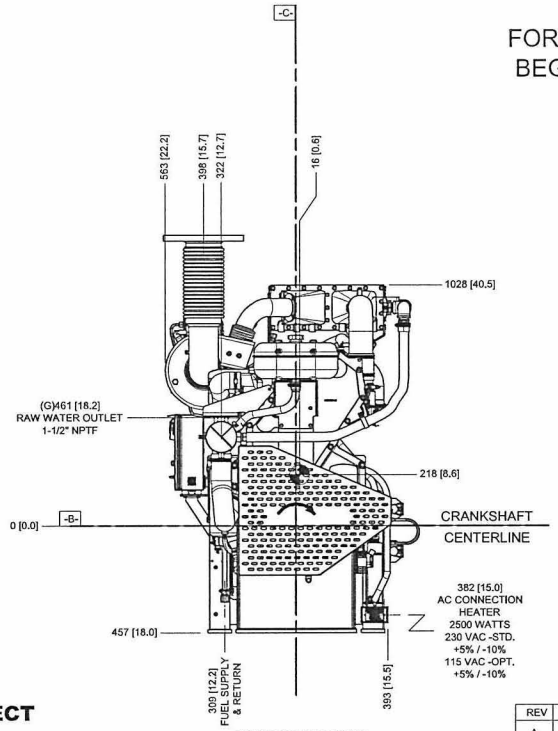

VIEW FROM FRONT OF ENGINE

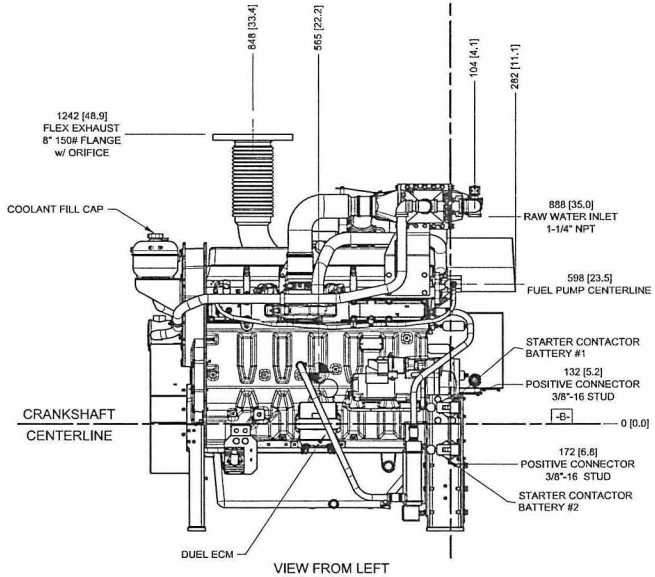

VIEW FROM LEFT SIDE OF ENGINE

DRAWING SUBJECT TO CHANGE WITHOUT NOTICE

DO NOT SCALE

REV	DESCRIPTION	ECN#	DWN	APVD	DATE
A	ISSUED ENGINEERING DRAWING	574	MAL	RTE	02SEP08
B	GENERAL CHANGES MADE TO DRAWING	574	MWL	RTE	27FEB09
C	FLYWHEEL HOUSING WAS INCORRECTLY LABELED AS SAE #2 (PAGE 2)	1858	MJD	MJD	04DEC09
D	TEMP CONTROL LAYOUT CHANGED	2260	JCA	RTE	09JUN11
E	REMOVED JX6H-UFADK0 AS NON-PLD	—	MLL	KRW	18JUL11
F	*FLYWHEEL DIM. REF. B.C. INSTEAD OF O.D.	—	DGP	KRW	02AUG11
G	RAW WATER OUTLET WAS 1-1/4" NPTF	2649	MOH	RTE	29OCT12

THIS DRAWING AND THE INFORMATION HEREON ARE OUR PROPERTY AND MAY BE USED BY OTHERS ONLY AS AUTHORIZED BY US. UNPUBLISHED—ALL RIGHTS RESERVED UNDER THE COPYRIGHT LAWS.

MACHINE TOLERANCE

DECIMAL	mm	inch
X	± 1.5	
X.X	± 0.3	± 0.01
X.XX	± 0.3	± 0.01
X.XXX	± 0.025	± 0.001
X.XXXX		± 0.0001

ANGULAR: ± 0.5°

FABRICATION TOLERANCE

DECIMAL	mm	inch
X	± 3	
X.X	± 1.5	± 0.12
X.XX		± 0.06

ANGULAR: ± 1.0°

MS1 MS2 CONTROLLED DRAWING

CLARKE *Fire Protection Products, Inc.*

DRWN	MWLEMING
DATE	8/1/2008
ENGR.	KJKUNKLER
MATERIAL	
ASSEMBLY	

NAME: INSTALLATION DRAWING, FIRE PUMP ENGINE JX6H TIER 3 MODELS

PART NO. D626 REV. G

SCALE: NTS UNITS: MM [INCH] PAGE 1 OF 2

0-FP-CP-001
Diesel Fire Water Pump
Common Area

FOR ENGINE SPECIFIC OPTIONS
SEE www.CLARKEFIRE.com

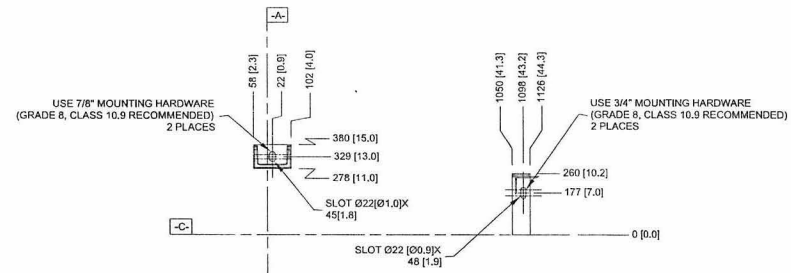

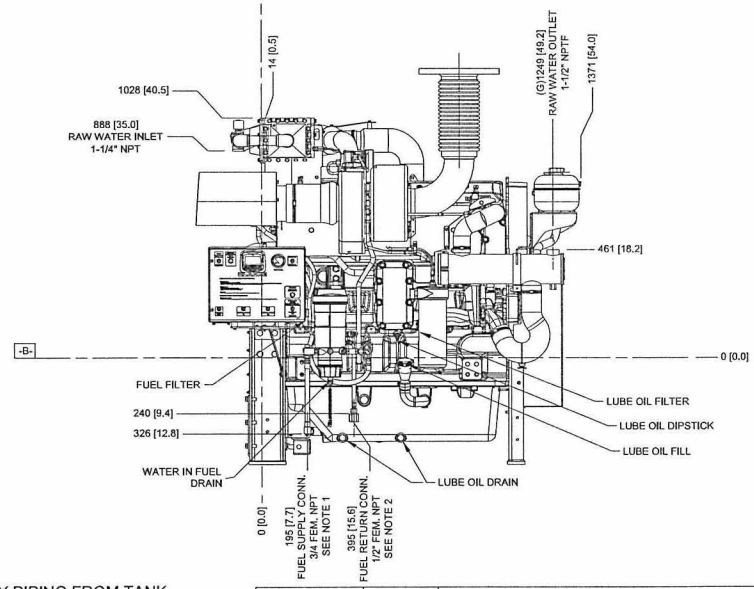

DETAIL DATUM -A-

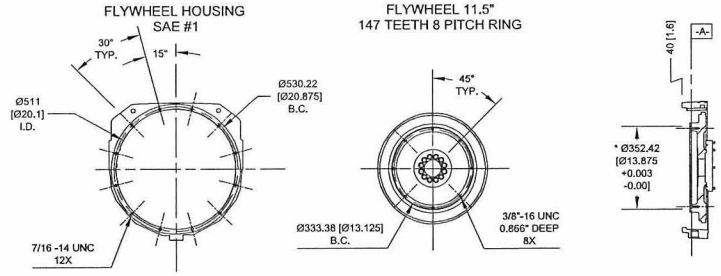

NOTES:
1. FUEL SUPPLY PIPING FROM TANK TO ENGINE SHOULD BE 3/4" MINIMUM PIPE DIAMETER.
2. FUEL RETURN PIPING FROM ENGINE TO TANK SHOULD BE 1/2" MINIMUM PIPE DIAMETER.

THIS DRAWING AND THE INFORMATION HEREON ARE OUR PROPERTY AND MAY BE USED BY OTHERS ONLY AS AUTHORIZED BY US. UNPUBLISHED--ALL RIGHTS RESERVED UNDER THE COPYRIGHT LAWS.

MACHINE TOLERANCE

DECIMAL	mm	Inch
X.	± 1.6	
X.X	± 0.4	± 0.06
X.XX	± 0.3	± 0.03
X.XXX	± 0.05	± 0.01
X.XXXX		± 0.001

ANGULAR: ± 0.5°

FABRICATION TOLERANCE

DECIMAL	mm	Inch
X.	± 3	
X.X	± 1.5	± 0.12
X.XX		± 0.06

ANGULAR: ± 1.0°

CONTROLLED DRAWING

CLARKE
Fire Protection Products, Inc.

DRAWN: MWLEMING
DATE: 8/1/2008
ENGR: KJKUNKLER
MATERIAL
ASSEMBLY

NAME: INSTALLATION DRAWING, FIRE PUMP ENGINE JX6H TIER 3 MODELS

PART NO.: D626
REV: G
SCALE: NTS
UNITS: MM [INCH]
PAGE 2 OF 2

SELECTION TABLES
Horizontal Split Case Fire Pump
Diesel Engine Drive

1-FP-CP-001
2-FP-CP-001
Diesel Fire Water Pump - Power Blocks 1 & 2

	Diesel Driven							
	Pressure							
Flow GPM	(PSI)	(TDH)	Speed (RPM)	Horse Power (BHP)	Pump Size & Model	Engine Model	Engine HP	WT.
50000 GPM	88	203	1750	363	10-491-20	JW6H-UFAD70	376	7634
	90	208	1750	368	10-491-20	JW6H-UFAD70	376	7634
	91	210	1750	348	10-481-18D	JW6H-UFADJ0	350	4294
	95	219	1750	380	10-491-20	JW6H-UFAD80	422	7634
			1750	367	10-481-18D	JW6H-UFAD70	376	4294
	100	231	1750	396	10-491-20	JW6H-UFAD80	422	7634
			1750	394	10-481-18D	JW6H-UFAD80	422	4294
	101	233	1750	400	10-491-20	JW6H-UFAD80	422	7634
	102	236	1750	404	10-491-20	JW6H-UFAD80	422	7634
			1900	438	10-491-20	CFP15E-F10	488	9719
	105	243	1750	415	10-491-20	JW6H-UFAD80	422	7634
			1900	452	10-491-20	CFP15E-F10	488	9719
			1750	419	10-481-18D	JW6H-UFAD80	422	4294
	110	254	1750	436	10-491-20	JX6H-UFADF0	460	8790
			1900	476	10-491-20	CFP15E-F10	488	9719
			1750	445	10-481-18D	JX6H-UFADF0	460	5450
	114	263	1750	456	10-491-20	JX6H-UFADF0	460	8790
			1900	496	10-491-20	CFP15E-F20	524	9719
	115	266	1750	460	10-491-20	JX6H-UFADF0	460	8790
			1900	501	10-491-20	CFP15E-F20	524	9719
			1750	469	10-481-18D	JX6H-UFAD60	510	5450
	120	277	1750	486	10-491-20	JX6H-UFAD60	510	8790
			1900	526	10-491-20	CFP15E-F30	575	9719
			1750	499	10-481-18D	JX6H-UFAD60	510	5450
	125	289	1750	515	10-491-20	JX6H-UFADN0	542	8845
			1900	553	10-491-20	CFP15E-F30	575	9719
			1750	529	10-481-18D	JX6H-UFADN0	542	5530
	130	300	1750	545	10-491-20	JX6H-UFADP0	575	8845
			1900	579	10-491-20	CFP15E-F40	610	9719
			1750	553	10-481-18D	JX6H-UFADP0	575	5530
	135	312	1750	576	10-491-20	JX6H-UFAD88	617	8790
			1900	607	10-491-20	CFP15E-F40	610	9719
	140	323	1750	609	10-491-20	JX6H-UFAD88	617	8790
			1900	635	10-491-20	Cat 18 (700)	700	10640
	145	335	1750	643	10-491-20	Cat 18 (700)	700	10640
			1900	663	10-491-20	Cat 18 (700)	700	10640
	150	347	1750	670	10-491-20	Cat 18 (700)	700	10640
			1900	693	10-491-20	Cat 18 (700)	700	10640
	155	358	1750	699	10-491-20	Cat 18 (700)	700	10640
			1900	723	10-491-20	Cat 18 (800)	800	10640
	160	370	1750	728	10-491-20	Cat 18 (800)	800	10640
			1900	753	10-491-20	Cat 18 (800)	800	10640
	165	381	1750	757	10-491-20	Cat 18 (800)	800	10640
			1900	784	10-491-20	Cat 18 (800)	800	10640
	170	393	1750	785	10-491-20	Cat 18 (800)	800	10640
			1900	815	10-491-20	RTF	860	10640
	175	404	1750	820	10-491-20	RTF	RTF	RTF
			1900	846	10-491-20	RTF	860	10640
	180	416	1750	845	10-491-20	RTF	RTF	RTF
			1900	877	10-491-20	RTF	RTF	RTF
	185	427	1750	875	10-491-20	RTF	RTF	RTF
			1900	908	10-491-20	RTF	RTF	RTF
	190	439	1750	905	10-491-20	RTF	RTF	RTF
			1900	938	10-491-20	RTF	RTF	RTF
	195	450	1750	935	10-491-20	RTF	RTF	RTF
			1900	969	10-491-20	RTF	RTF	RTF
	200	462	1900	1000	10-491-20	RTF	RTF	RTF
	205	474	1900	1031	10-491-20	RTF	RTF	RTF
	210	485	1900	1062	10-491-20	RTF	RTF	RTF
	215	497	1900	1093	10-491-20	RTF	RTF	RTF
	220	508	1900	1124	10-491-20	RTF	RTF	RTF
	221	511	1900	1130	10-491-20	RTF	RTF	RTF

*UL listed only.

MODELS

JX6H-UFADF0 JX6H-UFADN0
JX6H-UFAD60 JX6H-UFADP0
JX6H-UFADK0 JX6H-UFAD88

FM-UL-cUL APPROVED RATINGS BHP/*KW*

JX6H MODEL ♦	RATED SPEED 1760		RATED SPEED 2100		US-EPA (NSPS) Available Until ●
UFADF0	460	*343*	488	*364*	*No Expiration*
UFAD60	510	*380*	525	*392*	*No Expiration*
UFADN0	542	*404*	575	*429*	*No Expiration*
UFADP0	575	*429*	600	*447*	*No Expiration*
UFAD88	617	*460*			*No Expiration*

● USA EPA (NSPS) Tier 3 Emissions Certified Off-Road (40 CFR Part 89) and NSPS Stationary (40 CFR Part 60 Sub Part IIII). Meet EU Stage IIIA emission levels.

♦ All Models are available for Export

1-FP-CP-001
2-FP-CP-001
Diesel Fire Water Pump - Power Blocks 1 & 2

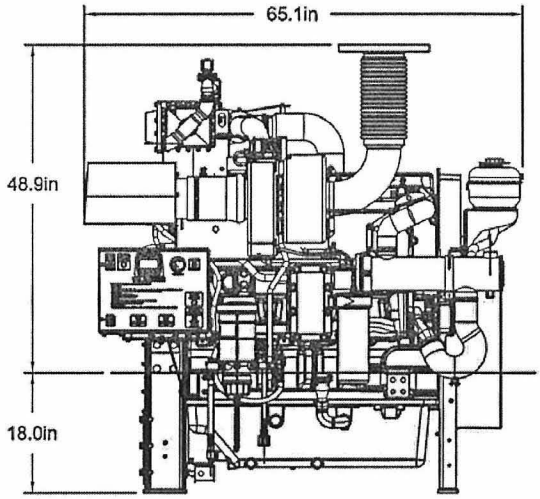

OVERALL WIDTH
41.7in

SPECIFICATIONS

ITEM	JX6H MODELS UFADF0	UFAD60	UFADN0	UFADP0	UFAD88
Number of Cylinders	6				
Aspiration	TRWA				
Rotation*	CW				
Weight – lb (kg)	3315 (1500)				
Compression Ratio	16.0:1				
Displacement – cu. in. (l)	824 (13.5)				
Engine Type	4 Stroke Cycle – Inline Construction				
Bore & Stroke – in. (mm)	5.20 X 6.50 (132 X 165)				
Installation Drawing	D626				
Wiring Diagram AC	C07651				
Wiring Diagram DC	C071360, C071361, C071371				
Engine Series	John Deere 6135 Series Power Tech Plus				
Speed Interpolation	N/A				

Abbreviations: CW – Clockwise TRWA – Turbocharged with Raw Water Aftercooling N/A – Not Available

*Rotation viewed from Heat Exchanger / Front of engine

CERTIFIED POWER RATING

- Each engine is factory tested to verify power and performance.
- FM-UL power ratings are shown at specific speeds, Clarke engines can be applied at a single rated RPM setting ± 50 RPM.

ENGINE RATINGS BASELINES

- Engines are to be used for stationary emergency standby fire pump service only. Engines are to be tested in accordance with NFPA 25.
- Engines are rated at standard SAE conditions of 29.61 in. (752.1 mm) Hg barometer and 77°F (25°C) inlet air temperature [approximates 300 ft. (91.4 m) above sea level] by the testing laboratory (see SAE Standard J 1349).
- A deduction of 3 percent from engine horsepower rating at standard SAE conditions shall be made for diesel engines for each 1000 ft. (305 m) altitude above 300 ft. (91.4 m)
- A deduction of 1 percent from engine horsepower rating as corrected to standard SAE conditions shall be made for diesel engines for every 10°F (5.6°C) above 77°F (25°C) ambient temperature.

c UL us

Meets NFPA 20 Requirements

FM APPROVED

MODELS
JX6H-UFADF0 JX6H-UFADN0
JX6H-UFAD60 JX6H-UFADP0
JX6H-UFADK0 JX6H-UFAD88

ENGINE EQUIPMENT

EQUIPMENT	STANDARD	OPTIONAL
Air Cleaner	Direct Mounted, Washable, Indoor Service with Drip Shield	Disposable, Drip Proof, Indoor Service Outdoor Type, Single or Two Stage
Alternator	24V-DC, 40 Amps with Poly-Vee Belt and Guard	
Exhaust Protection	Metal Guards on Manifolds and Turbocharger	
Coupling	Bare Flywheel	Driveshaft and Guard, SC2160A
Electronic Control Module	24V-DC, Energized to Stop, Primary ECM always Powered on	
Exhaust Flex Connection*	Stainless Steel Flex, 150# ANSI Flanged Connection, 8"	Stainless Steel Flex, 150# ANSI Flanged Connection, 10"
Flywheel Housing	SAE #1	
Flywheel Power Take Off	11.5" SAE Industrial Flywheel Connection	
Fuel Connections	Fire Resistant, Flexible, USA Coast Guard Approved, Supply and Return Lines	Stainless Steel, Braided, cUL Listed, Supply and Return Lines
Fuel Filter	Primary Filter with Priming Pump	
Fuel Injection System	Unit Injector	
Engine Heater	240V-AC, 2500 Watt	120V-AC, 2500 Watt
Governor, Speed	Electronic, Dual Electronic Engine Control Modules	
Heat Exchanger	Tube and Shell Type, 60 PSI (4 BAR), NPT(F) Connections – Sea/Salt Water Compatible	
Instrument Panel	Multimeter to Display English and Metric, Tachometer, Hourmeter, Water Temperature, Oil Pressure and One (1) Voltmeter with Toggle Switch, Front Opening	
Junction Box	Integral with Instrument Panel; For DC Wiring Interconnection to Engine Controller	
Lube Oil Cooler	Engine Water Cooled, Plate Type	
Lube Oil Filter	Full Flow with By-Pass Valve	
Lube Oil Pump	Gear Driven, Gear Type	
Manual Start Control	On Instrument Panel with Control Position Warning Light	
Overspeed Control	Electronic, Factory Set, Not Field Adjustable	
Raw Water Solenoid Operation	Automatic from Fire Pump Controller and from Engine Instrument Panel	
Run – Stop Control	On Instrument Panel with Control Position Warning Light	
Starters	One (1) 24V-DC with Two (2) Start Contactors	
Throttle Control	Adjustable Speed Control by Increase/Decrease Button, Tamper Proof in Instrument Panel	
Water Pump	Centrifugal Type, Gear Driven	

Abbreviations : DC – Direct Current, AC – Alternating Current, SAE – Society of Automotive Engineers, NPT(F) – National Pipe Tapered Thread (Female), NPT(M) – National Pipe Tapered Thread (Male), ANSI – American National Standards Institute

Note : Engine Controller needs two (2) additional signals: Injector Failure, Alternate ECM Selected

*JX6H-UFADF0/60/K0/N0/P0/88 All provided with orifice plate mounted in flex exhaust.

MODEL NOMENCLATURE (10 Digit Models)

J X 6 H - UF A D F0

- J — John Deere Base Engine
- X — 650 Series
- 6 — 6 Cylinder
- H — Heat Exchanger Cooled
- UF — UL Listed and FM Approved
- A — Built in USA
- D — EPA Tier 3 Certified
- F0 — Power Curve Number

1-FP-CP-001
2-FP-CP-001
Diesel Fire Water Pump - Power Blocks 1 & 2

CLARKE®

CLARKE Fire Protection Products, Inc.
3133 E. Kemper Rd., Cincinnati, Ohio 45241
United States of America
Tel +1-513-475-FIRE(3473) Fax +1-513-771-0726
www.clarkefire.com

CLARKE UK, Ltd.
Grange Works, Lomond Rd., Coatbridge, ML5-2NN
United Kingdom
Tel +44-1236-429946 Fax +44-1236-427274
www.clarkefire.com

C133423 revl
10APR12

Specifications and information contained in this brochure subject to change without notice.

Rating Specific Emissions Data - John Deere Power Systems

JOHN DEERE

1-FP-CP-001
2-FP-CP-001
Diesel Fire Water Pump
Power Blocks 1 & 2

Nameplate Rating Information

Clarke Model	JX6H-UFAD88
Power Rating (BHP / kW)	617 / 460
Certified Speed (RPM)	1760

Rating Data

Rating	6135HFC48B	
Certified Power (kW)	460	
Rated Speed	1760	
Vehicle Model Number	Clarke Fire Pump	
Units	g/kW-hr	g/hp-hr
NOx	3.5	2.6
HC	0.1	0.1
NOx + HC	3.6	2.7
Pm	0.12	0.09
CO	0.7	0.5

Certificate Data

Engine Model Year	2012
EPA Family Name	CJDXL13.5103
EPA JD Name	650HAA
EPA Certificate Number	CJDXL13.5103-020
CARB Executive Order	Not Applicable
Parent of Family	6135HF485A
Units	g/kW-hr
NOx	3.3
HC	0.1
NOx + HC	3.4
Pm	0.10
CO	0.6

* The emission data listed is measured from a laboratory test engine according to the test procedures of 40 CFR 89 or 40 CFR 1039, as applicable. The test engine is intended to represent nominal production hardware, and we do not guarantee that every production engine will have identical test results. The family parent data represents multiple ratings and this data may have been collected at a different engine speed and load. Emission results may vary due to engine manufacturing tolerances, engine operating conditions, fuels used, or other conditions beyond our control.

This information is property of Deere & Company. It is provided solely for the purpose of obtaining certification or permits of Deere powered equipment. Unauthorized distribution of this information is prohibited

DATUMS:

-A- - MOUNTING FACE OF FLYWHEEL

-B- - ENGINE CRANKSHAFT HORIZONTAL CENTERLINE

-C- - ENGINE CRANKSHAFT VERTICAL CENTERLINE

- CENTER OF GRAVITY OF ENGINE

- CLOCKWISE ROTATION WHEN VIEWED FROM FRONT OF ENGINE

CAUTION:

ALL PLUMBING MUST BE SUPPORTED AND/OR ISOLATED SO THAT NO WEIGHT OR STRESS IS APPLIED TO ANY ENGINE COMPONENT

"TRWA" (TURBOCHARGED w/ RAW WATER AFTERCOOLING) MODELS	JX6H-UFADF0, -UFAD60, JX6H-UFADK0*, -UFADN0, JX6H-UFADP0, -UFAD88

(*) INDICATES PLD ENGINE MODEL ONLY

ATTENTION

REFER TO THE SPECIFIC MODEL "INSTALLATION AND OPERATION DATA" FOR INSTALLATION GUIDELINES

Attachment 4
Revision 1
Page 5 of 6

1-FP-CP-001 & 2-FP-CP-001
Diesel Fire Water Pump
Power Blocks 1 & 2

FOR ENGINES BUILT IN USA
BEGINNING JANUARY 2013

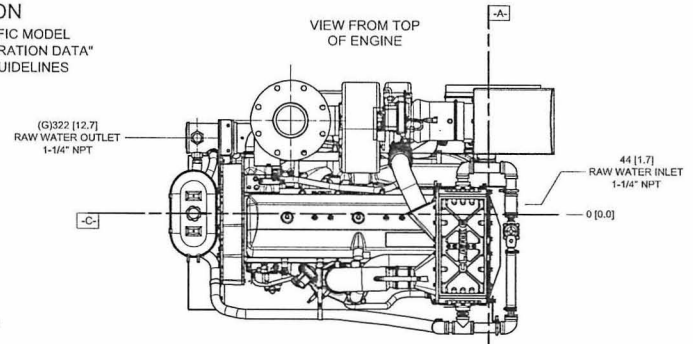

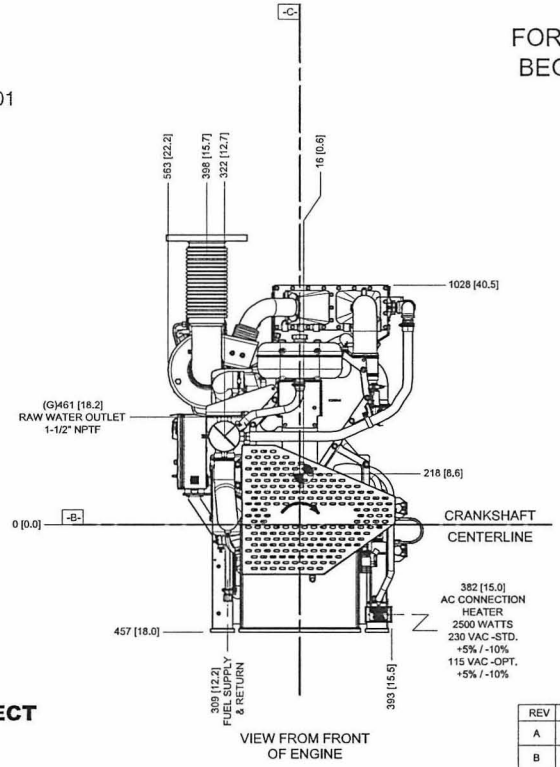

VIEW FROM FRONT OF ENGINE

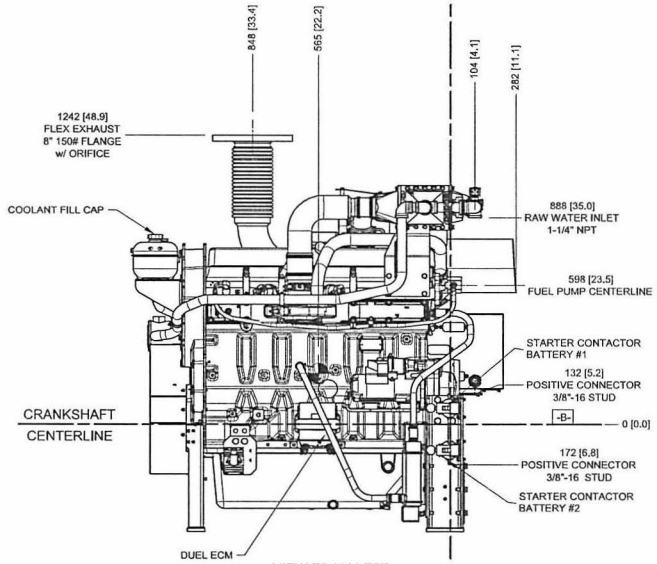

VIEW FROM LEFT SIDE OF ENGINE

DRAWING SUBJECT TO CHANGE WITHOUT NOTICE

DO NOT SCALE

REV	DESCRIPTION	ECN#	DWN	APVD	DATE
A	ISSUED ENGINEERING DRAWING	574	MAL	TTF	02SEP08
B	GENERAL CHANGES MADE TO DRAWING	574	MWL	TTF	27FEB09
C	FLYWHEEL HOUSING WAS INCORRECTLY LABELED AS SAE #2 (PAGE 2)	1858	MJD	MJD	04DEC09
D	TEMP CONTROL LAYOUT CHANGED	2260	JCA	TTF	09JUN11
E	REMOVED JX6H-UFADK0 AS NON-PLD	—	MLL	KRW	18JUL11
F	*FLYWHEEL DIM. REF. B.C. INSTEAD OF O.D.	—	DGP	KRW	02AUG11
G	RAW WATER OUTLET WAS 1-1/4" NPTF	2649	MOH	TTF	29OCT12

THE DRAWING AND THE INFORMATION HEREON ARE OUR PROPERTY AND MAY BE USED BY OTHERS ONLY AS AUTHORIZED BY US. UNPUBLISHED—ALL RIGHTS RESERVED UNDER THE COPYRIGHT LAWS.

MACHINE TOLERANCE

DECIMAL	mm	Inch
X.	± 1.5	
X.X	± 0.8	± 0.06
X.XX	± 0.3	± 0.03
X.XXX	± 0.025	± 0.01
X.XXXX		± 0.001

ANGULAR: ± 0.5°

FABRICATION TOLERANCE

DECIMAL	mm	Inch
X.	± 3	
X.X	± 1.5	± 0.12
X.XX		± 0.06

ANGULAR: ± 1.0°

YES / NO CONTROLLED DRAWING

CLARKE
Fire Protection Products, Inc.

DRAWN: MWLEMING
DATE: 8/1/2008
ENGR: KJKUNKLER
MATERIAL
ASSEMBLY

NAME: INSTALLATION DRAWING, FIRE PUMP ENGINE JX6H TIER 3 MODELS

PART NO.: D626 REV: G

SCALE: NTS UNITS: MM [INCH] PAGE 1 OF 2

Attachment 4
Revision 1
Page 6 of 6

1-FP-CP-001 & 2-FP-CP-001
Diesel Fire Water Pump
Power Blocks 1 & 2

FOR ENGINE SPECIFIC OPTIONS
SEE www.CLARKEFIRE.com

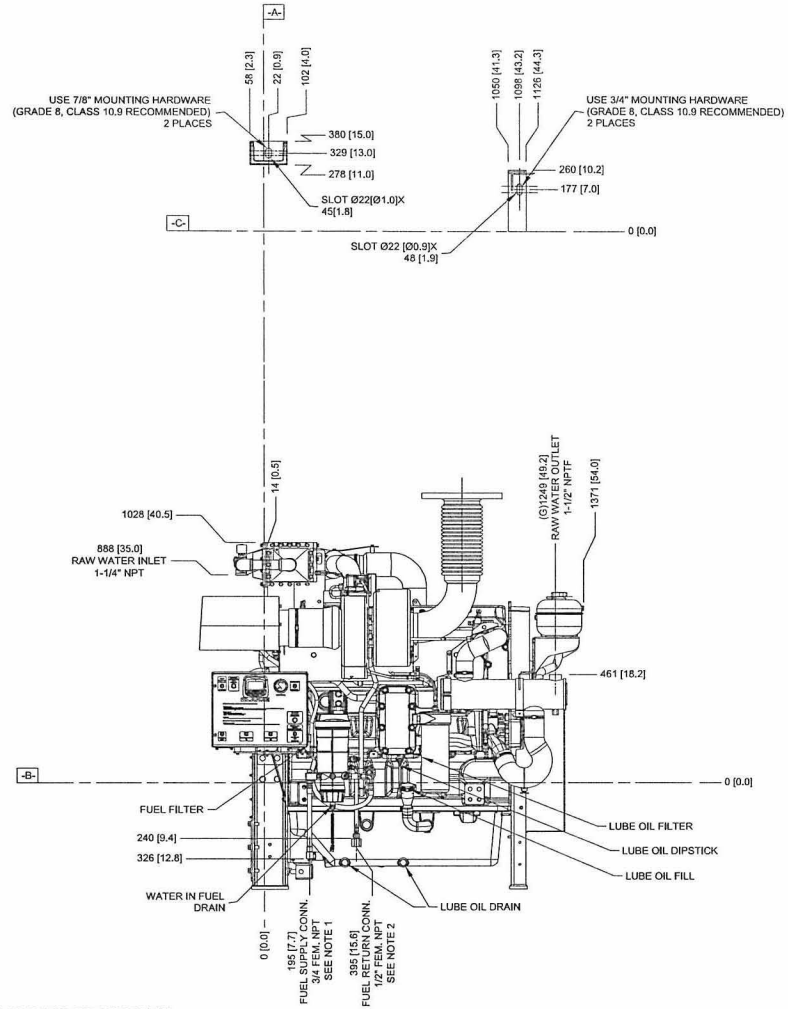

DETAIL DATUM -A-

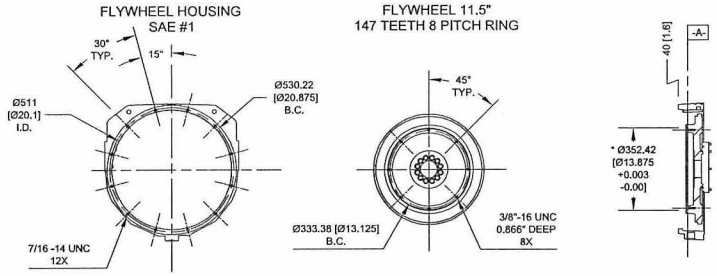

NOTES:
1. FUEL SUPPLY PIPING FROM TANK TO ENGINE SHOULD BE 3/4" MINIMUM PIPE DIAMETER.
2. FUEL RETURN PIPING FROM ENGINE TO TANK SHOULD BE 1/2" MINIMUM PIPE DIAMETER.

THIS DRAWING AND THE INFORMATION HEREON ARE OUR PROPERTY AND MAY BE USED BY OTHERS ONLY AS AUTHORIZED BY US. UNPUBLISHED—ALL RIGHTS RESERVED UNDER THE COPYRIGHT LAWS.

YES / NO CONTROLLED DRAWING

CLARKE
Fire Protection Products, Inc.

MACHINE TOLERANCE		
DECIMAL	mm	Inch
X	± 1.5	
X.X	± 0.4	± 0.06
X.XX	± 0.3	± 0.03
X.XXX	± 0.25	± 0.01
X.XXXX		± 0.001
ANGULAR: ± 0.5°		

FABRICATION TOLERANCE		
DECIMAL	mm	Inch
X	± 3	
X.X	± 1.5	± 0.12
X.XX		± 0.06
ANGULAR: ± 1.0°		

DRWN	MWLEMING
DATE	8/1/2008
ENGR	KJKUNKLER
MATERIAL	
ASSEMBLY	

NAME: INSTALLATION DRAWING, FIRE PUMP ENGINE JX6H TIER 3 MODELS

PART NO. D626 REV G

SCALE NTS | UNITS MM [INCH] | PAGE 2 OF 2

Attachment 4.1A-4

NTP Boiler Specifications

(see Attachment 4.1A-2)

Attachment 4.1A-5

Wet SAC Specifications

Attachment 4.1A-6

Diesel Fuel Analysis

Low Sulfur Diesel Fuel Characteristics

Property	Typical Value
Aromatics, V%	20.9
Aromatics, Wt%	21.4
Sulfur, ppm	11
PNA, Wt%	2.77
T10, deg C	199
T50, deg C	248
T90, deg C	317
Density, g/ml	0.8285
CA-Methane Min Limit %	88
CA-Ethane Max Limit %	6
CA-Propane Max Limit	3
HHV, btu/gallon	139,000
Ref: BP-ARCO	

Attachment 4.1A-7

Natural Gas Fuel Analysis

Typical Natural Gas Properties

Component Analysis		Chemical Analysis	
Component	Average Concentration, Volume	Constituent	Percent by Weight
C_2H_6	1.3%	H	24 %
C_3H_8	0.2%	N	1 %
Iso-C_4H_{10}	0.04%	O	2 %
n-C_4H_{10}	0.04%	S	0.75 gr/100 scf
iso-C_5H_{12}	0.01%	Higher Heating Value	1,020 Btu/scf
n-C_5H_{12}	0.01%		22,840 Btu/lb
C_6+	0.01%		
N_2	0.30%		
CO_2	0.99%		
S	<0.0001%		
Total	100%		

Attachment 4.1A-8

SCAQMD Vehicle Statistics Data

South Coast Air Basin

Surface Area = 6480 square miles

Parameter	1980	1985	1990	1995	2000	2005	2010	2015	2020
Population	10604663	11698030	13083594	13745292	14685008	15954332	16839106	17738828	18638550
Avg. Daily VMT/1000	161397	228818	282561	292884	323009	393767	377734	397696	414267

Table D-78

Los Angeles County

Surface Area = 2538 square miles

Parameter	1980	1985	1990	1995	2000	2005	2010	2015	2020
Population	7402796	8030358	8629028	8839010	9275290	9877053	10184503	10523307	10862110
Avg. Daily VMT/1000	112914	156791	182709	181641	193986	229225	211882	219707	225189

Table D-79 A portion of Los Angeles County lies within the Mojave Desert Air Basin.

Orange County

Surface Area = 789 square miles

Parameter	1980	1985	1990	1995	2000	2005	2010	2015	2020
Population	1944800	2166300	2411976	2604532	2863394	3056814	3227836	3374051	3520265
Avg. Daily VMT/1000	28849	43196	55940	60031	67138	78333	78937	82529	85272

Table D-80

Riverside County

Surface Area = 2024 square miles

Parameter	1980	1985	1990	1995	2000	2005	2010	2015	2020
Population	521774	651556	925658	1070642	1206858	1487982	1733251	1990947	2248643
Avg. Daily VMT/1000	8295	12324	21330	25384	32792	47891	49080	54224	58942

Table D-81 Portions of Riverside County lie within the Mojave Desert and Salton Sea Air Basins.

San Bernardino County

Surface Area = 1129 square miles

Parameter	1980	1985	1990	1995	2000	2005	2010	2015	2020
Population	735293	849816	1116932	1231108	1339466	1532483	1693516	1850524	2007532
Avg. Daily VMT/1000	11339	16507	22582	25828	29093	38318	37835	41236	44864

Table D-82 A portion of San Bernardino County lies within the Mojave Desert Air Basin.

2010 Estimated Annual Average Emissions

SOUTH COAST AIR BASIN

All emissions are represented in Tons per Day and reflect the most current data provided to ARB.

See detailed information.

Start a new query.

STATIONARY SOURCES	TOG	ROG	CO	NOX	SOX	PM	PM10	PM2.5
FUEL COMBUSTION	26.6	5.8	34.1	46.5	8.2	5.6	5.5	5.4
WASTE DISPOSAL	70.8	9.1	1.1	2.1	0.5	1.3	0.7	0.3
CLEANING AND SURFACE COATINGS	50.3	40.7	0.1	0.2	0.0	0.6	0.6	0.5
PETROLEUM PRODUCTION AND MARKETING	38.2	33.2	8.9	4.6	6.6	3.8	2.5	2.1
INDUSTRIAL PROCESSES	22.2	20.2	2.5	2.5	2.8	25.3	15.2	7.0
*** TOTAL STATIONARY SOURCES**	**208.1**	**109.0**	**46.8**	**55.9**	**18.1**	**36.6**	**24.5**	**15.4**
AREAWIDE SOURCES	**TOG**	**ROG**	**CO**	**NOX**	**SOX**	**PM**	**PM10**	**PM2.5**
SOLVENT EVAPORATION	148.2	129.4	-	-	-	0.0	0.0	0.0
MISCELLANEOUS PROCESSES	77.7	14.7	112.3	23.1	0.9	433.3	219.5	53.1
*** TOTAL AREAWIDE SOURCES**	**225.9**	**144.1**	**112.3**	**23.1**	**0.9**	**433.4**	**219.5**	**53.1**
MOBILE SOURCES	**TOG**	**ROG**	**CO**	**NOX**	**SOX**	**PM**	**PM10**	**PM2.5**
ON-ROAD MOTOR VEHICLES	201.1	182.8	1817.6	400.3	2.1	25.0	24.7	17.7
OTHER MOBILE SOURCES	153.2	140.1	973.2	262.9	18.0	18.5	17.8	15.7
*** TOTAL MOBILE SOURCES**	**354.4**	**322.9**	**2790.8**	**663.2**	**20.1**	**43.5**	**42.5**	**33.4**
NATURAL (NON-ANTHROPOGENIC) SOURCES	**TOG**	**ROG**	**CO**	**NOX**	**SOX**	**PM**	**PM10**	**PM2.5**
NATURAL SOURCES	100.6	86.5	164.2	5.0	1.5	17.3	16.6	14.1
*** TOTAL NATURAL (NON-ANTHROPOGENIC) SOURCES**	**100.6**	**86.5**	**164.2**	**5.0**	**1.5**	**17.3**	**16.6**	**14.1**
GRAND TOTAL FOR SOUTH COAST AIR BASIN	**889.0**	**662.5**	**3114.1**	**747.1**	**40.6**	**530.7**	**303.1**	**116.0**