GALATI | BLEK LLP

455 Capitol Mall Suite 350
Sacramento CA 95814
Tel· 916.441.6575
Fax· 916.441.6553

September 14, 2010

California Energy Commission
Dockets Unit
1516 Ninth Street
Sacramento, CA 95814-5512

Subject**: CAITHNESS BLYTHE II, LLC'S DATA RESPONSES SET 1**
BLYTHE ENERGY PROJECT PHASE II AMENDMENT
DOCKET NO. (02-AFC-1C)

Enclosed for filing with the California Energy Commission are 2 (two) hardcopies (one original and one copy), and 2 (two) compact discs of **CAITHNESS BLYTHE II, LLC'S DATA RESPONSES SET 1**, for the Blythe Energy Project Phase II Amendment (02-AFC-1C). The corresponding Appendix for Caithness Blythe II, LLC's Data Responses Set 1 has also been included.

Sincerely,

Marie Mills

BLYTHE ENERGY PROJECT PHASE II

AMENDMENT

(02-AFC-1C)

DATA RESPONSES SET 1

Submitted to

California Energy Commission

Submitted by

Caithness Blythe II, LLC

September 2010

Technical Area: Air Quality

DATA REQUEST

1. **Please provide the revised NO_2 modeling analysis for normal operation to demonstrate the compliance with the new, short-term EPA NO_2 standard.**

RESPONSE

In the February 9, 2010 Federal Register (75 FR 6474), USEPA promulgated a new primary NO_2 NAAQS of 100 ppb (about 188 µg/m^3), based on the 3-year average of the annual 98th percentile daily 1-hour maximum NO_2 concentrations. For modeling purposes, the 98th percentile daily maximum is the 8th highest daily maximum and, according the above PM-2.5 guidance memo, a 5-year average is used (rather than 3-years) when five years of meteorological data are modeled. Since AERMOD is NOT currently configured to calculate/present the average of the eighth highest daily 1-hour maximum concentrations (just the average of the annual eighth highest 24-hour impacts for PM-2.5), a post-processor was developed as suggested in the USEPA document *"Notice Regarding Modeling for New Hourly NO2 NAAQS"* updated 02/25/2010. For the modeling analysis, the Ozone Limiting Method (OLM) included within the AERMOD code was used to convert modeled NO_X concentrations to NO_2. Hourly ozone data from the nearby Blythe monitoring station was used by AERMOD in the OLM analysis, which was concurrent with the meteorological data modeled. As part of the OLM analysis, concurrent hourly background NO_2 concentrations were added to modeled NO_2-OLM impacts before determining the maximum 5-year average of the 8th highest (98th percentile) daily 1-hour maximum concentrations. This use of concurrent ozone and background NO2 concentrations in the OLM analysis is consistent with past guidance contained in the *"Guideline on Air Quality Models"* when OLM was discussed in any detail (i.e., 3rd Level Screening in Draft GAQM Revisions proposed November 1984 through GAQM Supplement B issued February 1995). Since NO_2 data are not measured at the Blythe monitoring station, the nearest representative NO_2 station used in the background monitoring determination in the application was used (i.e., Victorville). Results of the AERMOD OLM analysis with the post-processor to determine the maximum 5-year average of the 98th percentile (8th highest) daily maximum 1-hour NO_2 combined (modeled plus background) concentrations are shown below:

- Facility Normal Operations 179 µg/m^3
- Facility Startup/Shutdown Periods 138 µg/m^3
- Facility Commissioning Activities 143 µg/m^3

All of these impacts are less than the new 1-hour NO_2 NAAQS.

Technical Area: Transmission System and Engineering

DATA REQUEST

2. **Please provide a complete electrical one-line diagram of the BEP II 500kV integration switchyard showing the following:**
    a. **The MVA and voltage rating of each new generator**
    b. **All major equipment for generators' interconnection to the switchyard including:**
        - **any buses**
        - **bus duct connectors and/or cables,**
        - **breakers & disconnect switches on the 16 kV low side,**
        - **generator step-up (GSU) transformers (MVA & kV),**
        - **short overhead conductors or cables,**
        - **arrangements of buses, breakers, and disconnect switches on the 500 kV side and their respective sizes and/or ratings in amperes.**
    c. **The termination facilities for the transmission outlets.**

RESPONSE

Please see the attached Data Response Set 1 Appendix. Attachment 1 in the Data Response Set 1 Appendix is Figure 6-1, an electrical one-line diagram of the BEP II 500kV integration switchyard.

DATA REQUEST

3. **Please provide a complete physical layout drawing of the proposed switchyard showing major equipment and transmission line outlets.**

RESPONSE

Please see the attached Data Response Set 1 Appendix. Attachment 2 in the Data Response Set 1 Appendix is Figure 6-2, a complete physical layout of the proposed switchyard.

DATA REQUEST

4. **Please provide a letter from the California ISO stating that the inclusion of the Keim 500 kV substation as an interconnection facility is adequate and permissible.**

RESPONSE

Caithness Blythe II, LLC (Caithness) has attached as Attachment 3 in the Data Response Set 1 Appendix, the Large Generator Interconnection Agreement (LGIA) for the Blythe Energy Project Phase II (BEP II, Project) between Caithness, Southern California Edison, and the California Independent System Operator. Additionally, the Facility Study performed by Southern California Edison is included as Attachment 4 in the Data Response Set 1 Appendix.

DATA REQUEST

5. **Please provide a complete electrical one-line diagram of the proposed new Keim 500 kV substation showing arrangements of buses, breakers, disconnect switches and their respective sizes and/or ratings in amperes along with the termination facilities of the proposed transmission outlets.**

RESPONSE

Please see the attached Data Response Set 1 Appendix. Attachment 5 in the Data Response Set 1 Appendix is Figure 6-3, an electrical one-line diagram of the permitted Keim 500 kV substation.

DATA REQUEST

6. **Please provide a complete physical layout drawing of the proposed Keim substation showing major equipment and transmission line outlets.**

RESPONSE

Please see the attached Data Response Set 1 Appendix. Attachment 6 in the Data Response Set 1 Appendix is Figure 6-4, a complete physical layout drawing of the permitted Keim substation.

DATA REQUEST

7. **Please provide an electrical one-line diagram of the proposed new Colorado River 500 kV substation showing general arrangements of its buses, breakers, disconnect switches with specifics of the termination facilities of the proposed BEP II 500 kV generator tie line and their respective sizes and/or ratings in amperes.**

RESPONSE

Please see the attached Data Response Set 1 Appendix. Attachment 7 in the Data Response Set 1 Appendix is Figure 6-5, an electrical one-line diagram of the permitted Colorado River substation.

DATA REQUEST

8. **For the new 500 kV overhead generator tie lines between the proposed BEP II integration switchyard and Keim 500 kV substation, and from the Keim Substation to the CRS, please provide length of the line and their conductor sizes, types, and ampere ratings.**

RESPONSE

The table below provides a summary of transmission line design parameters the proposed 500-kV transmission line facilities from the permitted switchyard at the BEP II to the permitted Keim Switchyard. Also included is the double circuit 500-kV transmission line between Keim Switchyard and the Colorado River Substation.

ITEM	DESCRIPTION	COMMENTS
Line Length – BEP II Switchyard to Kiem	2,100 feet	Single Circuit Tubular Steel Poles
Line Length – Kiem to CRS	8 miles	Double Circuit Tubular Steel Poles
Conductor Size	2-2156 84/19 kcmil "Bluebird" ACSR	Two conductor bundle
Conductor Ampere Rating	1623 Amperes per Sub-Conductor	40°C Rise above 40°C Ambient
Bundle Spacing	22 inches	
Bundle Orientation	Horizontal	
Single Circuit Arrangement	Triangular	Two phases on one side and one on the opposite side
Double Circuit Arrangement	Vertical	One circuit on each side
Phase spacing	30ft	Tangent Pole
Circuit spacing	35ft	Double Circuit tangent Pole

DATA REQUEST

9. **Please provide design diagrams for transmission steel lattice towers for the intermediate and dead-end structures showing the heights of the structure above and below ground, configuration of insulators and conductors (including ground conductors) with their respective position measurements on the structure.**

RESPONSE

Please see the attached Data Response Set 1 Appendix. Attachment 6 in the Data Response Set 1 Appendix is Figure 6-6, design diagrams for transmission steel lattice towers from the permitted Keim substation to Colorado River substation. While the steel lattice towers in Figure 6-6 range in height from 120 to 195 feet, the steel lattice towers associated with the BEP II will each total 120 feet in height.

DATA REQUEST

10. **Please provide the Feasibility Study Report for BEP II 570 MW net generation performed by SCE and California ISO with a mitigation plan for any identified reliability criteria violations.**

RESPONSE

Caithness has included as Attachment 3 in the Data Response Set 1 Appendix, the LGIA for the BEP II between Caithness, Southern California Edison, and the California Independent System Operator. Additionally, the Facility Study performed by Southern California Edison is included as Attachment 4 and the System Impact Study is included as Attachment 9 in the Data Response Set 1 Appendix.

DATA REQUEST

11. **Please provide a letter from the California ISO stating that the Feasibility Study for interconnection of the BEP II 570 MW generation to the California ISO grid waives any requirements for further SIS and/or FS and is still valid for the deferred BEP II on-line date from 2011-2013.**

RESPONSE

Appendix A to the LGIA discusses the BEP II Amendment interconnecting into the CAISO grid at a gross output of 570 MWs. The California Independent System Operator and Southern California Edison will only enter into an LGIA with a provider once necessary evaluations have been completed on the system impact and the facility. Please accept the LGIA as confirmation from the CAISO and Southern California Edison that the project has been thoroughly evaluated and is currently approved for interconnection into the Keim Substation.

DATA REQUEST

12. **Provide description of the 500 kV generator tie line routes along with physical layout drawings showing distinctly the routes of the proposed 500 kV overhead interconnection lines from the BEP II 500 kV switchyard to the proposed Keim 500 kV substation and then to the new SCE Colorado River 500 kV substation, including Right-of-Way (ROW) widths.**

RESPONSE

According to section 3.7.1.3 of the Desert Southwest Transmission Project (DSWTP) Final Environmental Impact Statement / Environmental Impact Report (EIS/EIR) the entire project would take place within a Bureau of Land Management (BLM) Designated Utility Corridor. In addition the entire length of the route is approximately 118 miles with a right-of-way width of generally 300 feet.

DATA REQUEST

13. Please describe whether the ROW would be through private or public lands.

RESPONSE

Please also refer to Data Response 12. While the DSWTP is located entirely within Riverside County, section 3.7.1.3 of the DSWTP Final EIS/EIR states the transmission route will be "located entirely within BLM's Designated Utility Corridor". The existing BLM Designated Utility Corridor is shown in Figure ES-2 of the DSWTP Final EIS/EIR.

DATA REQUEST

14. **Provide the final DSWTP EIR/EIS report for staff's review of the environmental impacts of the switchyard and interconnection facilities and their mitigation.**

RESPONSE

The Desert Southwest Transmission Project (DSWTP) Final EIR/EIS report including appendices and figures is provided on a CD and submitted with these data requests.

The documents provided on the CD may also be found at http://www.blm.gov/ca/st/en/fo/palmsprings/desert_southwest_transmissing.html.

// Original Signed //

David Wiseman
Counsel to Caithness Blythe II, LLC

BLYTHE ENERGY PROJECT PHASE II AMENDMENT

DATA RESPONSE SET 1

APPENDIX

ATTACHMENT 1

FIGURE 6-1

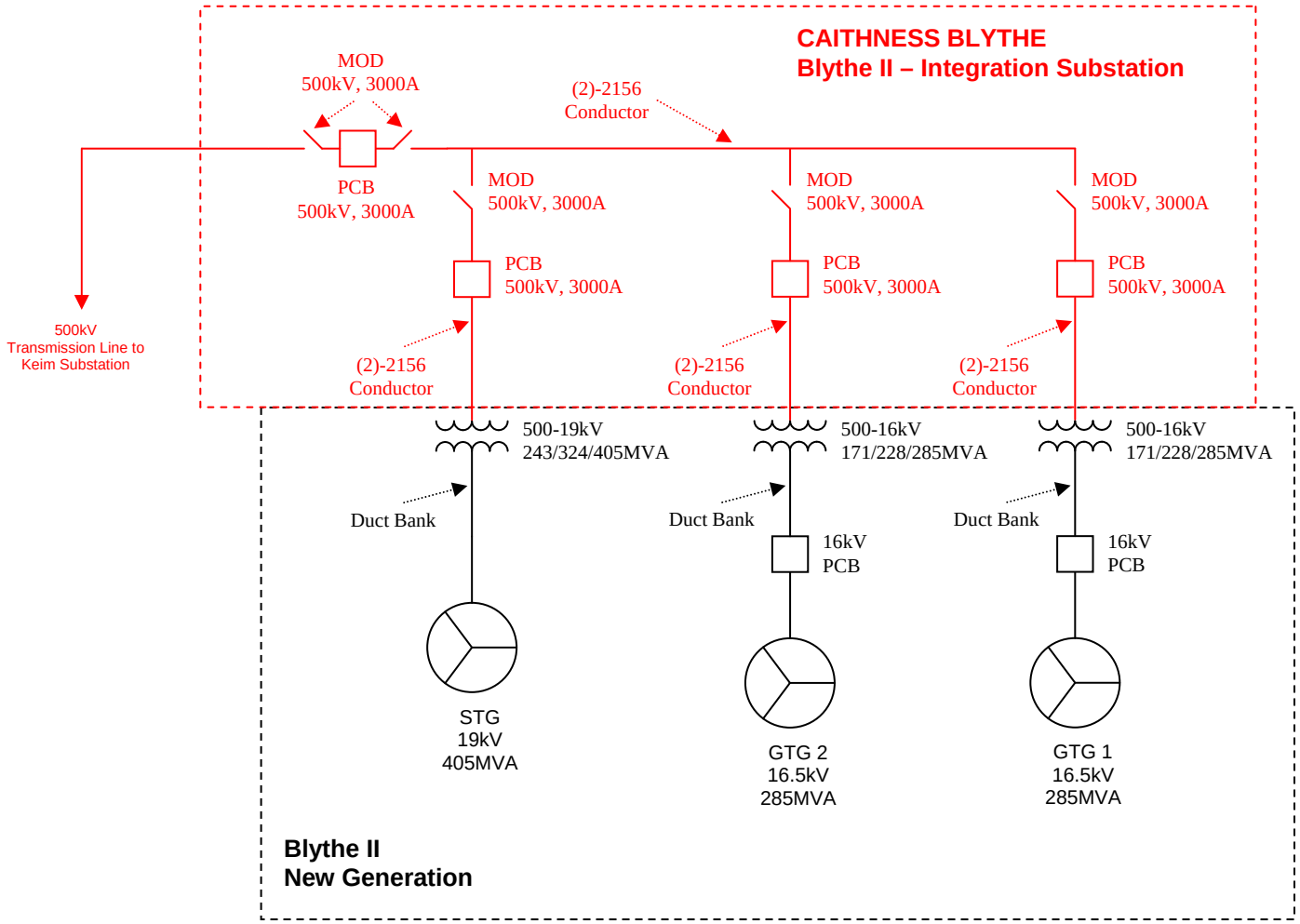

Figure 6-1

	DATE: 08/18/10 REV: A	**BLYTHE II** **Integration Substation** **ONE-LINE**	DWG NO **001**

ATTACHMENT 2

FIGURE 6-2

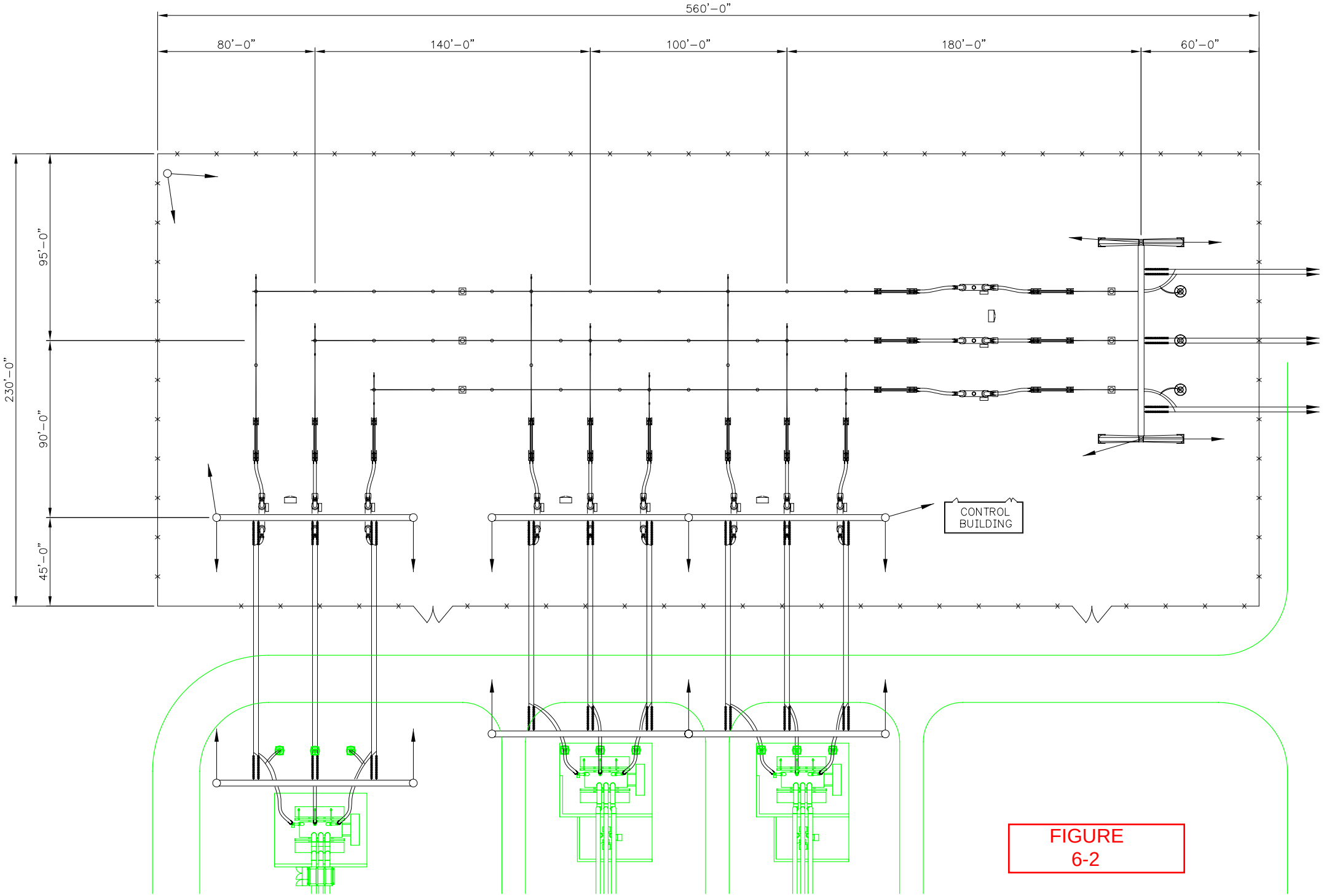
560'-0"
80'-0"
140'-0"
100'-0"
180'-0"
60'-0"
230'-0"
95'-0"
90'-0"
45'-0"
CONTROL BUILDING

FIGURE 6-2

ATTACHMENT 3

LARGE GENERATOR INTERCONNECTION AGREEMENT

STANDARD LARGE GENERATOR INTERCONNECTION AGREEMENT (LGIA)
AMONG

CAITHNESS BLYTHE II, LLC
AND

SOUTHERN CALIFORNIA EDISON COMPANY
AND

CALIFORNIA INDEPENDENT SYSTEM OPERATOR CORPORATION

TABLE OF CONTENTS

ARTICLE 1. DEFINITIONS 9

ARTICLE 2. EFFECTIVE DATE, TERM AND TERMINATION 17
2.1 Effective Date 17
2.2 Term of Agreement 17
2.3 Termination Procedures 17
2.3.1 Written Notice 17
2.3.2 Default 17
2.3.3 Suspension of Work 17
2.3.4 17
2.4 Termination Costs 17
2.4.1 17
2.4.2 18
2.4.3 18
2.5 Disconnection 18
2.6 Survival 18

ARTICLE 3. REGULATORY FILINGS AND CAISO TARIFF COMPLIANCE 19
3.1 Filing 19
3.2 Agreement Subject to CAISO Tariff 19
3.3 Relationship Between this LGIA and the CAISO Tariff 19
3.4 Relationship Between this LGIA and the QF PGA 19

ARTICLE 4. SCOPE OF SERVICE 19
4.1 Interconnection Service 19
4.2 Provision of Service 20
4.3 Performance Standards 20
4.4 No Transmission Service 20
4.5 Interconnection Customer Provided Services 20

ARTICLE 5. INTERCONNECTION FACILITIES ENGINEERING, PROCUREMENT, AND CONSTRUCTION 20
5.1 Options 20
5.1.1 Standard Option 20
5.1.2 Alternate Option 21
5.1.3 Option to Build 21
5.1.4 Negotiated Option 22
5.2 General Conditions Applicable to Option to Build 22
5.3 Liquidated Damages 24
5.4 Power System Stabilizers 25
5.5 Equipment Procurement 25
5.5.1 25
5.5.2 26

5.5.3 ... 26
5.6 Construction Commencement ... 26
5.6.1 ... 26
5.6.2 ... 26
5.6.3 ... 26
5.6.4 ... 26
5.7 Work Progress ... 26
5.8 Information Exchange ... 26
5.9 Limited Operation ... 26
5.10 Interconnection Customer's Interconnection Facilities ... 27
5.10.1 Large Generating Facility and Interconnection Customer's Interconnection Facilities Specifications ... 27
5.10.2 Participating TO's and CAISO's Review ... 27
5.10.3 Interconnection Customer's Interconnection Facilities Construction ... 27
5.10.4 Interconnection Customer to Meet Requirements of the Participating TO's Interconnection Handbook ... 28
5.11 Participating TO's Interconnection Facilities Construction ... 28
5.12 Access Rights ... 29
5.13 Lands of Other Property Owners ... 29
5.14 Permits ... 29
5.15 Early Construction of Base Case Facilities ... 29
5.16 Suspension ... 30
5.17 Taxes ... 30
5.17.1 Interconnection Customer Payments Not Taxable ... 30
5.17.2 Representations and Covenants ... 30
5.17.3 Indemnification for the Cost Consequences of Current Tax Liability Imposed Upon the Participating TO ... 31
5.17.4 Tax Gross-Up Amount ... 32
5.17.5 Private Letter Ruling or Change or Clarification of Law ... 33
5.17.6 Subsequent Taxable Events ... 33
5.17.7 Contests ... 33
5.17.8 Refund ... 34
5.17.9 Taxes Other Than Income Taxes ... 36
5.18 Tax Status ... 36
5.19 Modification ... 36
5.19.1 General ... 36
5.19.2 Standards ... 37
5.19.3 Modification Costs ... 37

ARTICLE 6. TESTING AND INSPECTION ... 37
6.1 Pre-Commercial Operation Date Testing and Modifications ... 37
6.2 Post-Commercial Operation Date Testing and Modifications ... 38
6.3 Right to Observe Testing ... 38
6.4 Right to Inspect ... 38

ARTICLE 7. METERING 38
7.1 General 38
7.2 Check Meters 39
7.3 Participating TO Retail Metering 39

ARTICLE 8. COMMUNICATIONS 39
8.1 Interconnection Customer Obligations 39
8.2 Remote Terminal Unit 39
8.3 No Annexation 40

ARTICLE 9. OPERATIONS 40
9.1 General 40
9.2 Balancing Authority Area Notification 40
9.3 CAISO and Participating TO Obligations 40
9.4 Interconnection Customer Obligations 41
9.5 Start-Up and Synchronization 41
9.6 Reactive Power 41
9.6.1 Power Factor Design Criteria 41
9.6.2 Voltage Schedules 41
9.6.2.1 Governors and Regulators 42
9.6.3 Payment for Reactive Power 43
9.7 Outages and Interruptions 43
9.7.1 Outages 43
9.7.1.1 Outage Authority and Coordination 43
9.7.1.2 Outage Schedules 43
9.7.1.3 Outage Restoration 44
9.7.2 Interruption of Service 44
9.7.2.1 44
9.7.2.2 44
9.7.2.3 44
9.7.2.4 45
9.7.2.5 45
9.7.3 Under-Frequency and Over-Frequency Conditions 45
9.7.4 System Protection and Other Control Requirements 45
9.7.4.1 System Protection Facilities 45
9.7.4.2 46
9.7.4.3 46
9.7.4.4 46
9.7.4.5 46
9.7.4.6 46
9.7.5 Requirements for Protection 46
9.7.6 Power Quality 47
9.8 Switching and Tagging Rules 47
9.9 Use of Interconnection Facilities by Third Parties 47
9.9.1 Purpose of Interconnection Facilities 47
9.9.2 Third Party Users 47

9.10 Disturbance Analysis Data Exchange 48

ARTICLE 10. MAINTENANCE 48
10.1 Participating TO Obligations 48
10.2 Interconnection Customer Obligations 48
10.3 Coordination 48
10.4 Secondary Systems 48
10.5 Operating and Maintenance Expenses 49

ARTICLE 11. PERFORMANCE OBLIGATION 49
11.1 Interconnection Customer's Interconnection Facilities 49
11.2 Participating TO's Interconnection Facilities 49
11.3 Network Upgrades and Distribution Upgrades 49
11.4 Transmission Credits 49
11.4.1 Repayment of Amounts Advanced for Network Upgrades 49
11.4.2 Special Provisions for Affected Systems 50
11.4.3 50
11.5 Provision of Security 51
11.5.1 51
11.5.2 51
11.5.3 51
11.6 Interconnection Customer Compensation 51
11.6.1 Interconnection Customer Compensation for Actions During Emergency Condition 51

ARTICLE 12. INVOICE 52
12.1 General 52
12.2 Final Invoice 52
12.3 Payment 52
12.4 Disputes 53

ARTICLE 13. EMERGENCIES 53
13.1 [Reserved] 53
13.2 Obligations 53
13.3 Notice 53
13.4 Immediate Action 53
13.5 CAISO and Participating TO Authority 54
13.5.1 General 54
13.5.2 Reduction and Disconnection 54
13.6 Interconnection Customer Authority 55
13.7 Limited Liability 55

ARTICLE 14. REGULATORY REQUIREMENTS AND GOVERNING LAWS 55
14.1 Regulatory Requirements 55
14.2 Governing Law 56
14.2.1 56

14.2.2 56
14.2.3 56

ARTICLE 15. NOTICES 56
15.1 General 56
15.2 Billings and Payments 56
15.3 Alternative Forms of Notice 56
15.4 Operations and Maintenance Notice 56

ARTICLE 16. FORCE MAJEURE 57
16.1 Force Majeure 57
16.1.1 57
16.1.2 57

ARTICLE 17. DEFAULT 57
17.1 Default 57
17.1.1 General 57
17.1.2 Right to Terminate 57

ARTICLE 18. INDEMNITY, CONSEQUENTIAL DAMAGES, AND INSURANCE 58
18.1 Indemnity 58
18.1.1 Indemnified Party 58
18.1.2 Indemnifying Party 58
18.1.3 Indemnity Procedures 58
18.2 Consequential Damages 59
18.3 Insurance 59
18.3.1 59
18.3.2 59
18.3.3 60
18.3.4 60
18.3.5 60
18.3.6 60
18.3.7 60
18.3.8 61
18.3.9 61
18.3.10 61
18.3.11 61

ARTICLE 19. ASSIGNMENT 61
19.1 Assignment 61

ARTICLE 20. SEVERABILITY 62
20.1 Severability 62

ARTICLE 21. COMPARABILITY 62
21.1 Comparability 62

ARTICLE 22. CONFIDENTIALITY 62
22.1 Confidentiality 62
22.1.1 Term 63
22.1.2 Scope 63
22.1.3 Release of Confidential Information 63
22.1.4 Rights 64
22.1.5 No Warranties 64
22.1.6 Standard of Care 64
22.1.7 Order of Disclosure 64
22.1.8 Termination of Agreement 64
22.1.9 Remedies 64
22.1.10 Disclosure to FERC, its Staff, or a State 65
22.1.11 65

ARTICLE 23. ENVIRONMENTAL RELEASES 66
23.1 66

ARTICLE 24. INFORMATION REQUIREMENTS 66
24.1 Information Acquisition 66
24.2 Information Submission by Participating TO 66
24.3 Updated Information Submission by Interconnection Customer 66
24.4 Information Supplementation 67

ARTICLE 25. INFORMATION ACCESS AND AUDIT RIGHTS 68
25.1 Information Access 68
25.2 Reporting of Non-Force Majeure Events 68
25.3 Audit Rights 68
25.3.1 68
25.3.2 69
25.4 Audit Rights Periods 69
25.4.1 Audit Rights Period for Construction-Related Accounts and Records 69
25.4.2 Audit Rights Period for All Other Accounts and Records 69
25.5 Audit Results 69
25.5.1 70

ARTICLE 26. SUBCONTRACTORS 70
26.1 General 70
26.2 Responsibility of Principal 70
26.3 No Limitation by Insurance 70

ARTICLE 27. DISPUTES 70
27.1 Submission 70
27.2 External Arbitration Procedures 71

27.3 Arbitration Decisions 71
27.4 Costs 71

ARTICLE 28. REPRESENTATIONS, WARRANTIES AND COVENANTS 72
28.1 General 72
28.1.1 Good Standing 72
28.1.2 Authority 72
28.1.3 No Conflict 72
28.1.4 Consent and Approval 72

ARTICLE 29. [RESERVED] 72

ARTICLE 30. MISCELLANEOUS 73
30.1 Binding Effect 73
30.2 Conflicts 73
30.3 Rules of Interpretation 73
30.4 Entire Agreement 73
30.5 No Third Party Beneficiaries 74
30.6 Waiver 74
30.7 Headings 74
30.8 Multiple Counterparts 74
30.9 Amendment 74
30.10 Modification by the Parties 74
30.11 Reservation of Rights 74
30.12 No Partnership 75
30.13 Joint and Several Obligations 76

Appendices 77
Appendix A Interconnection Facilities, Network Upgrades and Distribution Upgrades

Appendix B Milestones

Appendix C Interconnection Details

Appendix D Security Arrangements Details

Appendix E Commercial Operation Date

Appendix F Addresses for Delivery of Notices and Billings

Appendix G Reliability Management System Agreement

Appendix H Interconnection Requirements for a Wind Generating Plant

STANDARD LARGE GENERATOR INTERCONNECTION AGREEMENT

CAITHNESS BLYTHE II, LLC

SOUTHERN CALIFORNIA EDISON COMPANY

CALIFORNIA INDEPENDENT SYSTEM OPERATOR CORPORATION

THIS STANDARD LARGE GENERATOR INTERCONNECTION AGREEMENT ("LGIA") is made and entered into this _____ day of _____ 20__, by and among Caithness Blythe II, LLC, a wholly-owned subsidiary of Caithness Energy, LLC, a limited liability company organized and existing under the laws of the State of Delaware ("**Interconnection Customer**" with a Large Generating Facility), Southern California Edison Company, a corporation organized and existing under the laws of the State of California ("**Participating TO**"), and California Independent System Operator Corporation, a California nonprofit public benefit corporation organized and existing under the laws of the State of California ("**CAISO**"). Interconnection Customer, Participating TO, and CAISO each may be referred to as a "Party" or collectively as the "Parties."

RECITALS

WHEREAS, CAISO exercises Operational Control over the CAISO Controlled Grid; and

WHEREAS, the Participating TO owns, operates, and maintains the Participating TO's Transmission System; and

WHEREAS, Interconnection Customer intends to own, lease and/or control and operate the Generating Facility identified as a Large Generating Facility in Appendix C to this LGIA; and

WHEREAS, Interconnection Customer, Participating TO, and CAISO have agreed to enter into this LGIA for the purpose of interconnecting the Large Generating Facility with the Participating TO's Transmission System;

NOW, THEREFORE, in consideration of and subject to the mutual covenants contained herein, it is agreed:

When used in this LGIA, terms with initial capitalization that are not defined in Article 1 shall have the meanings specified in the Article in which they are used.

ARTICLE 1. DEFINITIONS

Adverse System Impact shall mean the negative effects due to technical or operational limits on conductors or equipment being exceeded that may compromise the safety and reliability of the electric system.

Affected System shall mean an electric system other than the CAISO Controlled Grid that may be affected by the proposed interconnection, including the Participating TO's electric system that is not part of the CAISO Controlled Grid.

Affiliate shall mean, with respect to a corporation, partnership or other entity, each such other corporation, partnership or other entity that directly or indirectly, through one or more intermediaries, controls, is controlled by, or is under common control with, such corporation, partnership or other entity.

Applicable Laws and Regulations shall mean all duly promulgated applicable federal, state and local laws, regulations, rules, ordinances, codes, decrees, judgments, directives, or judicial or administrative orders, permits and other duly authorized actions of any Governmental Authority.

Applicable Reliability Council shall mean the Western Electricity Coordinating Council or its successor.

Applicable Reliability Standards shall mean the requirements and guidelines of NERC, the Applicable Reliability Council, and the Balancing Authority Area of the Participating TO's Transmission System to which the Generating Facility is directly connected, including requirements adopted pursuant to Section 215 of the Federal Power Act.

Balancing Authority shall mean the responsible entity that integrates resource plans ahead of time, maintains load-interchange-generation balance within a Balancing Authority Area, and supports Interconnection frequency in real time.

Balancing Authority Area shall mean the collection of generation, transmission, and loads within the metered boundaries of the Balancing Authority. The Balancing Authority maintains load-resource balance within this area.

Base Case shall mean the base case power flow, short circuit, and stability data bases used for the Interconnection Studies.

Breach shall mean the failure of a Party to perform or observe any material term or condition of this LGIA.

Breaching Party shall mean a Party that is in Breach of this LGIA.

Business Day shall mean Monday through Friday, excluding federal holidays and the day after Thanksgiving Day.

Calendar Day shall mean any day including Saturday, Sunday or a federal holiday.

Commercial Operation shall mean the status of an Electric Generating Unit at a Generating Facility that has commenced generating electricity for sale, excluding electricity generated during Trial Operation.

Commercial Operation Date of an Electric Generating Unit shall mean the date on which the Electric Generating Unit at the Generating Facility commences Commercial Operation as agreed to by the applicable Participating TO and the Interconnection Customer pursuant to Appendix E to this LGIA.

Confidential Information shall mean any confidential, proprietary or trade secret information of a plan, specification, pattern, procedure, design, device, list, concept, policy or compilation relating to the present or planned business of a Party, which is designated as confidential by the Party supplying the information, whether conveyed orally, electronically, in writing, through inspection, or otherwise, subject to Article 22.1.2.

Default shall mean the failure of a Breaching Party to cure its Breach in accordance with Article 17 of this LGIA.

Distribution System shall mean those non-CAISO-controlled transmission and distribution facilities owned by the Participating TO.

Distribution Upgrades shall mean the additions, modifications, and upgrades to the Participating TO's Distribution System. Distribution Upgrades do not include Interconnection Facilities.

Effective Date shall mean the date on which this LGIA becomes effective upon execution by the Parties subject to acceptance by FERC, or if filed unexecuted, upon the date specified by FERC.

Electric Generating Unit shall mean an individual electric generator and its associated plant and apparatus whose electrical output is capable of being separately identified and metered.

Emergency Condition shall mean a condition or situation: (1) that in the judgment of the Party making the claim is imminently likely to endanger life or property; or (2) that, in the case of the CAISO, is imminently likely (as determined in a non-discriminatory manner) to cause a material adverse effect on the security of, or damage to, the CAISO Controlled Grid or the electric systems of others to which the CAISO Controlled Grid is directly connected; (3) that, in the case of the Participating TO, is

imminently likely (as determined in a non-discriminatory manner) to cause a material adverse effect on the security of, or damage to, the Participating TO's Transmission System, Participating TO's Interconnection Facilities, Distribution System, or the electric systems of others to which the Participating TO's electric system is directly connected; or (4) that, in the case of the Interconnection Customer, is imminently likely (as determined in a non-discriminatory manner) to cause a material adverse effect on the security of, or damage to, the Generating Facility or Interconnection Customer's Interconnection Facilities. System restoration and black start shall be considered Emergency Conditions; provided, that Interconnection Customer is not obligated by this LGIA to possess black start capability.

Environmental Law shall mean Applicable Laws or Regulations relating to pollution or protection of the environment or natural resources.

Federal Power Act shall mean the Federal Power Act, as amended, 16 U.S.C. §§ 791a *et seq*.

FERC shall mean the Federal Energy Regulatory Commission or its successor.

Force Majeure shall mean any act of God, labor disturbance, act of the public enemy, war, insurrection, riot, fire, storm or flood, explosion, breakage or accident to machinery or equipment, any order, regulation or restriction imposed by governmental, military or lawfully established civilian authorities, or any other cause beyond a Party's control. A Force Majeure event does not include acts of negligence or intentional wrongdoing by the Party claiming Force Majeure.

Generating Facility shall mean the Interconnection Customer's Electric Generating Unit(s) used for the production of electricity identified in the Interconnection Customer's Interconnection Request, but shall not include the Interconnection Customer's Interconnection Facilities.

Generating Facility Capacity shall mean the net capacity of the Generating Facility and the aggregate net capacity of the Generating Facility where it includes multiple energy production devices.

Good Utility Practice shall mean any of the practices, methods and acts engaged in or approved by a significant portion of the electric utility industry during the relevant time period, or any of the practices, methods and acts which, in the exercise of reasonable judgment in light of the facts known at the time the decision was made, could have been expected to accomplish the desired result at a reasonable cost consistent with good business practices, reliability, safety and expedition. Good Utility Practice is not intended to be any one of a number of the optimum practices, methods, or acts to the exclusion of all others, but rather to be acceptable practices, methods, or acts generally accepted in the region.

Governmental Authority shall mean any federal, state, local or other governmental, regulatory or administrative agency, court, commission, department, board, or other governmental subdivision, legislature, rulemaking board, tribunal, or other governmental authority having jurisdiction over the Parties, their respective facilities, or the respective services they provide, and exercising or entitled to exercise any administrative, executive, police, or taxing authority or power; provided, however, that such term does not include the Interconnection Customer, CAISO, Participating TO, or any Affiliate thereof.

Hazardous Substances shall mean any chemicals, materials or substances defined as or included in the definition of “hazardous substances,” “hazardous wastes,” “hazardous materials,” “hazardous constituents,” “restricted hazardous materials,” “extremely hazardous substances,” “toxic substances,” “radioactive substances,” “contaminants,” “pollutants,” “toxic pollutants” or words of similar meaning and regulatory effect under any applicable Environmental Law, or any other chemical, material or substance, exposure to which is prohibited, limited or regulated by any applicable Environmental Law.

Initial Synchronization Date shall mean the date upon which an Electric Generating Unit is initially synchronized and upon which Trial Operation begins.

In-Service Date shall mean the date upon which the Interconnection Customer reasonably expects it will be ready to begin use of the Participating TO’s Interconnection Facilities to obtain back feed power.

Interconnection Customer's Interconnection Facilities shall mean all facilities and equipment, as identified in Appendix A of this LGIA, that are located between the Generating Facility and the Point of Change of Ownership, including any modification, addition, or upgrades to such facilities and equipment necessary to physically and electrically interconnect the Generating Facility to the Participating TO’s Transmission System. Interconnection Customer's Interconnection Facilities are sole use facilities.

Interconnection Facilities shall mean the Participating TO’s Interconnection Facilities and the Interconnection Customer's Interconnection Facilities. Collectively, Interconnection Facilities include all facilities and equipment between the Generating Facility and the Point of Interconnection, including any modification, additions or upgrades that are necessary to physically and electrically interconnect the Generating Facility to the Participating TO’s Transmission System. Interconnection Facilities are sole use facilities and shall not include Distribution Upgrades, Stand Alone Network Upgrades or Network Upgrades.

Interconnection Facilities Study shall mean the study conducted or caused to be performed by the CAISO, in coordination with the applicable Participating TO(s), or a third party consultant for the Interconnection Customer to determine a list of facilities (including the Participating TO’s Interconnection Facilities, Network Upgrades, and

Distribution Upgrades), the cost of those facilities, and the time required to interconnect the Generating Facility with the Participating TO's Transmission System.

Interconnection Facilities Study Agreement shall mean the agreement between the Interconnection Customer and the CAISO for conducting the Interconnection Facilities Study.

Interconnection Feasibility Study shall mean the preliminary evaluation conducted or caused to be performed by the CAISO, in coordination with the applicable Participating TO(s), or a third party consultant for the Interconnection Customer of the system impact and cost of interconnecting the Generating Facility to the Participating TO's Transmission System.

Interconnection Handbook shall mean a handbook, developed by the Participating TO and posted on the Participating TO's web site or otherwise made available by the Participating TO, describing technical and operational requirements for wholesale generators and loads connected to the Participating TO's portion of the CAISO Controlled Grid, as such handbook may be modified or superseded from time to time. Participating TO's standards contained in the Interconnection Handbook shall be deemed consistent with Good Utility Practice and Applicable Reliability Standards. In the event of a conflict between the terms of this LGIA and the terms of the Participating TO's Interconnection Handbook, the terms in this LGIA shall apply.

Interconnection Request shall mean a request, in the form of Appendix 1 to the Standard Large Generator Interconnection Procedures, in accordance with the CAISO Tariff.

Interconnection Service shall mean the service provided by the Participating TO and CAISO associated with interconnecting the Interconnection Customer's Generating Facility to the Participating TO's Transmission System and enabling the CAISO Controlled Grid to receive electric energy and capacity from the Generating Facility at the Point of Interconnection, pursuant to the terms of this LGIA, the Participating TO's Transmission Owner Tariff, and the CAISO Tariff.

Interconnection Study shall mean any of the following studies: the Interconnection Feasibility Study, the Interconnection System Impact Study, and the Interconnection Facilities Study conducted or caused to be performed by the CAISO, in coordination with the applicable Participating TO(s), or a third party consultant for the Interconnection Customer pursuant to the Standard Large Generator Interconnection Procedures.

Interconnection System Impact Study shall mean the engineering study conducted or caused to be performed by the CAISO, in coordination with the applicable Participating TO(s), or a third party consultant for the Interconnection Customer that evaluates the impact of the proposed interconnection on the safety and reliability of the Participating TO's Transmission System and, if applicable, an Affected System. The

study shall identify and detail the system impacts that would result if the Generating Facility were interconnected without project modifications or system modifications, focusing on the Adverse System Impacts identified in the Interconnection Feasibility Study, or to study potential impacts, including but not limited to those identified in the Scoping Meeting as described in the Standard Large Generator Interconnection Procedures.

IRS shall mean the Internal Revenue Service.

CAISO Controlled Grid shall mean the system of transmission lines and associated facilities of the parties to the Transmission Control Agreement that have been placed under the CAISO's Operational Control.

CAISO Tariff shall mean the CAISO's tariff, as filed with FERC, and as amended or supplemented from time to time, or any successor tariff.

Large Generating Facility shall mean a Generating Facility having a Generating Facility Capacity of more than 20 MW.

Loss shall mean any and all damages, losses, and claims, including claims and actions relating to injury to or death of any person or damage to property, demand, suits, recoveries, costs and expenses, court costs, attorney fees, and all other obligations by or to third parties.

Material Modification shall mean those modifications that have a material impact on the cost or timing of any Interconnection Request or any other valid interconnection request with a later queue priority date.

Metering Equipment shall mean all metering equipment installed or to be installed for measuring the output of the Generating Facility pursuant to this LGIA at the metering points, including but not limited to instrument transformers, MWh-meters, data acquisition equipment, transducers, remote terminal unit, communications equipment, phone lines, and fiber optics.

NERC shall mean the North American Electric Reliability Council or its successor organization.

Network Upgrades shall be Participating TO's Delivery Network Upgrades and Participating TO's Reliability Network Upgrades.

Operational Control shall mean the rights of the CAISO under the Transmission Control Agreement and the CAISO Tariff to direct the parties to the Transmission Control Agreement how to operate their transmission lines and facilities and other electric plant affecting the reliability of those lines and facilities for the purpose of affording comparable non-discriminatory transmission access and meeting applicable reliability criteria.

Participating TO's Delivery Network Upgrades shall mean the additions, modifications, and upgrades to the Participating TO's Transmission System at or beyond the Point of Interconnection, other than Reliability Network Upgrades, identified in the Interconnection Studies, as identified in Appendix A, to relieve constraints on the CAISO Controlled Grid.

Participating TO's Interconnection Facilities shall mean all facilities and equipment owned, controlled or operated by the Participating TO from the Point of Change of Ownership to the Point of Interconnection as identified in Appendix A to this LGIA, including any modifications, additions or upgrades to such facilities and equipment. Participating TO's Interconnection Facilities are sole use facilities and shall not include Distribution Upgrades, Stand Alone Network Upgrades or Network Upgrades.

Participating TO's Reliability Network Upgrades shall mean the additions, modifications, and upgrades to the Participating TO's Transmission System at or beyond the Point of Interconnection, identified in the Interconnection Studies, as identified in Appendix A, necessary to interconnect the Large Generating Facility safely and reliably to the Participating TO's Transmission System, which would not have been necessary but for the interconnection of the Large Generating Facility, including additions, modifications, and upgrades necessary to remedy short circuit or stability problems resulting from the interconnection of the Large Generating Facility to the Participating TO's Transmission System. Participating TO's Reliability Network Upgrades also include, consistent with Applicable Reliability Council practice, the Participating TO's facilities necessary to mitigate any adverse impact the Large Generating Facility's interconnection may have on a path's Applicable Reliability Council rating.

Participating TO's Transmission System shall mean the facilities owned and operated by the Participating TO and that have been placed under the CAISO's Operational Control, which facilities form part of the CAISO Controlled Grid.

Party or Parties shall mean the Participating TO, CAISO, Interconnection Customer or the applicable combination of the above.

Point of Change of Ownership shall mean the point, as set forth in Appendix A to this LGIA, where the Interconnection Customer's Interconnection Facilities connect to the Participating TO's Interconnection Facilities.

Point of Interconnection shall mean the point, as set forth in Appendix A to this LGIA, where the Interconnection Facilities connect to the Participating TO's Transmission System.

Qualifying Facility shall mean a qualifying cogeneration facility or qualifying small power production facility, as defined in the Code of Federal Regulations, Title 18, Part 292 (18 C.F.R. §292).

QF PGA shall mean a Qualifying Facility Participating Generator Agreement specifying the special provisions for the operating relationship between a Qualifying Facility and the CAISO, a pro forma version of which is set forth in Appendix B.3 of the CAISO Tariff.

Reasonable Efforts shall mean, with respect to an action required to be attempted or taken by a Party under this LGIA, efforts that are timely and consistent with Good Utility Practice and are otherwise substantially equivalent to those a Party would use to protect its own interests.

Scoping Meeting shall mean the meeting among representatives of the Interconnection Customer, the Participating TO(s), other Affected Systems, and the CAISO conducted for the purpose of discussing alternative interconnection options, to exchange information including any transmission data and earlier study evaluations that would be reasonably expected to impact such interconnection options, to analyze such information, and to determine the potential feasible Points of Interconnection.

Stand Alone Network Upgrades shall mean Network Upgrades that the Interconnection Customer may construct without affecting day-to-day operations of the CAISO Controlled Grid or Affected Systems during their construction. The Participating TO, the CAISO, and the Interconnection Customer must agree as to what constitutes Stand Alone Network Upgrades and identify them in Appendix A to this LGIA.

Standard Large Generator Interconnection Procedures (LGIP) shall mean the CAISO protocol that sets forth the interconnection procedures applicable to an Interconnection Request pertaining to a Large Generating Facility that is included in CAISO Tariff Appendix U.

System Protection Facilities shall mean the equipment, including necessary protection signal communications equipment, that protects (1) the Participating TO's Transmission System, Participating TO's Interconnection Facilities, CAISO Controlled Grid, and Affected Systems from faults or other electrical disturbances occurring at the Generating Facility and (2) the Generating Facility from faults or other electrical system disturbances occurring on the CAISO Controlled Grid, Participating TO's Interconnection Facilities, and Affected Systems or on other delivery systems or other generating systems to which the CAISO Controlled Grid is directly connected.

Transmission Control Agreement shall mean CAISO FERC Electric Tariff No. 7.

Trial Operation shall mean the period during which the Interconnection Customer is engaged in on-site test operations and commissioning of an Electric Generating Unit prior to Commercial Operation.

ARTICLE 2. EFFECTIVE DATE, TERM AND TERMINATION

2.1 Effective Date. This LGIA shall become effective upon execution by the Parties subject to acceptance by FERC (if applicable), or if filed unexecuted, upon the date specified by FERC. The CAISO and Participating TO shall promptly file this LGIA with FERC upon execution in accordance with Article 3.1, if required.

2.2 Term of Agreement. Subject to the provisions of Article 2.3, this LGIA shall remain in effect for a period of fifty (50) years from the Effective Date and shall be automatically renewed for each successive one-year period thereafter.

2.3 Termination Procedures.

2.3.1 Written Notice. This LGIA may be terminated by the Interconnection Customer after giving the CAISO and the Participating TO ninety (90) Calendar Days advance written notice, or by the CAISO and the Participating TO notifying FERC after the Generating Facility permanently ceases Commercial Operation.

2.3.2 Default. A Party may terminate this LGIA in accordance with Article 17.

2.3.3 Suspension of Work. This LGIA may be deemed terminated in accordance with Article 5.16.

2.3.4 Notwithstanding Articles 2.3.1, 2.3.2, and 2.3.3, no termination shall become effective until the Parties have complied with all Applicable Laws and Regulations applicable to such termination, including the filing with FERC of a notice of termination of this LGIA, which notice has been accepted for filing by FERC.

2.4 Termination Costs. If this LGIA terminates pursuant to Article 2.3 above, the Interconnection Customer shall pay all costs incurred or irrevocably committed to be incurred in association with the Interconnection Customer's interconnection (including any cancellation costs relating to orders or contracts for Interconnection Facilities and equipment) and other expenses, including any Network Upgrades and Distribution Upgrades for which the Participating TO or CAISO has incurred expenses or has irrevocably committed to incur expenses and has not been reimbursed by the Interconnection Customer, as of the date of the other Parties' receipt of the notice of termination, subject to the limitations set forth in this Article 2.4. Nothing in this Article 2.4 shall limit the Parties' rights under Article 17.

2.4.1 Notwithstanding the foregoing, in the event of termination by a Party, all Parties shall use commercially Reasonable Efforts to mitigate the costs,

damages and charges arising as a consequence of termination. With respect to any portion of the Participating TO's Interconnection Facilities that have not yet been constructed or installed, the Participating TO shall to the extent possible and with the Interconnection Customer's authorization cancel any pending orders of, or return, any materials or equipment for, or contracts for construction of, such facilities; provided that in the event the Interconnection Customer elects not to authorize such cancellation, the Interconnection Customer shall assume all payment obligations with respect to such materials, equipment, and contracts, and the Participating TO shall deliver such material and equipment, and, if necessary, assign such contracts, to the Interconnection Customer as soon as practicable, at the Interconnection Customer's expense. To the extent that the Interconnection Customer has already paid the Participating TO for any or all such costs of materials or equipment not taken by the Interconnection Customer, the Participating TO shall promptly refund such amounts to the Interconnection Customer, less any costs, including penalties, incurred by the Participating TO to cancel any pending orders of or return such materials, equipment, or contracts.

2.4.2 The Participating TO may, at its option, retain any portion of such materials, equipment, or facilities that the Interconnection Customer chooses not to accept delivery of, in which case the Participating TO shall be responsible for all costs associated with procuring such materials, equipment, or facilities.

2.4.3 With respect to any portion of the Interconnection Facilities, and any other facilities already installed or constructed pursuant to the terms of this LGIA, Interconnection Customer shall be responsible for all costs associated with the removal, relocation or other disposition or retirement of such materials, equipment, or facilities.

2.5 **Disconnection**. Upon termination of this LGIA, the Parties will take all appropriate steps to disconnect the Large Generating Facility from the Participating TO's Transmission System. All costs required to effectuate such disconnection shall be borne by the terminating Party, unless such termination resulted from the non-terminating Party's Default of this LGIA or such non-terminating Party otherwise is responsible for these costs under this LGIA.

2.6 **Survival**. This LGIA shall continue in effect after termination to the extent necessary to provide for final billings and payments and for costs incurred hereunder, including billings and payments pursuant to this LGIA; to permit the determination and enforcement of liability and indemnification obligations arising from acts or events that occurred while this LGIA was in effect; and to permit each Party to have access to the lands of the other Parties pursuant to this LGIA or other applicable agreements, to disconnect, remove or salvage its own facilities and equipment.

ARTICLE 3. REGULATORY FILINGS AND CAISO TARIFF COMPLIANCE

3.1 Filing. The Participating TO and the CAISO shall file this LGIA (and any amendment hereto) with the appropriate Governmental Authority(ies), if required. The Interconnection Customer may request that any information so provided be subject to the confidentiality provisions of Article 22. If the Interconnection Customer has executed this LGIA, or any amendment thereto, the Interconnection Customer shall reasonably cooperate with the Participating TO and CAISO with respect to such filing and to provide any information reasonably requested by the Participating TO or CAISO needed to comply with applicable regulatory requirements.

3.2 Agreement Subject to CAISO Tariff. The Interconnection Customer will comply with all applicable provisions of the CAISO Tariff, including the LGIP.

3.3 Relationship Between this LGIA and the CAISO Tariff. With regard to rights and obligations between the Participating TO and the Interconnection Customer, if and to the extent a matter is specifically addressed by a provision of this LGIA (including any appendices, schedules or other attachments to this LGIA), the provisions of this LGIA shall govern. If and to the extent a provision of this LGIA is inconsistent with the CAISO Tariff and dictates rights and obligations between the CAISO and the Participating TO or the CAISO and the Interconnection Customer, the CAISO Tariff shall govern.

3.4 Relationship Between this LGIA and the QF PGA. With regard to the rights and obligations of a Qualifying Facility that has entered into a QF PGA with the CAISO and has entered into this LGIA, if and to the extent a matter is specifically addressed by a provision of the QF PGA that is inconsistent with this LGIA, the terms of the QF PGA shall govern.

ARTICLE 4. SCOPE OF SERVICE

4.1 Interconnection Service. Interconnection Service allows the Interconnection Customer to connect the Large Generating Facility to the Participating TO's Transmission System and be eligible to deliver the Large Generating Facility's output using the available capacity of the CAISO Controlled Grid. To the extent the Interconnection Customer wants to receive Interconnection Service, the Participating TO shall construct facilities identified in Appendices A and C that the Participating TO is responsible to construct.

Interconnection Service does not necessarily provide the Interconnection Customer with the capability to physically deliver the output of its Large Generating Facility to any particular load on the CAISO Controlled Grid without

incurring congestion costs. In the event of transmission constraints on the CAISO Controlled Grid, the Interconnection Customer's Large Generating Facility shall be subject to the applicable congestion management procedures in the CAISO Tariff in the same manner as all other resources.

4.2 **Provision of Service**. The Participating TO and the CAISO shall provide Interconnection Service for the Large Generating Facility.

4.3 **Performance Standards**. Each Party shall perform all of its obligations under this LGIA in accordance with Applicable Laws and Regulations, Applicable Reliability Standards, and Good Utility Practice, and to the extent a Party is required or prevented or limited in taking any action by such regulations and standards, such Party shall not be deemed to be in Breach of this LGIA for its compliance therewith. If such Party is the CAISO or Participating TO, then that Party shall amend the LGIA and submit the amendment to FERC for approval.

4.4 **No Transmission Service**. The execution of this LGIA does not constitute a request for, nor the provision of, any transmission service under the CAISO Tariff, and does not convey any right to deliver electricity to any specific customer or point of delivery.

4.5 **Interconnection Customer Provided Services**. The services provided by Interconnection Customer under this LGIA are set forth in Article 9.6 and Article 13.5.1. Interconnection Customer shall be paid for such services in accordance with Article 11.6.

ARTICLE 5. INTERCONNECTION FACILITIES ENGINEERING, PROCUREMENT, AND CONSTRUCTION

Interconnection Facilities, Network Upgrades, and Distribution Upgrades shall be studied, designed, and constructed pursuant to Good Utility Practice. Such studies, design and construction shall be based on the assumed accuracy and completeness of all technical information received by the Participating TO and the CAISO from the Interconnection Customer associated with interconnecting the Large Generating Facility.

5.1 **Options**. Unless otherwise mutually agreed among the Parties, the Interconnection Customer shall select the In-Service Date, Initial Synchronization Date, and Commercial Operation Date; and either Standard Option or Alternate Option set forth below for completion of the Participating TO's Interconnection Facilities and Network Upgrades as set forth in Appendix A, Interconnection Facilities, Network Upgrades, and Distribution Upgrades, and such dates and selected option shall be set forth in Appendix B, Milestones.

5.1.1 Standard Option. The Participating TO shall design, procure, and construct the Participating TO's Interconnection Facilities, Network Upgrades, and Distribution Upgrades, using Reasonable Efforts to complete the Participating TO's Interconnection Facilities, Network Upgrades, and Distribution Upgrades by the dates set forth in Appendix B, Milestones. The Participating TO shall not be required to undertake any action which is inconsistent with its standard safety practices, its material and equipment specifications, its design criteria and construction procedures, its labor agreements, and Applicable Laws and Regulations. In the event the Participating TO reasonably expects that it will not be able to complete the Participating TO's Interconnection Facilities, Network Upgrades, and Distribution Upgrades by the specified dates, the Participating TO shall promptly provide written notice to the Interconnection Customer and the CAISO and shall undertake Reasonable Efforts to meet the earliest dates thereafter.

5.1.2 Alternate Option. If the dates designated by the Interconnection Customer are acceptable to the Participating TO, the Participating TO shall so notify the Interconnection Customer within thirty (30) Calendar Days, and shall assume responsibility for the design, procurement and construction of the Participating TO's Interconnection Facilities by the designated dates.

If the Participating TO subsequently fails to complete the Participating TO's Interconnection Facilities by the In-Service Date, to the extent necessary to provide back feed power; or fails to complete Network Upgrades by the Initial Synchronization Date to the extent necessary to allow for Trial Operation at full power output, unless other arrangements are made by the Parties for such Trial Operation; or fails to complete the Network Upgrades by the Commercial Operation Date, as such dates are reflected in Appendix B, Milestones; the Participating TO shall pay the Interconnection Customer liquidated damages in accordance with Article 5.3, Liquidated Damages, provided, however, the dates designated by the Interconnection Customer shall be extended day for day for each day that the CAISO refuses to grant clearances to install equipment.

5.1.3 Option to Build. If the dates designated by the Interconnection Customer are not acceptable to the Participating TO, the Participating TO shall so notify the Interconnection Customer within thirty (30) Calendar Days, and unless the Parties agree otherwise, the Interconnection Customer shall have the option to assume responsibility for the design, procurement and construction of the Participating TO's Interconnection Facilities and Stand Alone Network Upgrades. If the Interconnection Customer elects to exercise its option to assume responsibility for the design, procurement and construction of the Participating TO’s Interconnection Facilities and Stand Alone Network Upgrades, it shall so notify the Participating TO

within thirty (30) Calendar Days of receipt of the Participating TO's notification that the designated dates are not acceptable to the Participating TO. The Participating TO, CAISO, and Interconnection Customer must agree as to what constitutes Stand Alone Network Upgrades and identify such Stand Alone Network Upgrades in Appendix A to this LGIA. Except for Stand Alone Network Upgrades, the Interconnection Customer shall have no right to construct Network Upgrades under this option.

5.1.4 Negotiated Option. If the Interconnection Customer elects not to exercise its option under Article 5.1.3, Option to Build, the Interconnection Customer shall so notify the Participating TO within thirty (30) Calendar Days of receipt of the Participating TO's notification that the designated dates are not acceptable to the Participating TO, and the Parties shall in good faith attempt to negotiate terms and conditions (including revision of the specified dates and liquidated damages, the provision of incentives or the procurement and construction of a portion of the Participating TO's Interconnection Facilities and Stand Alone Network Upgrades by the Interconnection Customer) pursuant to which the Participating TO is responsible for the design, procurement and construction of the Participating TO's Interconnection Facilities and Network Upgrades. If the Parties are unable to reach agreement on such terms and conditions, the Participating TO shall assume responsibility for the design, procurement and construction of the Participating TO's Interconnection Facilities and Network Upgrades pursuant to Article 5.1.1, Standard Option.

5.2 General Conditions Applicable to Option to Build. If the Interconnection Customer assumes responsibility for the design, procurement and construction of the Participating TO's Interconnection Facilities and Stand Alone Network Upgrades,

(1) the Interconnection Customer shall engineer, procure equipment, and construct the Participating TO's Interconnection Facilities and Stand Alone Network Upgrades (or portions thereof) using Good Utility Practice and using standards and specifications provided in advance by the Participating TO;

(2) the Interconnection Customer's engineering, procurement and construction of the Participating TO's Interconnection Facilities and Stand Alone Network Upgrades shall comply with all requirements of law to which the Participating TO would be subject in the engineering, procurement or construction of the Participating TO's Interconnection Facilities and Stand Alone Network Upgrades;

(3) the Participating TO shall review, and the Interconnection Customer shall obtain the Participating TO's approval of, the engineering design,

equipment acceptance tests, and the construction of the Participating TO's Interconnection Facilities and Stand Alone Network Upgrades, which approval shall not be unreasonably withheld, and the CAISO may, at its option, review the engineering design, equipment acceptance tests, and the construction of the Participating TO's Interconnection Facilities and Stand Alone Network Upgrades;

(4) prior to commencement of construction, the Interconnection Customer shall provide to the Participating TO, with a copy to the CAISO for informational purposes, a schedule for construction of the Participating TO's Interconnection Facilities and Stand Alone Network Upgrades, and shall promptly respond to requests for information from the Participating TO;

(5) at any time during construction, the Participating TO shall have the right to gain unrestricted access to the Participating TO's Interconnection Facilities and Stand Alone Network Upgrades and to conduct inspections of the same;

(6) at any time during construction, should any phase of the engineering, equipment procurement, or construction of the Participating TO's Interconnection Facilities and Stand Alone Network Upgrades not meet the standards and specifications provided by the Participating TO, the Interconnection Customer shall be obligated to remedy deficiencies in that portion of the Participating TO's Interconnection Facilities and Stand Alone Network Upgrades;

(7) the Interconnection Customer shall indemnify the CAISO and Participating TO for claims arising from the Interconnection Customer's construction of the Participating TO's Interconnection Facilities and Stand Alone Network Upgrades under the terms and procedures applicable to Article 18.1 Indemnity;

(8) the Interconnection Customer shall transfer control of the Participating TO's Interconnection Facilities to the Participating TO and shall transfer Operational Control of Stand Alone Network Upgrades to the CAISO;

(9) unless the Parties otherwise agree, the Interconnection Customer shall transfer ownership of the Participating TO's Interconnection Facilities and Stand Alone Network Upgrades to the Participating TO. As soon as reasonably practicable, but within twelve months after completion of the construction of the Participating TO’s Interconnection Facilities and Stand Alone Network Upgrades, the Interconnection Customer shall provide an invoice of the final cost of the construction of the Participating TO’s Interconnection Facilities and Stand Alone Network Upgrades to the Participating TO, which invoice shall set forth such costs in sufficient detail

to enable the Participating TO to reflect the proper costs of such facilities in its transmission rate base and to identify the investment upon which refunds will be provided;

(10) the Participating TO shall accept for operation and maintenance the Participating TO's Interconnection Facilities and Stand Alone Network Upgrades to the extent engineered, procured, and constructed in accordance with this Article 5.2; and

(11) the Interconnection Customer's engineering, procurement and construction of the Participating TO's Interconnection Facilities and Stand Alone Network Upgrades shall comply with all requirements of the "Option to Build" conditions set forth in Appendix C. Interconnection Customer shall deliver to the Participating TO "as-built" drawings, information, and any other documents that are reasonably required by the Participating TO to assure that the Interconnection Facilities and Stand-Alone Network Upgrades are built to the standards and specifications required by the Participating TO.

5.3 Liquidated Damages. The actual damages to the Interconnection Customer, in the event the Participating TO's Interconnection Facilities or Network Upgrades are not completed by the dates designated by the Interconnection Customer and accepted by the Participating TO pursuant to subparagraphs 5.1.2 or 5.1.4, above, may include Interconnection Customer's fixed operation and maintenance costs and lost opportunity costs. Such actual damages are uncertain and impossible to determine at this time. Because of such uncertainty, any liquidated damages paid by the Participating TO to the Interconnection Customer in the event that the Participating TO does not complete any portion of the Participating TO's Interconnection Facilities or Network Upgrades by the applicable dates, shall be an amount equal to ½ of 1 percent per day of the actual cost of the Participating TO's Interconnection Facilities and Network Upgrades, in the aggregate, for which the Participating TO has assumed responsibility to design, procure and construct.

However, in no event shall the total liquidated damages exceed 20 percent of the actual cost of the Participating TO's Interconnection Facilities and Network Upgrades for which the Participating TO has assumed responsibility to design, procure, and construct. The foregoing payments will be made by the Participating TO to the Interconnection Customer as just compensation for the damages caused to the Interconnection Customer, which actual damages are uncertain and impossible to determine at this time, and as reasonable liquidated damages, but not as a penalty or a method to secure performance of this LGIA. Liquidated damages, when the Parties agree to them, are the exclusive remedy for the Participating TO's failure to meet its schedule.

No liquidated damages shall be paid to the Interconnection Customer if: (1) the Interconnection Customer is not ready to commence use of the Participating TO's Interconnection Facilities or Network Upgrades to take the delivery of power for the Electric Generating Unit's Trial Operation or to export power from the Electric Generating Unit on the specified dates, unless the Interconnection Customer would have been able to commence use of the Participating TO's Interconnection Facilities or Network Upgrades to take the delivery of power for Electric Generating Unit's Trial Operation or to export power from the Electric Generating Unit, but for the Participating TO's delay; (2) the Participating TO's failure to meet the specified dates is the result of the action or inaction of the Interconnection Customer or any other interconnection customer who has entered into an interconnection agreement with the CAISO and/or Participating TO, action or inaction by the CAISO, or any cause beyond the Participating TO's reasonable control or reasonable ability to cure; (3) the Interconnection Customer has assumed responsibility for the design, procurement and construction of the Participating TO's Interconnection Facilities and Stand Alone Network Upgrades; or (4) the Parties have otherwise agreed.

In no event shall the CAISO have any responsibility or liability to the Interconnection Customer for liquidated damages pursuant to the provisions of this Article 5.3.

5.4 Power System Stabilizers. The Interconnection Customer shall procure, install, maintain and operate Power System Stabilizers in accordance with the guidelines and procedures established by the Applicable Reliability Council and in accordance with the provisions of Section 4.6.5.1 of the CAISO Tariff. The CAISO reserves the right to establish reasonable minimum acceptable settings for any installed Power System Stabilizers, subject to the design and operating limitations of the Large Generating Facility. If the Large Generating Facility's Power System Stabilizers are removed from service or not capable of automatic operation, the Interconnection Customer shall immediately notify the CAISO and the Participating TO and restore the Power System Stabilizers to operation as soon as possible and in accordance with the Reliability Management System Agreement in Appendix G. The CAISO shall have the right to order the reduction in output or disconnection of the Large Generating Facility if the reliability of the CAISO Controlled Grid would be adversely affected as a result of improperly tuned Power System Stabilizers. The requirements of this Article 5.4 shall not apply to wind generators of the induction type.

5.5 Equipment Procurement. If responsibility for construction of the Participating TO's Interconnection Facilities or Network Upgrades is to be borne by the Participating TO, then the Participating TO shall commence design of the Participating TO's Interconnection Facilities or Network Upgrades and procure necessary equipment as soon as practicable after all of the following conditions are satisfied, unless the Parties otherwise agree in writing:

5.5.1 The CAISO, in coordination with the applicable Participating TO(s), has completed the Interconnection Facilities Study pursuant to the Interconnection Facilities Study Agreement;

5.5.2 The Participating TO has received written authorization to proceed with design and procurement from the Interconnection Customer by the date specified in Appendix B, Milestones; and

5.5.3 The Interconnection Customer has provided security to the Participating TO in accordance with Article 11.5 by the dates specified in Appendix B, Milestones.

5.6 **Construction Commencement**. The Participating TO shall commence construction of the Participating TO's Interconnection Facilities and Network Upgrades for which it is responsible as soon as practicable after the following additional conditions are satisfied:

5.6.1 Approval of the appropriate Governmental Authority has been obtained for any facilities requiring regulatory approval;

5.6.2 Necessary real property rights and rights-of-way have been obtained, to the extent required for the construction of a discrete aspect of the Participating TO's Interconnection Facilities and Network Upgrades;

5.6.3 The Participating TO has received written authorization to proceed with construction from the Interconnection Customer by the date specified in Appendix B, Milestones; and

5.6.4 The Interconnection Customer has provided payment and security to the Participating TO in accordance with Article 11.5 by the dates specified in Appendix B, Milestones.

5.7 **Work Progress**. The Parties will keep each other advised periodically as to the progress of their respective design, procurement and construction efforts. Any Party may, at any time, request a progress report from another Party. If, at any time, the Interconnection Customer determines that the completion of the Participating TO's Interconnection Facilities will not be required until after the specified In-Service Date, the Interconnection Customer will provide written notice to the Participating TO and CAISO of such later date upon which the completion of the Participating TO's Interconnection Facilities will be required.

5.8 **Information Exchange**. As soon as reasonably practicable after the Effective Date, the Parties shall exchange information regarding the design and compatibility of the Interconnection Customer’s Interconnection Facilities and Participating TO’s Interconnection Facilities and compatibility of the

Interconnection Facilities with the Participating TO's Transmission System, and shall work diligently and in good faith to make any necessary design changes.

5.9 Limited Operation. If any of the Participating TO's Interconnection Facilities or Network Upgrades are not reasonably expected to be completed prior to the Commercial Operation Date of the Electric Generating Unit, the Participating TO and/or CAISO, as applicable, shall, upon the request and at the expense of the Interconnection Customer, perform operating studies on a timely basis to determine the extent to which the Electric Generating Unit and the Interconnection Customer's Interconnection Facilities may operate prior to the completion of the Participating TO's Interconnection Facilities or Network Upgrades consistent with Applicable Laws and Regulations, Applicable Reliability Standards, Good Utility Practice, and this LGIA. The Participating TO and CAISO shall permit Interconnection Customer to operate the Electric Generating Unit and the Interconnection Customer's Interconnection Facilities in accordance with the results of such studies.

5.10 Interconnection Customer's Interconnection Facilities. The Interconnection Customer shall, at its expense, design, procure, construct, own and install the Interconnection Customer's Interconnection Facilities, as set forth in Appendix A.

5.10.1 Large Generating Facility and Interconnection Customer's Interconnection Facilities Specifications. The Interconnection Customer shall submit initial specifications for the Interconnection Customer's Interconnection Facilities and Large Generating Facility, including System Protection Facilities, to the Participating TO and the CAISO at least one hundred eighty (180) Calendar Days prior to the Initial Synchronization Date; and final specifications for review and comment at least ninety (90) Calendar Days prior to the Initial Synchronization Date. The Participating TO and the CAISO shall review such specifications pursuant to this LGIA and the LGIP to ensure that the Interconnection Customer's Interconnection Facilities and Large Generating Facility are compatible with the technical specifications, operational control, safety requirements, and any other applicable requirements of the Participating TO and the CAISO and comment on such specifications within thirty (30) Calendar Days of the Interconnection Customer's submission. All specifications provided hereunder shall be deemed confidential.

5.10.2 Participating TO's and CAISO's Review. The Participating TO's and the CAISO's review of the Interconnection Customer's final specifications shall not be construed as confirming, endorsing, or providing a warranty as to the design, fitness, safety, durability or reliability of the Large Generating Facility, or the Interconnection Customer's Interconnection Facilities. Interconnection Customer shall make such changes to the Interconnection Customer's Interconnection Facilities as may reasonably be required by the Participating TO or the CAISO, in accordance with Good Utility

Practice, to ensure that the Interconnection Customer's Interconnection Facilities are compatible with the technical specifications, Operational Control, and safety requirements of the Participating TO or the CAISO.

5.10.3 Interconnection Customer's Interconnection Facilities Construction. The Interconnection Customer's Interconnection Facilities shall be designed and constructed in accordance with Good Utility Practice. Within one hundred twenty (120) Calendar Days after the Commercial Operation Date, unless the Participating TO and Interconnection Customer agree on another mutually acceptable deadline, the Interconnection Customer shall deliver to the Participating TO and CAISO "as-built" drawings, information and documents for the Interconnection Customer's Interconnection Facilities and the Electric Generating Unit(s), such as: a one-line diagram, a site plan showing the Large Generating Facility and the Interconnection Customer's Interconnection Facilities, plan and elevation drawings showing the layout of the Interconnection Customer's Interconnection Facilities, a relay functional diagram, relaying AC and DC schematic wiring diagrams and relay settings for all facilities associated with the Interconnection Customer's step-up transformers, the facilities connecting the Large Generating Facility to the step-up transformers and the Interconnection Customer's Interconnection Facilities, and the impedances (determined by factory tests) for the associated step-up transformers and the Electric Generating Units. The Interconnection Customer shall provide the Participating TO and the CAISO specifications for the excitation system, automatic voltage regulator, Large Generating Facility control and protection settings, transformer tap settings, and communications, if applicable. Any deviations from the relay settings, machine specifications, and other specifications originally submitted by the Interconnection Customer shall be assessed by the Participating TO and the CAISO pursuant to the appropriate provisions of this LGIA and the LGIP.

5.10.4 Interconnection Customer to Meet Requirements of the Participating TO's Interconnection Handbook. The Interconnection Customer shall comply with the Participating TO's Interconnection Handbook.

5.11 Participating TO's Interconnection Facilities Construction. The Participating TO's Interconnection Facilities shall be designed and constructed in accordance with Good Utility Practice. Upon request, within one hundred twenty (120) Calendar Days after the Commercial Operation Date, unless the Participating TO and Interconnection Customer agree on another mutually acceptable deadline, the Participating TO shall deliver to the Interconnection Customer and the CAISO the following "as-built" drawings, information and documents for the Participating TO's Interconnection Facilities. No as-built drawings will be provided.

The Participating TO will obtain control for operating and maintenance purposes of the Participating TO's Interconnection Facilities and Stand Alone Network Upgrades upon completion of such facilities. Pursuant to Article 5.2, the CAISO will obtain Operational Control of the Stand Alone Network Upgrades prior to the Commercial Operation Date.

5.12 Access Rights. Upon reasonable notice and supervision by a Party, and subject to any required or necessary regulatory approvals, a Party ("Granting Party") shall furnish at no cost to the other Party ("Access Party") any rights of use, licenses, rights of way and easements with respect to lands owned or controlled by the Granting Party, its agents (if allowed under the applicable agency agreement), or any Affiliate, that are necessary to enable the Access Party to obtain ingress and egress to construct, operate, maintain, repair, test (or witness testing), inspect, replace or remove facilities and equipment to: (i) interconnect the Large Generating Facility with the Participating TO's Transmission System; (ii) operate and maintain the Large Generating Facility, the Interconnection Facilities and the Participating TO's Transmission System; and (iii) disconnect or remove the Access Party's facilities and equipment upon termination of this LGIA. In exercising such licenses, rights of way and easements, the Access Party shall not unreasonably disrupt or interfere with normal operation of the Granting Party's business and shall adhere to the safety rules and procedures established in advance, as may be changed from time to time, by the Granting Party and provided to the Access Party.

5.13 Lands of Other Property Owners. If any part of the Participating TO's Interconnection Facilities and/or Network Upgrades are to be installed on property owned by persons other than the Interconnection Customer or Participating TO, the Participating TO shall at the Interconnection Customer's expense use efforts, similar in nature and extent to those that it typically undertakes on its own behalf or on behalf of its Affiliates, including use of its eminent domain authority, and to the extent consistent with state law, to procure from such persons any rights of use, licenses, rights of way and easements that are necessary to construct, operate, maintain, test, inspect, replace or remove the Participating TO's Interconnection Facilities and/or Network Upgrades upon such property.

5.14 Permits. Participating TO and Interconnection Customer shall cooperate with each other in good faith in obtaining all permits, licenses and authorization that are necessary to accomplish the interconnection in compliance with Applicable Laws and Regulations. With respect to this paragraph, the Participating TO shall provide permitting assistance to the Interconnection Customer comparable to that provided to the Participating TO's own, or an Affiliate's generation.

5.15 Early Construction of Base Case Facilities. The Interconnection Customer may request the Participating TO to construct, and the Participating TO shall construct, using Reasonable Efforts to accommodate Interconnection Customer's

In-Service Date, all or any portion of any Network Upgrades required for Interconnection Customer to be interconnected to the Participating TO's Transmission System which are included in the Base Case of the Interconnection Studies for the Interconnection Customer, and which also are required to be constructed for another interconnection customer, but where such construction is not scheduled to be completed in time to achieve Interconnection Customer's In-Service Date.

5.16 Suspension. The Interconnection Customer reserves the right, upon written notice to the Participating TO and the CAISO, to suspend at any time all work associated with the construction and installation of the Participating TO's Interconnection Facilities, Network Upgrades, and/or Distribution Upgrades required under this LGIA with the condition that the Participating TO's electrical system and the CAISO Controlled Grid shall be left in a safe and reliable condition in accordance with Good Utility Practice and the Participating TO's safety and reliability criteria and the CAISO's Applicable Reliability Standards. In such event, the Interconnection Customer shall be responsible for all reasonable and necessary costs which the Participating TO (i) has incurred pursuant to this LGIA prior to the suspension and (ii) incurs in suspending such work, including any costs incurred to perform such work as may be necessary to ensure the safety of persons and property and the integrity of the Participating TO's electric system during such suspension and, if applicable, any costs incurred in connection with the cancellation or suspension of material, equipment and labor contracts which the Participating TO cannot reasonably avoid; provided, however, that prior to canceling or suspending any such material, equipment or labor contract, the Participating TO shall obtain Interconnection Customer's authorization to do so.

The Participating TO shall invoice the Interconnection Customer for such costs pursuant to Article 12 and shall use due diligence to minimize its costs. In the event Interconnection Customer suspends work required under this LGIA pursuant to this Article 5.16, and has not requested the Participating TO to recommence the work or has not itself recommenced work required under this LGIA on or before the expiration of three (3) years following commencement of such suspension, this LGIA shall be deemed terminated. The three-year period shall begin on the date the suspension is requested, or the date of the written notice to the Participating TO and the CAISO, if no effective date is specified.

5.17 Taxes.

5.17.1 Interconnection Customer Payments Not Taxable. The Parties intend that all payments or property transfers made by the Interconnection Customer to the Participating TO for the installation of the Participating TO's Interconnection Facilities and the Network Upgrades shall be non-taxable, either as contributions to capital, or as a refundable advance, in accordance with the Internal Revenue Code and any applicable state income tax laws and shall not be taxable as contributions in aid of

construction or otherwise under the Internal Revenue Code and any applicable state income tax laws.

5.17.2 Representations And Covenants. In accordance with IRS Notice 2001-82 and IRS Notice 88-129, the Interconnection Customer represents and covenants that (i) ownership of the electricity generated at the Large Generating Facility will pass to another party prior to the transmission of the electricity on the CAISO Controlled Grid, (ii) for income tax purposes, the amount of any payments and the cost of any property transferred to the Participating TO for the Participating TO's Interconnection Facilities will be capitalized by the Interconnection Customer as an intangible asset and recovered using the straight-line method over a useful life of twenty (20) years, and (iii) any portion of the Participating TO's Interconnection Facilities that is a "dual-use intertie," within the meaning of IRS Notice 88-129, is reasonably expected to carry only a de minimis amount of electricity in the direction of the Large Generating Facility. For this purpose, "de minimis amount" means no more than 5 percent of the total power flows in both directions, calculated in accordance with the "5 percent test" set forth in IRS Notice 88-129. This is not intended to be an exclusive list of the relevant conditions that must be met to conform to IRS requirements for non-taxable treatment.

At the Participating TO's request, the Interconnection Customer shall provide the Participating TO with a report from an independent engineer confirming its representation in clause (iii), above. The Participating TO represents and covenants that the cost of the Participating TO's Interconnection Facilities paid for by the Interconnection Customer without the possibility of refund or credit will have no net effect on the base upon which rates are determined.

5.17.3 Indemnification for the Cost Consequence of Current Tax Liability Imposed Upon the Participating TO. Notwithstanding Article 5.17.1, the Interconnection Customer shall protect, indemnify and hold harmless the Participating TO from the cost consequences of any current tax liability imposed against the Participating TO as the result of payments or property transfers made by the Interconnection Customer to the Participating TO under this LGIA for Interconnection Facilities, as well as any interest and penalties, other than interest and penalties attributable to any delay caused by the Participating TO.

The Participating TO shall not include a gross-up for the cost consequences of any current tax liability in the amounts it charges the Interconnection Customer under this LGIA unless (i) the Participating TO has determined, in good faith, that the payments or property transfers made by the Interconnection Customer to the Participating TO should be reported as income subject to taxation or (ii) any Governmental Authority

directs the Participating TO to report payments or property as income subject to taxation; provided, however, that the Participating TO may require the Interconnection Customer to provide security for Interconnection Facilities, in a form reasonably acceptable to the Participating TO (such as a parental guarantee or a letter of credit), in an amount equal to the cost consequences of any current tax liability under this Article 5.17. The Interconnection Customer shall reimburse the Participating TO for such costs on a fully grossed-up basis, in accordance with Article 5.17.4, within thirty (30) Calendar Days of receiving written notification from the Participating TO of the amount due, including detail about how the amount was calculated.

The indemnification obligation shall terminate at the earlier of (1) the expiration of the ten year testing period and the applicable statute of limitation, as it may be extended by the Participating TO upon request of the IRS, to keep these years open for audit or adjustment, or (2) the occurrence of a subsequent taxable event and the payment of any related indemnification obligations as contemplated by this Article 5.17.

5.17.4 Tax Gross-Up Amount. The Interconnection Customer's liability for the cost consequences of any current tax liability under this Article 5.17 shall be calculated on a fully grossed-up basis. Except as may otherwise be agreed to by the parties, this means that the Interconnection Customer will pay the Participating TO, in addition to the amount paid for the Interconnection Facilities and Network Upgrades, an amount equal to (1) the current taxes imposed on the Participating TO ("Current Taxes") on the excess of (a) the gross income realized by the Participating TO as a result of payments or property transfers made by the Interconnection Customer to the Participating TO under this LGIA (without regard to any payments under this Article 5.17) (the "Gross Income Amount") over (b) the present value of future tax deductions for depreciation that will be available as a result of such payments or property transfers (the "Present Value Depreciation Amount"), plus (2) an additional amount sufficient to permit the Participating TO to receive and retain, after the payment of all Current Taxes, an amount equal to the net amount described in clause (1).

For this purpose, (i) Current Taxes shall be computed based on the Participating TO's composite federal and state tax rates at the time the payments or property transfers are received and the Participating TO will be treated as being subject to tax at the highest marginal rates in effect at that time (the "Current Tax Rate"), and (ii) the Present Value Depreciation Amount shall be computed by discounting the Participating TO's anticipated tax depreciation deductions as a result of such payments or property transfers by the Participating TO's current weighted average cost of capital. Thus, the formula for calculating the Interconnection

Customer's liability to the Participating TO pursuant to this Article 5.17.4 can be expressed as follows: (Current Tax Rate x (Gross Income Amount – Present Value of Tax Depreciation))/(1-Current Tax Rate). Interconnection Customer's estimated tax liability in the event taxes are imposed shall be stated in Appendix A, Interconnection Facilities, Network Upgrades and Distribution Upgrades.

5.17.5 Private Letter Ruling or Change or Clarification of Law. At the Interconnection Customer's request and expense, the Participating TO shall file with the IRS a request for a private letter ruling as to whether any property transferred or sums paid, or to be paid, by the Interconnection Customer to the Participating TO under this LGIA are subject to federal income taxation. The Interconnection Customer will prepare the initial draft of the request for a private letter ruling, and will certify under penalties of perjury that all facts represented in such request are true and accurate to the best of the Interconnection Customer's knowledge. The Participating TO and Interconnection Customer shall cooperate in good faith with respect to the submission of such request, provided, however, the Interconnection Customer and the Participating TO explicitly acknowledge (and nothing herein is intended to alter) Participating TO's obligation under law to certify that the facts presented in the ruling request are true, correct and complete.

The Participating TO shall keep the Interconnection Customer fully informed of the status of such request for a private letter ruling and shall execute either a privacy act waiver or a limited power of attorney, in a form acceptable to the IRS, that authorizes the Interconnection Customer to participate in all discussions with the IRS regarding such request for a private letter ruling. The Participating TO shall allow the Interconnection Customer to attend all meetings with IRS officials about the request and shall permit the Interconnection Customer to prepare the initial drafts of any follow-up letters in connection with the request.

5.17.6 Subsequent Taxable Events. If, within 10 years from the date on which the relevant Participating TO's Interconnection Facilities are placed in service, (i) the Interconnection Customer Breaches the covenants contained in Article 5.17.2, (ii) a "disqualification event" occurs within the meaning of IRS Notice 88-129, or (iii) this LGIA terminates and the Participating TO retains ownership of the Interconnection Facilities and Network Upgrades, the Interconnection Customer shall pay a tax gross-up for the cost consequences of any current tax liability imposed on the Participating TO, calculated using the methodology described in Article 5.17.4 and in accordance with IRS Notice 90-60.

5.17.7 Contests. In the event any Governmental Authority determines that the Participating TO's receipt of payments or property constitutes income that

is subject to taxation, the Participating TO shall notify the Interconnection Customer, in writing, within thirty (30) Calendar Days of receiving notification of such determination by a Governmental Authority. Upon the timely written request by the Interconnection Customer and at the Interconnection Customer's sole expense, the Participating TO may appeal, protest, seek abatement of, or otherwise oppose such determination. Upon the Interconnection Customer's written request and sole expense, the Participating TO may file a claim for refund with respect to any taxes paid under this Article 5.17, whether or not it has received such a determination. The Participating TO reserve the right to make all decisions with regard to the prosecution of such appeal, protest, abatement or other contest, including the selection of counsel and compromise or settlement of the claim, but the Participating TO shall keep the Interconnection Customer informed, shall consider in good faith suggestions from the Interconnection Customer about the conduct of the contest, and shall reasonably permit the Interconnection Customer or an Interconnection Customer representative to attend contest proceedings.

The Interconnection Customer shall pay to the Participating TO on a periodic basis, as invoiced by the Participating TO, the Participating TO's documented reasonable costs of prosecuting such appeal, protest, abatement or other contest, including any costs associated with obtaining the opinion of independent tax counsel described in this Article 5.17.7. The Participating TO may abandon any contest if the Interconnection Customer fails to provide payment to the Participating TO within thirty (30) Calendar Days of receiving such invoice.

At any time during the contest, the Participating TO may agree to a settlement either with the Interconnection Customer's consent or, if such consent is refused, after obtaining written advice from independent nationally-recognized tax counsel, selected by the Participating TO, but reasonably acceptable to the Interconnection Customer, that the proposed settlement represents a reasonable settlement given the hazards of litigation. The Interconnection Customer's obligation shall be based on the amount of the settlement agreed to by the Interconnection Customer, or if a higher amount, so much of the settlement that is supported by the written advice from nationally-recognized tax counsel selected under the terms of the preceding paragraph. The settlement amount shall be calculated on a fully grossed-up basis to cover any related cost consequences of the current tax liability. The Participating TO may also settle any tax controversy without receiving the Interconnection Customer's consent or any such written advice; however, any such settlement will relieve the Interconnection Customer from any obligation to indemnify the Participating TO for the tax at issue in the contest (unless the failure to obtain written advice is attributable to the Interconnection

Customer's unreasonable refusal to the appointment of independent tax counsel).

5.17.8 Refund. In the event that (a) a private letter ruling is issued to the Participating TO which holds that any amount paid or the value of any property transferred by the Interconnection Customer to the Participating TO under the terms of this LGIA is not subject to federal income taxation, (b) any legislative change or administrative announcement, notice, ruling or other determination makes it reasonably clear to the Participating TO in good faith that any amount paid or the value of any property transferred by the Interconnection Customer to the Participating TO under the terms of this LGIA is not taxable to the Participating TO, (c) any abatement, appeal, protest, or other contest results in a determination that any payments or transfers made by the Interconnection Customer to the Participating TO are not subject to federal income tax, or (d) if the Participating TO receives a refund from any taxing authority for any overpayment of tax attributable to any payment or property transfer made by the Interconnection Customer to the Participating TO pursuant to this LGIA, the Participating TO shall promptly refund to the Interconnection Customer the following:

(i) any payment made by Interconnection Customer under this Article 5.17 for taxes that is attributable to the amount determined to be non-taxable, together with interest thereon,

(ii) interest on any amounts paid by the Interconnection Customer to the Participating TO for such taxes which the Participating TO did not submit to the taxing authority, calculated in accordance with the methodology set forth in FERC's regulations at 18 C.F.R. §35.19a(a)(2)(iii) from the date payment was made by the Interconnection Customer to the date the Participating TO refunds such payment to the Interconnection Customer, and

(iii) with respect to any such taxes paid by the Participating TO, any refund or credit the Participating TO receives or to which it may be entitled from any Governmental Authority, interest (or that portion thereof attributable to the payment described in clause (i), above) owed to the Participating TO for such overpayment of taxes (including any reduction in interest otherwise payable by the Participating TO to any Governmental Authority resulting from an offset or credit); provided, however, that the Participating TO will remit such amount promptly to the Interconnection Customer only after and to the extent that the Participating TO has received a tax refund, credit or offset from any Governmental Authority for any applicable overpayment of income tax related to the Participating TO's Interconnection Facilities.

The intent of this provision is to leave the Parties, to the extent practicable, in the event that no taxes are due with respect to any payment for Interconnection Facilities and Network Upgrades hereunder, in the same position they would have been in had no such tax payments been made.

5.17.9 Taxes Other Than Income Taxes. Upon the timely request by the Interconnection Customer, and at the Interconnection Customer's sole expense, the CAISO or Participating TO may appeal, protest, seek abatement of, or otherwise contest any tax (other than federal or state income tax) asserted or assessed against the CAISO or Participating TO for which the Interconnection Customer may be required to reimburse the CAISO or Participating TO under the terms of this LGIA. The Interconnection Customer shall pay to the Participating TO on a periodic basis, as invoiced by the Participating TO, the Participating TO's documented reasonable costs of prosecuting such appeal, protest, abatement, or other contest. The Interconnection Customer, the CAISO, and the Participating TO shall cooperate in good faith with respect to any such contest. Unless the payment of such taxes is a prerequisite to an appeal or abatement or cannot be deferred, no amount shall be payable by the Interconnection Customer to the CAISO or Participating TO for such taxes until they are assessed by a final, non-appealable order by any court or agency of competent jurisdiction. In the event that a tax payment is withheld and ultimately due and payable after appeal, the Interconnection Customer will be responsible for all taxes, interest and penalties, other than penalties attributable to any delay caused by the Participating TO.

5.18 Tax Status. Each Party shall cooperate with the others to maintain the other Parties' tax status. Nothing in this LGIA is intended to adversely affect the CAISO's or any Participating TO's tax exempt status with respect to the issuance of bonds including, but not limited to, Local Furnishing Bonds.

5.19 Modification.

5.19.1 General. The Interconnection Customer or the Participating TO may undertake modifications to its facilities, subject to the provisions of this LGIA and the CAISO Tariff. If a Party plans to undertake a modification that reasonably may be expected to affect the other Parties' facilities, that Party shall provide to the other Parties sufficient information regarding such modification so that the other Parties may evaluate the potential impact of such modification prior to commencement of the work. Such information shall be deemed to be confidential hereunder and shall include information concerning the timing of such modifications and whether such modifications are expected to interrupt the flow of electricity from the Large Generating Facility. The Party desiring to perform such work shall provide the relevant drawings, plans, and specifications to the other

Parties at least ninety (90) Calendar Days in advance of the commencement of the work or such shorter period upon which the Parties may agree, which agreement shall not unreasonably be withheld, conditioned or delayed.

In the case of Large Generating Facility modifications that do not require the Interconnection Customer to submit an Interconnection Request, the CAISO or Participating TO shall provide, within thirty (30) Calendar Days (or such other time as the Parties may agree), an estimate of any additional modifications to the CAISO Controlled Grid, Participating TO's Interconnection Facilities, Network Upgrades or Distribution Upgrades necessitated by such Interconnection Customer modification and a good faith estimate of the costs thereof. The Participating TO and the CAISO shall determine if a Large Generating Facility modification is a Material Modification in accordance with the LGIP.

5.19.2 Standards. Any additions, modifications, or replacements made to a Party's facilities shall be designed, constructed and operated in accordance with this LGIA and Good Utility Practice.

5.19.3 Modification Costs. The Interconnection Customer shall not be directly assigned the costs of any additions, modifications, or replacements that the Participating TO makes to the Participating TO's Interconnection Facilities or the Participating TO's Transmission System to facilitate the interconnection of a third party to the Participating TO's Interconnection Facilities or the Participating TO's Transmission System, or to provide transmission service to a third party under the CAISO Tariff. The Interconnection Customer shall be responsible for the costs of any additions, modifications, or replacements to the Interconnection Facilities that may be necessary to maintain or upgrade such Interconnection Facilities consistent with Applicable Laws and Regulations, Applicable Reliability Standards or Good Utility Practice.

ARTICLE 6. TESTING AND INSPECTION

6.1 Pre-Commercial Operation Date Testing and Modifications. Prior to the Commercial Operation Date, the Participating TO shall test the Participating TO's Interconnection Facilities, Network Upgrades, and Distribution Upgrades and the Interconnection Customer shall test the Large Generating Facility and the Interconnection Customer's Interconnection Facilities to ensure their safe and reliable operation. Similar testing may be required after initial operation. Each Party shall make any modifications to its facilities that are found to be necessary as a result of such testing. The Interconnection Customer shall bear the cost of all such testing and modifications. The Interconnection Customer shall not commence initial parallel operation of an Electric Generating Unit with the Participating TO's Transmission System until the Participating TO provides prior

written approval, which approval shall not be unreasonably withheld, for operation of such Electric Generating Unit. The Interconnection Customer shall generate test energy at the Large Generating Facility only if it has arranged for the delivery of such test energy.

6.2 Post-Commercial Operation Date Testing and Modifications. Each Party shall at its own expense perform routine inspection and testing of its facilities and equipment in accordance with Good Utility Practice as may be necessary to ensure the continued interconnection of the Large Generating Facility with the Participating TO's Transmission System in a safe and reliable manner. Each Party shall have the right, upon advance written notice, to require reasonable additional testing of the other Party's facilities, at the requesting Party's expense, as may be in accordance with Good Utility Practice.

6.3 Right to Observe Testing. Each Party shall notify the other Parties at least fourteen (14) days in advance of its performance of tests of its Interconnection Facilities or Generating Facility. The other Parties have the right, at their own expense, to observe such testing.

6.4 Right to Inspect. Each Party shall have the right, but shall have no obligation to: (i) observe another Party's tests and/or inspection of any of its System Protection Facilities and other protective equipment, including Power System Stabilizers; (ii) review the settings of another Party's System Protection Facilities and other protective equipment; and (iii) review another Party's maintenance records relative to the Interconnection Facilities, the System Protection Facilities and other protective equipment. A Party may exercise these rights from time to time as it deems necessary upon reasonable notice to the other Party. The exercise or non-exercise by a Party of any such rights shall not be construed as an endorsement or confirmation of any element or condition of the Interconnection Facilities or the System Protection Facilities or other protective equipment or the operation thereof, or as a warranty as to the fitness, safety, desirability, or reliability of same. Any information that a Party obtains through the exercise of any of its rights under this Article 6.4 shall be deemed to be Confidential Information and treated pursuant to Article 22 of this LGIA.

ARTICLE 7. METERING

7.1 General. Each Party shall comply with the Applicable Reliability Council requirements. The Interconnection Customer and CAISO shall comply with the provisions of the CAISO Tariff regarding metering, including Section 10 of the CAISO Tariff. Unless otherwise agreed by the Participating TO and the Interconnection Customer, the Participating TO may install additional Metering Equipment at the Point of Interconnection prior to any operation of any Electric Generating Unit and shall own, operate, test and maintain such Metering Equipment. Power flows to and from the Large Generating Facility shall be

measured at or, at the CAISO's or Participating TO's option for its respective Metering Equipment, compensated to, the Point of Interconnection. The CAISO shall provide metering quantities to the Interconnection Customer upon request in accordance with the CAISO Tariff by directly polling the CAISO's meter data acquisition system. The Interconnection Customer shall bear all reasonable documented costs associated with the purchase, installation, operation, testing and maintenance of the Metering Equipment.

7.2 Check Meters. The Interconnection Customer, at its option and expense, may install and operate, on its premises and on its side of the Point of Interconnection, one or more check meters to check the CAISO-polled meters or the Participating TO's meters. Such check meters shall be for check purposes only and shall not be used for the measurement of power flows for purposes of this LGIA, except in the case that no other means are available on a temporary basis at the option of the CAISO or the Participating TO. The check meters shall be subject at all reasonable times to inspection and examination by the CAISO or Participating TO or their designees. The installation, operation and maintenance thereof shall be performed entirely by the Interconnection Customer in accordance with Good Utility Practice.

7.3 Participating TO Retail Metering. The Participating TO may install retail revenue quality meters and associated equipment, pursuant to the Participating TO's applicable retail tariffs.

ARTICLE 8. COMMUNICATIONS

8.1 Interconnection Customer Obligations. The Interconnection Customer shall maintain satisfactory operating communications with the CAISO in accordance with the provisions of the CAISO Tariff and with the Participating TO's dispatcher or representative designated by the Participating TO. The Interconnection Customer shall provide standard voice line, dedicated voice line and facsimile communications at its Large Generating Facility control room or central dispatch facility through use of either the public telephone system, or a voice communications system that does not rely on the public telephone system. The Interconnection Customer shall also provide the dedicated data circuit(s) necessary to provide Interconnection Customer data to the CAISO and Participating TO as set forth in Appendix D, Security Arrangements Details. The data circuit(s) shall extend from the Large Generating Facility to the location(s) specified by the CAISO and Participating TO. Any required maintenance of such communications equipment shall be performed by the Interconnection Customer. Operational communications shall be activated and maintained under, but not be limited to, the following events: system paralleling or separation, scheduled and unscheduled shutdowns, equipment clearances, and hourly and daily load data.

8.2 Remote Terminal Unit. Prior to the Initial Synchronization Date of each Electric Generating Unit, a Remote Terminal Unit, or equivalent data collection and transfer equipment acceptable to the Parties, shall be installed by the Interconnection Customer, or by the Participating TO at the Interconnection Customer's expense, to gather accumulated and instantaneous data to be telemetered to the location(s) designated by the CAISO and by the Participating TO through use of a dedicated point-to-point data circuit(s) as indicated in Article 8.1.
Telemetry to the CAISO shall be provided in accordance with the CAISO's technical standards for direct telemetry. For telemetry to the Participating TO, the communication protocol for the data circuit(s) shall be specified by the Participating TO. Instantaneous bi-directional real power and reactive power flow and any other required information must be telemetered directly to the location(s) specified by the Participating TO.

Each Party will promptly advise the other Parties if it detects or otherwise learns of any metering, telemetry or communications equipment errors or malfunctions that require the attention and/or correction by another Party. The Party owning such equipment shall correct such error or malfunction as soon as reasonably feasible.

8.3 No Annexation. Any and all equipment placed on the premises of a Party shall be and remain the property of the Party providing such equipment regardless of the mode and manner of annexation or attachment to real property, unless otherwise mutually agreed by the Parties.

ARTICLE 9. OPERATIONS

9.1 General. Each Party shall comply with the Applicable Reliability Council requirements, and the Interconnection Customer shall execute the Reliability Management System Agreement of the Applicable Reliability Council attached hereto as Appendix G. Each Party shall provide to the other Party all information that may reasonably be required by the other Party to comply with Applicable Laws and Regulations and Applicable Reliability Standards.

9.2 Balancing Authority Area Notification. At least three months before Initial Synchronization Date, the Interconnection Customer shall notify the CAISO and Participating TO in writing of the Balancing Authority Area in which the Large Generating Facility intends to be located. If the Interconnection Customer intends to locate the Large Generating Facility in a Balancing Authority Area other than the Balancing Authority Area within whose electrically metered boundaries the Large Generating Facility is located, and if permitted to do so by the relevant transmission tariffs, all necessary arrangements, including but not limited to those set forth in Article 7 and Article 8 of this LGIA, and remote Balancing Authority Area generator interchange agreements, if applicable, and

the appropriate measures under such agreements, shall be executed and implemented prior to the placement of the Large Generating Facility in the other Balancing Authority Area.

9.3 CAISO and Participating TO Obligations. The CAISO and Participating TO shall cause the Participating TO's Transmission System to be operated and controlled in a safe and reliable manner and in accordance with this LGIA. The Participating TO at the Interconnection Customer's expense shall cause the Participating TO's Interconnection Facilities to be operated, maintained and controlled in a safe and reliable manner and in accordance with this LGIA. The CAISO and Participating TO may provide operating instructions to the Interconnection Customer consistent with this LGIA and Participating TO and CAISO operating protocols and procedures as they may change from time to time. The Participating TO and CAISO will consider changes to their operating protocols and procedures proposed by the Interconnection Customer.

9.4 Interconnection Customer Obligations. The Interconnection Customer shall at its own expense operate, maintain and control the Large Generating Facility and the Interconnection Customer's Interconnection Facilities in a safe and reliable manner and in accordance with this LGIA. The Interconnection Customer shall operate the Large Generating Facility and the Interconnection Customer's Interconnection Facilities in accordance with all applicable requirements of the Balancing Authority Area of which it is part, including such requirements as set forth in Appendix C, Interconnection Details, of this LGIA. Appendix C, Interconnection Details, will be modified to reflect changes to the requirements as they may change from time to time. A Party may request that another Party provide copies of the requirements set forth in Appendix C, Interconnection Details, of this LGIA. The Interconnection Customer shall not commence Commercial Operation of an Electric Generating Unit with the Participating TO's Transmission System until the Participating TO provides prior written approval, which approval shall not be unreasonably withheld, for operation of such Electric Generating Unit.

9.5 Start-Up and Synchronization. Consistent with the Parties' mutually acceptable procedures, the Interconnection Customer is responsible for the proper synchronization of each Electric Generating Unit to the CAISO Controlled Grid.

9.6 Reactive Power.

9.6.1 Power Factor Design Criteria. The Interconnection Customer shall design the Large Generating Facility to maintain a composite power delivery at continuous rated power output at the terminals of the Electric Generating Unit at a power factor within the range of 0.95 leading to 0.90 lagging, unless the CAISO has established different requirements that apply to all generators in the Balancing Authority Area on a comparable

basis. Power factor design criteria for wind generators are provided in Appendix H of this LGIA.

9.6.2 Voltage Schedules. Once the Interconnection Customer has synchronized an Electric Generating Unit with the CAISO Controlled Grid, the CAISO or Participating TO shall require the Interconnection Customer to maintain a voltage schedule by operating the Electric Generating Unit to produce or absorb reactive power within the design limitations of the Electric Generating Unit set forth in Article 9.6.1 (Power Factor Design Criteria). CAISO's voltage schedules shall treat all sources of reactive power in the Balancing Authority Area in an equitable and not unduly discriminatory manner. The Participating TO shall exercise Reasonable Efforts to provide the Interconnection Customer with such schedules at least one (1) day in advance, and the CAISO or Participating TO may make changes to such schedules as necessary to maintain the reliability of the CAISO Controlled Grid or the Participating TO's electric system. The Interconnection Customer shall operate the Electric Generating Unit to maintain the specified output voltage or power factor within the design limitations of the Electric Generating Unit set forth in Article 9.6.1 (Power Factor Design Criteria), and as may be required by the CAISO to operate the Electric Generating Unit at a specific voltage schedule within the design limitations set forth in Article 9.6.1. If the Interconnection Customer is unable to maintain the specified voltage or power factor, it shall promptly notify the CAISO and the Participating TO.

9.6.2.1 Governors and Regulators. Whenever an Electric Generating Unit is operated in parallel with the CAISO Controlled Grid and the speed governors (if installed on the Electric Generating Unit pursuant to Good Utility Practice) and voltage regulators are capable of operation, the Interconnection Customer shall operate the Electric Generating Unit with its speed governors and voltage regulators in automatic operation. If the Electric Generating Unit's speed governors and voltage regulators are not capable of such automatic operation, the Interconnection Customer shall immediately notify the CAISO and the Participating TO and ensure that the Electric Generating Unit operates as specified in Article 9.6.2 through manual operation and that such Electric Generating Unit's reactive power production or absorption (measured in MVARs) are within the design capability of the Electric Generating Unit(s) and steady state stability limits. The Interconnection Customer shall restore the speed governors and voltage regulators to automatic operation as soon as possible and in accordance with the Reliability Management System Agreement in Appendix G. If the Large Generating Facility's speed governors and voltage regulators are improperly tuned or malfunctioning, the CAISO shall have the right to order the reduction in output or

disconnection of the Large Generating Facility if the reliability of the CAISO Controlled Grid would be adversely affected. The Interconnection Customer shall not cause its Large Generating Facility to disconnect automatically or instantaneously from the CAISO Controlled Grid or trip any Electric Generating Unit comprising the Large Generating Facility for an under or over frequency condition unless the abnormal frequency condition persists for a time period beyond the limits set forth in ANSI/IEEE Standard C37.106, or such other standard as applied to other generators in the Balancing Authority Area on a comparable basis.

9.6.3 Payment for Reactive Power. CAISO is required to pay the Interconnection Customer for reactive power that Interconnection Customer provides or absorbs from an Electric Generating Unit when the CAISO requests the Interconnection Customer to operate its Electric Generating Unit outside the range specified in Article 9.6.1, provided that if the CAISO pays other generators for reactive power service within the specified range, it must also pay the Interconnection Customer. Payments shall be pursuant to Article 11.6 or such other agreement to which the CAISO and Interconnection Customer have otherwise agreed.

9.7 Outages and Interruptions.

9.7.1 Outages.

9.7.1.1 Outage Authority and Coordination. Each Party may in accordance with Good Utility Practice in coordination with the other Parties remove from service any of its respective Interconnection Facilities or Network Upgrades that may impact another Party's facilities as necessary to perform maintenance or testing or to install or replace equipment. Absent an Emergency Condition, the Party scheduling a removal of such facility(ies) from service will use Reasonable Efforts to schedule such removal on a date and time mutually acceptable to all Parties. In all circumstances any Party planning to remove such facility(ies) from service shall use Reasonable Efforts to minimize the effect on the other Parties of such removal.

9.7.1.2 Outage Schedules. The CAISO shall post scheduled outages of CAISO Controlled Grid facilities in accordance with the provisions of the CAISO Tariff. The Interconnection Customer shall submit its planned maintenance schedules for the Large Generating Facility to the CAISO in accordance with the CAISO Tariff. The Interconnection Customer shall update its planned maintenance schedules in accordance with the CAISO Tariff. The CAISO may request the Interconnection Customer to reschedule its

maintenance as necessary to maintain the reliability of the CAISO Controlled Grid in accordance with the CAISO Tariff. Such planned maintenance schedules and updates and changes to such schedules shall be provided by the Interconnection Customer to the Participating TO concurrently with their submittal to the CAISO. The CAISO shall compensate the Interconnection Customer for any additional direct costs that the Interconnection Customer incurs as a result of having to reschedule maintenance in accordance with the CAISO Tariff. The Interconnection Customer will not be eligible to receive compensation, if during the twelve (12) months prior to the date of the scheduled maintenance, the Interconnection Customer had modified its schedule of maintenance activities.

9.7.1.3 **Outage Restoration**. If an outage on a Party's Interconnection Facilities or Network Upgrades adversely affects another Party's operations or facilities, the Party that owns or controls the facility that is out of service shall use Reasonable Efforts to promptly restore such facility(ies) to a normal operating condition consistent with the nature of the outage. The Party that owns or controls the facility that is out of service shall provide the other Parties, to the extent such information is known, information on the nature of the Emergency Condition, if the outage is caused by an Emergency Condition, an estimated time of restoration, and any corrective actions required. Initial verbal notice shall be followed up as soon as practicable with written notice explaining the nature of the outage, if requested by a Party, which may be provided by e-mail or facsimile.

9.7.2 **Interruption of Service**. If required by Good Utility Practice to do so, the CAISO or the Participating TO may require the Interconnection Customer to interrupt or reduce deliveries of electricity if such delivery of electricity could adversely affect the CAISO's or the Participating TO's ability to perform such activities as are necessary to safely and reliably operate and maintain the Participating TO's electric system or the CAISO Controlled Grid. The following provisions shall apply to any interruption or reduction permitted under this Article 9.7.2:

9.7.2.1 The interruption or reduction shall continue only for so long as reasonably necessary under Good Utility Practice;

9.7.2.2 Any such interruption or reduction shall be made on an equitable, non-discriminatory basis with respect to all generating facilities directly connected to the CAISO Controlled Grid, subject to any conditions specified in this LGIA;

9.7.2.3 When the interruption or reduction must be made under circumstances which do not allow for advance notice, the CAISO or Participating TO, as applicable, shall notify the Interconnection Customer by telephone as soon as practicable of the reasons for the curtailment, interruption, or reduction, and, if known, its expected duration. Telephone notification shall be followed by written notification, if requested by the Interconnection Customer, as soon as practicable;

9.7.2.4 Except during the existence of an Emergency Condition, the CAISO or Participating TO shall notify the Interconnection Customer in advance regarding the timing of such interruption or reduction and further notify the Interconnection Customer of the expected duration. The CAISO or Participating TO shall coordinate with the Interconnection Customer using Good Utility Practice to schedule the interruption or reduction during periods of least impact to the Interconnection Customer, the CAISO, and the Participating TO;

9.7.2.5 The Parties shall cooperate and coordinate with each other to the extent necessary in order to restore the Large Generating Facility, Interconnection Facilities, the Participating TO's Transmission System, and the CAISO Controlled Grid to their normal operating state, consistent with system conditions and Good Utility Practice.

9.7.3 Under-Frequency and Over Frequency Conditions. The CAISO Controlled Grid is designed to automatically activate a load-shed program as required by the Applicable Reliability Council in the event of an under-frequency system disturbance. The Interconnection Customer shall implement under-frequency and over-frequency protection set points for the Large Generating Facility as required by the Applicable Reliability Council to ensure "ride through" capability. Large Generating Facility response to frequency deviations of pre-determined magnitudes, both under-frequency and over-frequency deviations, shall be studied and coordinated with the Participating TO and CAISO in accordance with Good Utility Practice. The term "ride through" as used herein shall mean the ability of a Generating Facility to stay connected to and synchronized with the CAISO Controlled Grid during system disturbances within a range of under-frequency and over-frequency conditions, in accordance with Good Utility Practice.

9.7.4 System Protection and Other Control Requirements.

9.7.4.1 System Protection Facilities. The Interconnection Customer shall, at its expense, install, operate and maintain

System Protection Facilities as a part of the Large Generating Facility or the Interconnection Customer's Interconnection Facilities. The Participating TO shall install at the Interconnection Customer's expense any System Protection Facilities that may be required on the Participating TO's Interconnection Facilities or the Participating TO's Transmission System as a result of the interconnection of the Large Generating Facility and the Interconnection Customer's Interconnection Facilities.

9.7.4.2 The Participating TO's and Interconnection Customer's protection facilities shall be designed and coordinated with other systems in accordance with Applicable Reliability Council criteria and Good Utility Practice.

9.7.4.3 The Participating TO and Interconnection Customer shall each be responsible for protection of its facilities consistent with Good Utility Practice.

9.7.4.4 The Participating TO's and Interconnection Customer's protective relay design shall incorporate the necessary test switches to perform the tests required in Article 6. The required test switches will be placed such that they allow operation of lockout relays while preventing breaker failure schemes from operating and causing unnecessary breaker operations and/or the tripping of the Interconnection Customer's Electric Generating Units.

9.7.4.5 The Participating TO and Interconnection Customer will test, operate and maintain System Protection Facilities in accordance with Good Utility Practice and, if applicable, the requirements of the Participating TO's Interconnection Handbook.

9.7.4.6 Prior to the in-service date, and again prior to the Commercial Operation Date, the Participating TO and Interconnection Customer or their agents shall perform a complete calibration test and functional trip test of the System Protection Facilities. At intervals suggested by Good Utility Practice, the standards and procedures of the Participating TO, including, if applicable, the requirements of the Participating TO's Interconnection Handbook, and following any apparent malfunction of the System Protection Facilities, each Party shall perform both calibration and functional trip tests of its System Protection Facilities. These tests do not require the tripping of any in-service generation unit. These tests do, however, require that all protective relays and lockout contacts be activated.

9.7.5 Requirements for Protection. In compliance with Good Utility Practice and, if applicable, the requirements of the Participating TO's Interconnection Handbook, the Interconnection Customer shall provide, install, own, and maintain relays, circuit breakers and all other devices necessary to remove any fault contribution of the Large Generating Facility to any short circuit occurring on the Participating TO's Transmission System not otherwise isolated by the Participating TO's equipment, such that the removal of the fault contribution shall be coordinated with the protective requirements of the Participating TO's Transmission System. Such protective equipment shall include, without limitation, a disconnecting device with fault current-interrupting capability located between the Large Generating Facility and the Participating TO's Transmission System at a site selected upon mutual agreement (not to be unreasonably withheld, conditioned or delayed) of the Parties. The Interconnection Customer shall be responsible for protection of the Large Generating Facility and the Interconnection Customer's other equipment from such conditions as negative sequence currents, over- or under-frequency, sudden load rejection, over- or under-voltage, and generator loss-of-field. The Interconnection Customer shall be solely responsible to disconnect the Large Generating Facility and the Interconnection Customer's other equipment if conditions on the CAISO Controlled Grid could adversely affect the Large Generating Facility.

9.7.6 Power Quality. Neither the Participating TO's nor the Interconnection Customer's facilities shall cause excessive voltage flicker nor introduce excessive distortion to the sinusoidal voltage or current waves as defined by ANSI Standard C84.1-1989, in accordance with IEEE Standard 519, any applicable superseding electric industry standard, or any alternative Applicable Reliability Council standard. In the event of a conflict between ANSI Standard C84.1-1989, any applicable superseding electric industry standard, or any alternative Applicable Reliability Council standard, the alternative Applicable Reliability Council standard shall control.

9.8 Switching and Tagging Rules. Each Party shall provide the other Parties a copy of its switching and tagging rules that are applicable to the other Parties' activities. Such switching and tagging rules shall be developed on a non-discriminatory basis. The Parties shall comply with applicable switching and tagging rules, as amended from time to time, in obtaining clearances for work or for switching operations on equipment.

9.9 Use of Interconnection Facilities by Third Parties.

9.9.1 Purpose of Interconnection Facilities. Except as may be required by Applicable Laws and Regulations, or as otherwise agreed to among the Parties, the Interconnection Facilities shall be constructed for the sole purpose of interconnecting the Large Generating Facility to the

Participating TO's Transmission System and shall be used for no other purpose.

9.9.2 Third Party Users. If required by Applicable Laws and Regulations or if the Parties mutually agree, such agreement not to be unreasonably withheld, to allow one or more third parties to use the Participating TO's Interconnection Facilities, or any part thereof, the Interconnection Customer will be entitled to compensation for the capital expenses it incurred in connection with the Interconnection Facilities based upon the pro rata use of the Interconnection Facilities by the Participating TO, all third party users, and the Interconnection Customer, in accordance with Applicable Laws and Regulations or upon some other mutually-agreed upon methodology. In addition, cost responsibility for ongoing costs, including operation and maintenance costs associated with the Interconnection Facilities, will be allocated between the Interconnection Customer and any third party users based upon the pro rata use of the Interconnection Facilities by the Participating TO, all third party users, and the Interconnection Customer, in accordance with Applicable Laws and Regulations or upon some other mutually agreed upon methodology. If the issue of such compensation or allocation cannot be resolved through such negotiations, it shall be submitted to FERC for resolution.

9.10 Disturbance Analysis Data Exchange. The Parties will cooperate with one another in the analysis of disturbances to either the Large Generating Facility or the CAISO Controlled Grid by gathering and providing access to any information relating to any disturbance, including information from oscillography, protective relay targets, breaker operations and sequence of events records, and any disturbance information required by Good Utility Practice.

ARTICLE 10. MAINTENANCE

10.1 Participating TO Obligations. The Participating TO shall maintain the Participating TO's Transmission System and the Participating TO's Interconnection Facilities in a safe and reliable manner and in accordance with this LGIA.

10.2 Interconnection Customer Obligations. The Interconnection Customer shall maintain the Large Generating Facility and the Interconnection Customer's Interconnection Facilities in a safe and reliable manner and in accordance with this LGIA.

10.3 Coordination. The Parties shall confer regularly to coordinate the planning, scheduling and performance of preventive and corrective maintenance on the Large Generating Facility and the Interconnection Facilities.

10.4 Secondary Systems. The Participating TO and Interconnection Customer shall cooperate with the other Parties in the inspection, maintenance, and testing of control or power circuits that operate below 600 volts, AC or DC, including, but not limited to, any hardware, control or protective devices, cables, conductors, electric raceways, secondary equipment panels, transducers, batteries, chargers, and voltage and current transformers that directly affect the operation of a Party's facilities and equipment which may reasonably be expected to impact the other Parties. Each Party shall provide advance notice to the other Parties before undertaking any work on such circuits, especially on electrical circuits involving circuit breaker trip and close contacts, current transformers, or potential transformers.

10.5 Operating and Maintenance Expenses. Subject to the provisions herein addressing the use of facilities by others, and except for operations and maintenance expenses associated with modifications made for providing interconnection or transmission service to a third party and such third party pays for such expenses, the Interconnection Customer shall be responsible for all reasonable expenses including overheads, associated with: (1) owning, operating, maintaining, repairing, and replacing the Interconnection Customer's Interconnection Facilities; and (2) operation, maintenance, repair and replacement of the Participating TO's Interconnection Facilities.

ARTICLE 11. PERFORMANCE OBLIGATION

11.1 Interconnection Customer's Interconnection Facilities. The Interconnection Customer shall design, procure, construct, install, own and/or control the Interconnection Customer's Interconnection Facilities described in Appendix A at its sole expense.

11.2 Participating TO's Interconnection Facilities. The Participating TO shall design, procure, construct, install, own and/or control the Participating TO's Interconnection Facilities described in Appendix A at the sole expense of the Interconnection Customer. Unless the Participating TO elects to fund the capital for the Participating TO's Interconnection Facilities, they shall be solely funded by the Interconnection Customer.

11.3 Network Upgrades and Distribution Upgrades. The Participating TO shall design, procure, construct, install, and own the Network Upgrades and Distribution Upgrades described in Appendix A. The Interconnection Customer shall be responsible for all costs related to Distribution Upgrades. Unless the Participating TO elects to fund the capital for the Distribution Upgrades and Network Upgrades, they shall be solely funded by the Interconnection Customer.

11.4 Transmission Credits. No later than thirty (30) days prior to the Commercial Operation Date, the Interconnection Customer may make a one-time election by

written notice to the CAISO and the Participating TO to receive Congestion Revenue Rights as defined in and as available under the CAISO Tariff at the time of the election in accordance with the CAISO Tariff, in lieu of a refund of the cost of Network Upgrades in accordance with Article 11.4.1.

11.4.1 Repayment of Amounts Advanced for Network Upgrades. Upon the Commercial Operation Date, the Interconnection Customer shall be entitled to a repayment, equal to the total amount paid to the Participating TO for the cost of Network Upgrades. Such amount shall include any tax gross-up or other tax-related payments associated with Network Upgrades not refunded to the Interconnection Customer pursuant to Article 5.17.8 or otherwise, and shall be paid to the Interconnection Customer by the Participating TO on a dollar-for-dollar basis either through (1) direct payments made on a levelized basis over the five-year period commencing on the Commercial Operation Date; or (2) any alternative payment schedule that is mutually agreeable to the Interconnection Customer and Participating TO, provided that such amount is paid within five (5) years from the Commercial Operation Date. Notwithstanding the foregoing, if this LGIA terminates within five (5) years from the Commercial Operation Date, the Participating TO's obligation to pay refunds to the Interconnection Customer shall cease as of the date of termination. Any repayment shall include interest calculated in accordance with the methodology set forth in FERC's regulations at 18 C.F.R. §35.19a(a)(2)(iii) from the date of any payment for Network Upgrades through the date on which the Interconnection Customer receives a repayment of such payment. Interest shall continue to accrue on the repayment obligation so long as this LGIA is in effect. The Interconnection Customer may assign such repayment rights to any person.

If the Large Generating Facility fails to achieve commercial operation, but it or another Generating Facility is later constructed and makes use of the Network Upgrades, the Participating TO shall at that time reimburse Interconnection Customer for the amounts advanced for the Network Upgrades. Before any such reimbursement can occur, the Interconnection Customer, or the entity that ultimately constructs the Generating Facility, if different, is responsible for identifying the entity to which reimbursement must be made.

11.4.2 Special Provisions for Affected Systems. The Interconnection Customer shall enter into an agreement with the owner of the Affected System and/or other affected owners of portions of the CAISO Controlled Grid, as applicable, in accordance with the LGIP. Such agreement shall specify the terms governing payments to be made by the Interconnection Customer to the owner of the Affected System and/or other affected owners of portions of the CAISO Controlled Grid as well as the repayment

by the owner of the Affected System and/or other affected owners of portions of the CAISO Controlled Grid. In no event shall the Participating TO be responsible for the repayment for any facilities that are not part of the Participating TO's Transmission System.

11.4.3 Notwithstanding any other provision of this LGIA, nothing herein shall be construed as relinquishing or foreclosing any rights, including but not limited to firm transmission rights, capacity rights, Congestion Revenue Rights, or transmission credits, that the Interconnection Customer shall be entitled to, now or in the future under any other agreement or tariff as a result of, or otherwise associated with, the transmission capacity, if any, created by the Network Upgrades, including the right to obtain cash reimbursements or transmission credits for transmission service that is not associated with the Large Generating Facility.

11.5 Provision of Security. At least thirty (30) Calendar Days prior to the commencement of the procurement, installation, or construction of a discrete portion of a Participating TO's Interconnection Facilities, Network Upgrades, or Distribution Upgrades, the Interconnection Customer shall provide the Participating TO, at the Interconnection Customer's option, a guarantee, a surety bond, letter of credit or other form of security that is reasonably acceptable to the Participating TO and is consistent with the Uniform Commercial Code of the jurisdiction identified in Article 14.2.1. Such security for payment shall be in an amount sufficient to cover the costs for constructing, procuring and installing the applicable portion of the Participating TO's Interconnection Facilities, Network Upgrades, or Distribution Upgrades. Such security shall be reduced on a dollar-for-dollar basis for payments made to the Participating TO for these purposes.

In addition:

11.5.1 The guarantee must be made by an entity that meets the creditworthiness requirements of the Participating TO, and contain terms and conditions that guarantee payment of any amount that may be due from the Interconnection Customer, up to an agreed-to maximum amount.

11.5.2 The letter of credit must be issued by a financial institution reasonably acceptable to the Participating TO and must specify a reasonable expiration date.

11.5.3 The surety bond must be issued by an insurer reasonably acceptable to the Participating TO and must specify a reasonable expiration date.

11.6 Interconnection Customer Compensation. If the CAISO requests or directs the Interconnection Customer to provide a service pursuant to Articles 9.6.3 (Payment for Reactive Power) or 13.5.1 of this LGIA, the CAISO shall compensate the Interconnection Customer in accordance with the CAISO Tariff.

11.6.1 Interconnection Customer Compensation for Actions During Emergency Condition. The CAISO shall compensate the Interconnection Customer in accordance with the CAISO Tariff for its provision of real and reactive power and other Emergency Condition services that the Interconnection Customer provides to support the CAISO Controlled Grid during an Emergency Condition in accordance with Article 11.6.

ARTICLE 12. INVOICE

12.1 General. The Participating TO shall submit to the Interconnection Customer, on a monthly basis, invoices of amounts due pursuant to this LGIA for the preceding month. Each invoice shall state the month to which the invoice applies and fully describe the services and equipment provided. The Parties may discharge mutual debts and payment obligations due and owing to each other on the same date through netting, in which case all amounts a Party owes to the other Party under this LGIA, including interest payments or credits, shall be netted so that only the net amount remaining due shall be paid by the owing Party. Notwithstanding the foregoing, any invoices between the CAISO and another Party shall be submitted and paid in accordance with the CAISO Tariff.

12.2 Final Invoice. As soon as reasonably practicable, but within twelve months after completion of the construction of the Participating TO's Interconnection Facilities, Network Upgrades, and Distribution Upgrades, the Participating TO shall provide an invoice of the final cost of the construction of the Participating TO's Interconnection Facilities, Network Upgrades, and Distribution Upgrades, and shall set forth such costs in sufficient detail to enable the Interconnection Customer to compare the actual costs with the estimates and to ascertain deviations, if any, from the cost estimates. The Participating TO shall refund to the Interconnection Customer any amount by which the actual payment by the Interconnection Customer for estimated costs exceeds the actual costs of construction within thirty (30) Calendar Days of the issuance of such final construction invoice; or, in the event the actual costs of construction exceed the Interconnection Customer's actual payment for estimated costs, then the Interconnection Customer shall pay to the Participating TO any amount by which the actual costs of construction exceed the actual payment by the Interconnection Customer for estimated costs within thirty (30) Calendar Days of the issuance of such final construction invoice.

12.3 Payment. Invoices shall be rendered to the Interconnection Customer at the address specified in Appendix F. The Interconnection Customer shall pay, or Participating TO shall refund, the amounts due within thirty (30) Calendar Days of the Interconnection Customer's receipt of the invoice. All payments shall be made in immediately available funds payable to the Interconnection Customer or

Participating TO, or by wire transfer to a bank named and account designated by the invoicing Interconnection Customer or Participating TO. Payment of invoices by any Party will not constitute a waiver of any rights or claims any Party may have under this LGIA.

12.4 Disputes. In the event of a billing dispute between the Interconnection Customer and the Participating TO, the Participating TO and the CAISO shall continue to provide Interconnection Service under this LGIA as long as the Interconnection Customer: (i) continues to make all payments not in dispute; and (ii) pays to the Participating TO or into an independent escrow account the portion of the invoice in dispute, pending resolution of such dispute. If the Interconnection Customer fails to meet these two requirements for continuation of service, then the Participating TO may provide notice to the Interconnection Customer of a Default pursuant to Article 17. Within thirty (30) Calendar Days after the resolution of the dispute, the Party that owes money to the other Party shall pay the amount due with interest calculated in accordance with the methodology set forth in FERC's Regulations at 18 C.F.R. § 35.19a(a)(2)(iii). Notwithstanding the foregoing, any billing dispute between the CAISO and another Party shall be resolved in accordance with the provisions of Article 27 of this LGIA.

ARTICLE 13. EMERGENCIES

13.1 [Reserved]

13.2 Obligations. Each Party shall comply with the Emergency Condition procedures of the CAISO, NERC, the Applicable Reliability Council, Applicable Laws and Regulations, and any emergency procedures set forth in this LGIA.

13.3 Notice. The Participating TO or the CAISO shall notify the Interconnection Customer promptly when it becomes aware of an Emergency Condition that affects the Participating TO’s Interconnection Facilities or Distribution System or the CAISO Controlled Grid, respectively, that may reasonably be expected to affect the Interconnection Customer's operation of the Large Generating Facility or the Interconnection Customer's Interconnection Facilities. The Interconnection Customer shall notify the Participating TO and the CAISO promptly when it becomes aware of an Emergency Condition that affects the Large Generating Facility or the Interconnection Customer’s Interconnection Facilities that may reasonably be expected to affect the CAISO Controlled Grid or the Participating TO’s Interconnection Facilities. To the extent information is known, the notification shall describe the Emergency Condition, the extent of the damage or deficiency, the expected effect on the operation of the Interconnection Customer's or Participating TO’s facilities and operations, its anticipated duration and the corrective action taken and/or to be taken. The initial notice shall be followed as soon as practicable with written notice, if requested by a Party, which

may be provided by electronic mail or facsimile, or in the case of the CAISO may be publicly posted on the CAISO's internet web site.

13.4 Immediate Action. Unless, in the Interconnection Customer's reasonable judgment, immediate action is required, the Interconnection Customer shall obtain the consent of the CAISO and the Participating TO, such consent to not be unreasonably withheld, prior to performing any manual switching operations at the Large Generating Facility or the Interconnection Customer's Interconnection Facilities in response to an Emergency Condition declared by the Participating TO or CAISO or in response to any other emergency condition.

13.5 CAISO and Participating TO Authority.

13.5.1 General. The CAISO and Participating TO may take whatever actions or inactions, including issuance of dispatch instructions, with regard to the CAISO Controlled Grid or the Participating TO's Interconnection Facilities or Distribution System they deem necessary during an Emergency Condition in order to (i) preserve public health and safety, (ii) preserve the reliability of the CAISO Controlled Grid or the Participating TO's Interconnection Facilities or Distribution System, and (iii) limit or prevent damage, and (iv) expedite restoration of service.

The Participating TO and the CAISO shall use Reasonable Efforts to minimize the effect of such actions or inactions on the Large Generating Facility or the Interconnection Customer's Interconnection Facilities. The Participating TO or the CAISO may, on the basis of technical considerations, require the Large Generating Facility to mitigate an Emergency Condition by taking actions necessary and limited in scope to remedy the Emergency Condition, including, but not limited to, directing the Interconnection Customer to shut-down, start-up, increase or decrease the real or reactive power output of the Large Generating Facility; implementing a reduction or disconnection pursuant to Article 13.5.2; directing the Interconnection Customer to assist with black start (if available) or restoration efforts; or altering the outage schedules of the Large Generating Facility and the Interconnection Customer's Interconnection Facilities. Interconnection Customer shall comply with all of the CAISO's and Participating TO's operating instructions concerning Large Generating Facility real power and reactive power output within the manufacturer's design limitations of the Large Generating Facility's equipment that is in service and physically available for operation at the time, in compliance with Applicable Laws and Regulations.

13.5.2 Reduction and Disconnection. The Participating TO or the CAISO may reduce Interconnection Service or disconnect the Large Generating Facility or the Interconnection Customer's Interconnection Facilities when such reduction or disconnection is necessary under Good Utility Practice

due to Emergency Conditions. These rights are separate and distinct from any right of curtailment of the CAISO pursuant to the CAISO Tariff. When the CAISO or Participating TO can schedule the reduction or disconnection in advance, the CAISO or Participating TO shall notify the Interconnection Customer of the reasons, timing and expected duration of the reduction or disconnection. The CAISO or Participating TO shall coordinate with the Interconnection Customer using Good Utility Practice to schedule the reduction or disconnection during periods of least impact to the Interconnection Customer and the CAISO and Participating TO. Any reduction or disconnection shall continue only for so long as reasonably necessary under Good Utility Practice. The Parties shall cooperate with each other to restore the Large Generating Facility, the Interconnection Facilities, and the CAISO Controlled Grid to their normal operating state as soon as practicable consistent with Good Utility Practice.

13.6 Interconnection Customer Authority. Consistent with Good Utility Practice, this LGIA, and the CAISO Tariff, the Interconnection Customer may take actions or inactions with regard to the Large Generating Facility or the Interconnection Customer's Interconnection Facilities during an Emergency Condition in order to (i) preserve public health and safety, (ii) preserve the reliability of the Large Generating Facility or the Interconnection Customer's Interconnection Facilities, (iii) limit or prevent damage, and (iv) expedite restoration of service. Interconnection Customer shall use Reasonable Efforts to minimize the effect of such actions or inactions on the CAISO Controlled Grid and the Participating TO's Interconnection Facilities. The CAISO and Participating TO shall use Reasonable Efforts to assist Interconnection Customer in such actions.

13.7 Limited Liability. Except as otherwise provided in Article 11.6.1 of this LGIA, no Party shall be liable to any other Party for any action it takes in responding to an Emergency Condition so long as such action is made in good faith and is consistent with Good Utility Practice.

ARTICLE 14. REGULATORY REQUIREMENTS AND GOVERNING LAW

14.1 Regulatory Requirements. Each Party's obligations under this LGIA shall be subject to its receipt of any required approval or certificate from one or more Governmental Authorities in the form and substance satisfactory to the applying Party, or the Party making any required filings with, or providing notice to, such Governmental Authorities, and the expiration of any time period associated therewith. Each Party shall in good faith seek and use its Reasonable Efforts to obtain such other approvals. Nothing in this LGIA shall require the Interconnection Customer to take any action that could result in its inability to obtain, or its loss of, status or exemption under the Federal Power Act or the

Public Utility Holding Company Act of 1935, as amended, or the Public Utility Regulatory Policies Act of 1978, or the Energy Policy Act of 2005.

14.2 Governing Law.

14.2.1 The validity, interpretation and performance of this LGIA and each of its provisions shall be governed by the laws of the state where the Point of Interconnection is located, without regard to its conflicts of law principles.

14.2.2 This LGIA is subject to all Applicable Laws and Regulations.

14.2.3 Each Party expressly reserves the right to seek changes in, appeal, or otherwise contest any laws, orders, rules, or regulations of a Governmental Authority.

ARTICLE 15. NOTICES

15.1 General. Unless otherwise provided in this LGIA, any notice, demand or request required or permitted to be given by a Party to another and any instrument required or permitted to be tendered or delivered by a Party in writing to another shall be effective when delivered and may be so given, tendered or delivered, by recognized national courier, or by depositing the same with the United States Postal Service with postage prepaid, for delivery by certified or registered mail, addressed to the Party, or personally delivered to the Party, at the address set out in Appendix F, Addresses for Delivery of Notices and Billings.

A Party must update the information in Appendix F as information changes. A Party may change the notice information in this LGIA by giving five (5) Business Days written notice prior to the effective date of the change. Such changes shall not constitute an amendment to this LGIA.

15.2 Billings and Payments. Billings and payments shall be sent to the addresses set out in Appendix F.

15.3 Alternative Forms of Notice. Any notice or request required or permitted to be given by a Party to another and not required by this LGIA to be given in writing may be so given by telephone, facsimile or e-mail to the telephone numbers and e-mail addresses set out in Appendix F.

15.4 Operations and Maintenance Notice. Each Party shall notify the other Parties in writing of the identity of the person(s) that it designates as the point(s) of contact with respect to the implementation of Articles 9 and 10.

ARTICLE 16. FORCE MAJEURE

16.1 Force Majeure.

16.1.1 Economic hardship is not considered a Force Majeure event.

16.1.2 No Party shall be considered to be in Default with respect to any obligation hereunder, (including obligations under Article 4), other than the obligation to pay money when due, if prevented from fulfilling such obligation by Force Majeure. A Party unable to fulfill any obligation hereunder (other than an obligation to pay money when due) by reason of Force Majeure shall give notice and the full particulars of such Force Majeure to the other Party in writing or by telephone as soon as reasonably possible after the occurrence of the cause relied upon. Telephone notices given pursuant to this Article shall be confirmed in writing as soon as reasonably possible and shall specifically state full particulars of the Force Majeure, the time and date when the Force Majeure occurred and when the Force Majeure is reasonably expected to cease. The Party affected shall exercise due diligence to remove such disability with reasonable dispatch, but shall not be required to accede or agree to any provision not satisfactory to it in order to settle and terminate a strike or other labor disturbance.

ARTICLE 17. DEFAULT

17.1 Default

17.1.1 General. No Default shall exist where such failure to discharge an obligation (other than the payment of money) is the result of Force Majeure as defined in this LGIA or the result of an act or omission of the other Party. Upon a Breach, the affected non-Breaching Party(ies) shall give written notice of such Breach to the Breaching Party. Except as provided in Article 17.1.2, the Breaching Party shall have thirty (30) Calendar Days from receipt of the Default notice within which to cure such Breach; provided however, if such Breach is not capable of cure within thirty (30) Calendar Days, the Breaching Party shall commence such cure within thirty (30) Calendar Days after notice and continuously and diligently complete such cure within ninety (90) Calendar Days from receipt of the Default notice; and, if cured within such time, the Breach specified in such notice shall cease to exist.

17.1.2 Right to Terminate. If a Breach is not cured as provided in this Article, or if a Breach is not capable of being cured within the period provided for herein, the affected non-Breaching Party(ies) shall have the right to declare a Default and terminate this LGIA by written notice at any time until cure occurs, and be relieved of any further obligation hereunder and,

whether or not such Party(ies) terminates this LGIA, to recover from the Breaching Party all amounts due hereunder, plus all other damages and remedies to which it is entitled at law or in equity. The provisions of this Article will survive termination of this LGIA.

ARTICLE 18. INDEMNITY, CONSEQUENTIAL DAMAGES AND INSURANCE

18.1 Indemnity. Each Party shall at all times indemnify, defend, and hold the other Parties harmless from, any and all Losses arising out of or resulting from another Party's action or inactions of its obligations under this LGIA on behalf of the indemnifying Party, except in cases of gross negligence or intentional wrongdoing by the Indemnified Party.

18.1.1 Indemnified Party. If an Indemnified Party is entitled to indemnification under this Article 18 as a result of a claim by a third party, and the Indemnifying Party fails, after notice and reasonable opportunity to proceed under Article 18.1, to assume the defense of such claim, such Indemnified Party may at the expense of the Indemnifying Party contest, settle or consent to the entry of any judgment with respect to, or pay in full, such claim.

18.1.2 Indemnifying Party. If an Indemnifying Party is obligated to indemnify and hold any Indemnified Party harmless under this Article 18, the amount owing to the Indemnified Party shall be the amount of such Indemnified Party’s actual Loss, net of any insurance or other recovery.

18.1.3 Indemnity Procedures. Promptly after receipt by an Indemnified Party of any claim or notice of the commencement of any action or administrative or legal proceeding or investigation as to which the indemnity provided for in Article 18.1 may apply, the Indemnified Party shall notify the Indemnifying Party of such fact. Any failure of or delay in such notification shall not affect a Party's indemnification obligation unless such failure or delay is materially prejudicial to the indemnifying Party.

The Indemnifying Party shall have the right to assume the defense thereof with counsel designated by such Indemnifying Party and reasonably satisfactory to the Indemnified Party. If the defendants in any such action include one or more Indemnified Parties and the Indemnifying Party and if the Indemnified Party reasonably concludes that there may be legal defenses available to it and/or other Indemnified Parties which are different from or additional to those available to the Indemnifying Party, the Indemnified Party shall have the right to select separate counsel to assert such legal defenses and to otherwise participate in the defense of such action on its own behalf. In such instances, the Indemnifying Party shall only be required to pay the fees and expenses of one

additional attorney to represent an Indemnified Party or Indemnified Parties having such differing or additional legal defenses.

The Indemnified Party shall be entitled, at its expense, to participate in any such action, suit or proceeding, the defense of which has been assumed by the Indemnifying Party. Notwithstanding the foregoing, the Indemnifying Party (i) shall not be entitled to assume and control the defense of any such action, suit or proceedings if and to the extent that, in the opinion of the Indemnified Party and its counsel, such action, suit or proceeding involves the potential imposition of criminal liability on the Indemnified Party, or there exists a conflict or adversity of interest between the Indemnified Party and the Indemnifying Party, in such event the Indemnifying Party shall pay the reasonable expenses of the Indemnified Party, and (ii) shall not settle or consent to the entry of any judgment in any action, suit or proceeding without the consent of the Indemnified Party, which shall not be unreasonably withheld, conditioned or delayed.

18.2 Consequential Damages. Other than the liquidated damages heretofore described in Article 5.3, in no event shall any Party be liable under any provision of this LGIA for any losses, damages, costs or expenses for any special, indirect, incidental, consequential, or punitive damages, including but not limited to loss of profit or revenue, loss of the use of equipment, cost of capital, cost of temporary equipment or services, whether based in whole or in part in contract, in tort, including negligence, strict liability, or any other theory of liability; provided, however, that damages for which a Party may be liable to another Party under another agreement will not be considered to be special, indirect, incidental, or consequential damages hereunder.

18.3 Insurance. Each Party shall, at its own expense, maintain in force throughout the period of this LGIA, and until released by the other Parties, the following minimum insurance coverages, with insurers rated no less than A- (with a minimum size rating of VII) by Bests' Insurance Guide and Key Ratings and authorized to do business in the state where the Point of Interconnection is located, except in the case of the CAISO, the State of California:

18.3.1 Employer's Liability and Workers' Compensation Insurance providing statutory benefits in accordance with the laws and regulations of the state in which the Point of Interconnection is located, except in the case of the CAISO, the State of California.

18.3.2 Commercial General Liability Insurance including premises and operations, personal injury, broad form property damage, broad form blanket contractual liability coverage (including coverage for the contractual indemnification) products and completed operations coverage, coverage for explosion, collapse and underground hazards,

independent contractors coverage, coverage for pollution to the extent normally available and punitive damages to the extent normally available and a cross liability endorsement, with minimum limits of One Million Dollars ($1,000,000) per occurrence/One Million Dollars ($1,000,000) aggregate combined single limit for personal injury, bodily injury, including death and property damage.

18.3.3 Business Automobile Liability Insurance for coverage of owned and non-owned and hired vehicles, trailers or semi-trailers designed for travel on public roads, with a minimum, combined single limit of One Million Dollars ($1,000,000) per occurrence for bodily injury, including death, and property damage.

18.3.4 Excess Public Liability Insurance over and above the Employer's Liability Commercial General Liability and Business Automobile Liability Insurance coverage, with a minimum combined single limit of Twenty Million Dollars ($20,000,000) per occurrence/Twenty Million Dollars ($20,000,000) aggregate.

18.3.5 The Commercial General Liability Insurance, Business Automobile Insurance and Excess Public Liability Insurance policies shall name the other Parties, their parents, associated and Affiliate companies and their respective directors, officers, agents, servants and employees ("Other Party Group") as additional insured. All policies shall contain provisions whereby the insurers waive all rights of subrogation in accordance with the provisions of this LGIA against the Other Party Group and provide thirty (30) Calendar Days advance written notice to the Other Party Group prior to anniversary date of cancellation or any material change in coverage or condition.

18.3.6 The Commercial General Liability Insurance, Business Automobile Liability Insurance and Excess Public Liability Insurance policies shall contain provisions that specify that the policies are primary and shall apply to such extent without consideration for other policies separately carried and shall state that each insured is provided coverage as though a separate policy had been issued to each, except the insurer’s liability shall not be increased beyond the amount for which the insurer would have been liable had only one insured been covered. Each Party shall be responsible for its respective deductibles or retentions.

18.3.7 The Commercial General Liability Insurance, Business Automobile Liability Insurance and Excess Public Liability Insurance policies, if written on a Claims First Made Basis, shall be maintained in full force and effect for two (2) years after termination of this LGIA, which coverage may be in the form of tail coverage or extended reporting period coverage if agreed by the Parties.

18.3.8 The requirements contained herein as to the types and limits of all insurance to be maintained by the Parties are not intended to and shall not in any manner, limit or qualify the liabilities and obligations assumed by the Parties under this LGIA.

18.3.9 Within ten (10) Calendar Days following execution of this LGIA, and as soon as practicable after the end of each fiscal year or at the renewal of the insurance policy and in any event within ninety (90) Calendar Days thereafter, each Party shall provide certification of all insurance required in this LGIA, executed by each insurer or by an authorized representative of each insurer.

18.3.10 Notwithstanding the foregoing, each Party may self-insure to meet the minimum insurance requirements of Articles 18.3.2 through 18.3.8 to the extent it maintains a self-insurance program; provided that, such Party's senior unsecured debt or issuer rating is BBB-, or better, as rated by Standard & Poor's and that its self-insurance program meets the minimum insurance requirements of Articles 18.3.2 through 18.3.8. For any period of time that a Party's senior unsecured debt rating and issuer rating are both unrated by Standard & Poor's or are both rated at less than BBB- by Standard & Poor's, such Party shall comply with the insurance requirements applicable to it under Articles 18.3.2 through 18.3.9. In the event that a Party is permitted to self-insure pursuant to this Article 18.3.10, it shall notify the other Parties that it meets the requirements to self-insure and that its self-insurance program meets the minimum insurance requirements in a manner consistent with that specified in Article 18.3.9.

18.3.11 The Parties agree to report to each other in writing as soon as practical all accidents or occurrences resulting in injuries to any person, including death, and any property damage arising out of this LGIA.

ARTICLE 19. ASSIGNMENT

19.1 **Assignment**. This LGIA may be assigned by a Party only with the written consent of the other Parties; provided that a Party may assign this LGIA without the consent of the other Parties to any Affiliate of the assigning Party with an equal or greater credit rating and with the legal authority and operational ability to satisfy the obligations of the assigning Party under this LGIA; and provided further that the Interconnection Customer shall have the right to assign this LGIA, without the consent of the CAISO or Participating TO, for collateral security purposes to aid in providing financing for the Large Generating Facility, provided that the Interconnection Customer will promptly notify the CAISO and Participating TO of any such assignment. Any financing arrangement entered

into by the Interconnection Customer pursuant to this Article will provide that prior to or upon the exercise of the secured party's, trustee's or mortgagee's assignment rights pursuant to said arrangement, the secured creditor, the trustee or mortgagee will notify the CAISO and Participating TO of the date and particulars of any such exercise of assignment right(s), including providing the CAISO and Participating TO with proof that it meets the requirements of Articles 11.5 and 18.3. Any attempted assignment that violates this Article is void and ineffective. Any assignment under this LGIA shall not relieve a Party of its obligations, nor shall a Party's obligations be enlarged, in whole or in part, by reason thereof. Where required, consent to assignment will not be unreasonably withheld, conditioned or delayed.

ARTICLE 20. SEVERABILITY

20.1 Severability. If any provision in this LGIA is finally determined to be invalid, void or unenforceable by any court or other Governmental Authority having jurisdiction, such determination shall not invalidate, void or make unenforceable any other provision, agreement or covenant of this LGIA; provided that if the Interconnection Customer (or any third party, but only if such third party is not acting at the direction of the Participating TO or CAISO) seeks and obtains such a final determination with respect to any provision of the Alternate Option (Article 5.1.2), or the Negotiated Option (Article 5.1.4), then none of the provisions of Article 5.1.2 or 5.1.4 shall thereafter have any force or effect and the Parties' rights and obligations shall be governed solely by the Standard Option (Article 5.1.1).

ARTICLE 21. COMPARABILITY

21.1 Comparability. The Parties will comply with all applicable comparability and code of conduct laws, rules and regulations, as amended from time to time.

ARTICLE 22. CONFIDENTIALITY

22.1 Confidentiality. Confidential Information shall include, without limitation, all information relating to a Party's technology, research and development, business affairs, and pricing, and any information supplied by any of the Parties to the other Parties prior to the execution of this LGIA.

Information is Confidential Information only if it is clearly designated or marked in writing as confidential on the face of the document, or, if the information is conveyed orally or by inspection, if the Party providing the information orally informs the Parties receiving the information that the information is confidential.

If requested by any Party, the other Parties shall provide in writing, the basis for asserting that the information referred to in this Article 22 warrants confidential treatment, and the requesting Party
may disclose such writing to the appropriate Governmental Authority. Each Party shall be responsible for the costs associated with affording confidential treatment to its information.

22.1.1 Term. During the term of this LGIA, and for a period of three (3) years after the expiration or termination of this LGIA, except as otherwise provided in this Article 22, each Party shall hold in confidence and shall not disclose to any person Confidential Information.

22.1.2 Scope. Confidential Information shall not include information that the receiving Party can demonstrate: (1) is generally available to the public other than as a result of a disclosure by the receiving Party; (2) was in the lawful possession of the receiving Party on a non-confidential basis before receiving it from the disclosing Party; (3) was supplied to the receiving Party without restriction by a third party, who, to the knowledge of the receiving Party after due inquiry, was under no obligation to the disclosing Party to keep such information confidential; (4) was independently developed by the receiving Party without reference to Confidential Information of the disclosing Party; (5) is, or becomes, publicly known, through no wrongful act or omission of the receiving Party or Breach of this LGIA; or (6) is required, in accordance with Article 22.1.7 of this LGIA, Order of Disclosure, to be disclosed by any Governmental Authority or is otherwise required to be disclosed by law or subpoena, or is necessary in any legal proceeding establishing rights and obligations under this LGIA. Information designated as Confidential Information will no longer be deemed confidential if the Party that designated the information as confidential notifies the other Parties that it no longer is confidential.

22.1.3 Release of Confidential Information. No Party shall release or disclose Confidential Information to any other person, except to its employees, consultants, Affiliates (limited by the Standards of Conduct requirements set forth in Part 358 of FERC's Regulations, 18 C.F.R. 358), subcontractors, or to parties who may be or considering providing financing to or equity participation with the Interconnection Customer, or to potential purchasers or assignees of the Interconnection Customer, on a need-to-know basis in connection with this LGIA, unless such person has first been advised of the confidentiality provisions of this Article 22 and has agreed to comply with such provisions. Notwithstanding the foregoing, a Party providing Confidential Information to any person shall remain primarily responsible for any release of Confidential Information in contravention of this Article 22.

22.1.4 Rights. Each Party retains all rights, title, and interest in the Confidential Information that each Party discloses to the other Parties. The disclosure by each Party to the other Parties of Confidential Information shall not be deemed a waiver by a Party or any other person or entity of the right to protect the Confidential Information from public disclosure.

22.1.5 No Warranties. The mere fact that a Party has provided Confidential Information does not constitute a warranty or representation as to its accuracy or completeness. In addition, by supplying Confidential Information, no Party obligates itself to provide any particular information or Confidential Information to the other Parties nor to enter into any further agreements or proceed with any other relationship or joint venture.

22.1.6 Standard of Care. Each Party shall use at least the same standard of care to protect Confidential Information it receives as it uses to protect its own Confidential Information from unauthorized disclosure, publication or dissemination. Each Party may use Confidential Information solely to fulfill its obligations to the other Parties under this LGIA or its regulatory requirements.

22.1.7 Order of Disclosure. If a court or a Government Authority or entity with the right, power, and apparent authority to do so requests or requires any Party, by subpoena, oral
deposition, interrogatories, requests for production of documents, administrative order, or otherwise, to disclose Confidential Information, that Party shall provide the other Parties with prompt notice of such request(s) or requirement(s) so that the other Parties may seek an appropriate protective order or waive compliance with the terms of this LGIA. Notwithstanding the absence of a protective order or waiver, the Party may disclose such Confidential Information which, in the opinion of its counsel, the Party is legally compelled to disclose. Each Party will use Reasonable Efforts to obtain reliable assurance that confidential treatment will be accorded any Confidential Information so furnished.

22.1.8 Termination of Agreement. Upon termination of this LGIA for any reason, each Party shall, within ten (10) Calendar Days of receipt of a written request from another Party, use Reasonable Efforts to destroy, erase, or delete (with such destruction, erasure, and deletion certified in writing to the other Party) or return to the other Party, without retaining copies thereof, any and all written or electronic Confidential Information received from the other Party.

22.1.9 Remedies. The Parties agree that monetary damages would be inadequate to compensate a Party for another Party's Breach of its obligations under this Article 22. Each Party accordingly agrees that the other Parties shall be entitled to equitable relief, by way of injunction or

otherwise, if the first Party Breaches or threatens to Breach its obligations under this Article 22, which equitable relief shall be granted without bond or proof of damages, and the receiving Party shall not plead in defense that there would be an adequate remedy at law. Such remedy shall not be deemed an exclusive remedy for the Breach of this Article 22, but shall be in addition to all other remedies available at law or in equity. The Parties further acknowledge and agree that the covenants contained herein are necessary for the protection of legitimate business interests and are reasonable in scope. No Party, however, shall be liable for indirect, incidental, or consequential or punitive damages of any nature or kind resulting from or arising in connection with this Article 22.

22.1.10 Disclosure to FERC, its Staff, or a State. Notwithstanding anything in this Article 22 to the contrary, and pursuant to 18 C.F.R. section 1b.20, if FERC or its staff, during the course of an investigation or otherwise, requests information from one of the Parties that is otherwise required to be maintained in confidence pursuant to this LGIA, the Party shall provide the requested information to FERC or its staff, within the time provided for in the request for information. In providing the information to FERC or its staff, the Party must, consistent with 18 C.F.R. section 388.112, request that the information be treated as confidential and non-public by FERC and its staff and that the information be withheld from public disclosure. Parties are prohibited from notifying the other Parties to this LGIA prior to the release of the Confidential Information to FERC or its staff. The Party shall notify the other Parties to the LGIA when it is notified by FERC or its staff that a request to release Confidential Information has been received by FERC, at which time any of the Parties may respond before such information would be made public, pursuant to 18 C.F.R. Section 388.112. Requests from a state regulatory body conducting a confidential investigation shall be treated in a similar manner if consistent with the applicable state rules and regulations.

22.1.11 Subject to the exception in Article 22.1.10, Confidential Information shall not be disclosed by the other Parties to any person not employed or retained by the other Parties, except to the extent disclosure is (i) required by law; (ii) reasonably deemed by the disclosing Party to be required to be disclosed in connection with a dispute between or among the Parties, or the defense of litigation or dispute; (iii) otherwise permitted by consent of the other Parties, such consent not to be unreasonably withheld; or (iv) necessary to fulfill its obligations under this LGIA or as a transmission service provider or a Balancing Authority including disclosing the Confidential Information to an RTO or ISO or to a regional or national reliability organization. The Party asserting confidentiality shall notify the other Parties in writing of the information it claims is confidential. Prior to any disclosures of another Party's Confidential Information under this subparagraph, or if any third party or Governmental Authority makes any

request or demand for any of the information described in this subparagraph, the disclosing Party agrees to promptly notify the other Party in writing and agrees to assert confidentiality and cooperate with the other Party in seeking to protect the Confidential Information from public disclosure by confidentiality agreement, protective order or other reasonable measures.

ARTICLE 23. ENVIRONMENTAL RELEASES

23.1 Each Party shall notify the other Parties, first orally and then in writing, of the release of any Hazardous Substances, any asbestos or lead abatement activities, or any type of remediation activities related to the Large Generating Facility or the Interconnection Facilities, each of which may reasonably be expected to affect the other Parties. The notifying Party shall: (i) provide the notice as soon as practicable, provided such Party makes a good faith effort to provide the notice no later than twenty-four hours after such Party becomes aware of the occurrence; and (ii) promptly furnish to the other Parties copies of any publicly available reports filed with any Governmental Authorities addressing such events.

ARTICLE 24. INFORMATION REQUIREMENTS

24.1 **Information Acquisition**. The Participating TO and the Interconnection Customer shall submit specific information regarding the electrical characteristics of their respective facilities to each other as described below and in accordance with Applicable Reliability Standards.

24.2 **Information Submission by Participating TO**. The initial information submission by the Participating TO shall occur no later than one hundred eighty (180) Calendar Days prior to Trial Operation and shall include the Participating TO's Transmission System information necessary to allow the Interconnection Customer to select equipment and meet any system protection and stability requirements, unless otherwise agreed to by the Participating TO and the Interconnection Customer. On a monthly basis the Participating TO shall provide the Interconnection Customer and the CAISO a status report on the construction and installation of the Participating TO's Interconnection Facilities and Network Upgrades, including, but not limited to, the following information: (1) progress to date; (2) a description of the activities since the last report; (3) a description of the action items for the next period; and (4) the delivery status of equipment ordered.

24.3 **Updated Information Submission by Interconnection Customer**. The updated information submission by the Interconnection Customer, including manufacturer information, shall occur no later than one hundred eighty (180)

Calendar Days prior to the Trial Operation. The Interconnection Customer shall submit a completed copy of the Electric Generating Unit data requirements contained in Appendix 1 to the LGIP. It shall also include any additional information provided to the Participating TO and the CAISO for the Interconnection Studies. Information in this submission shall be the most current Electric Generating Unit design or expected performance data. Information submitted for stability models shall be compatible with the Participating TO and CAISO standard models. If there is no compatible model, the Interconnection Customer will work with a consultant mutually agreed to by the Parties to develop and supply a standard model and associated information.

If the Interconnection Customer's data is materially different from what was originally provided to the Participating TO and the CAISO for the Interconnection Studies, then the Participating TO and the CAISO will conduct appropriate studies pursuant to the LGIP to determine the impact on the Participating TO's Transmission System and affected portions of the CAISO Controlled Grid based on the actual data submitted pursuant to this Article 24.3. The Interconnection Customer shall not begin Trial Operation until such studies are completed and all other requirements of this LGIA are satisfied.

24.4 Information Supplementation. Prior to the Trial Operation date, the Parties shall supplement their information submissions described above in this Article 24 with any and all "as-built" Electric Generating Unit information or "as-tested" performance information that differs from the initial submissions or, alternatively, written confirmation that no such differences exist. The Interconnection Customer shall conduct tests on the Electric Generating Unit as required by Good Utility Practice such as an open circuit "step voltage" test on the Electric Generating Unit to verify proper operation of the Electric Generating Unit's automatic voltage regulator.

Unless otherwise agreed, the test conditions shall include: (1) Electric Generating Unit at synchronous speed; (2) automatic voltage regulator on and in voltage control mode; and (3) a five percent (5 percent) change in Electric Generating Unit terminal voltage initiated by a change in the voltage regulators reference voltage. The Interconnection Customer shall provide validated test recordings showing the responses of Electric Generating Unit terminal and field voltages. In the event that direct recordings of these voltages is impractical, recordings of other voltages or currents that mirror the response of the Electric Generating Unit's terminal or field voltage are acceptable if information necessary to translate these alternate quantities to actual Electric Generating Unit terminal or field voltages is provided. Electric Generating Unit testing shall be conducted and results provided to the Participating TO and the CAISO for each individual Electric Generating Unit in a station.

Subsequent to the Commercial Operation Date, the Interconnection Customer shall provide the Participating TO and the CAISO any information changes due to

equipment replacement, repair, or adjustment. The Participating TO shall provide the Interconnection Customer any information changes due to equipment replacement, repair or adjustment in the directly connected substation or any adjacent Participating TO-owned substation that may affect the Interconnection Customer's Interconnection Facilities equipment ratings, protection or operating requirements. The Parties shall provide such information pursuant to Article 5.19.

ARTICLE 25. INFORMATION ACCESS AND AUDIT RIGHTS

25.1 Information Access. Each Party (the "disclosing Party") shall make available to the other Party information that is in the possession of the disclosing Party and is necessary in order for the other Party to: (i) verify the costs incurred by the disclosing Party for which the other Party is responsible under this LGIA; and (ii) carry out its obligations and responsibilities under this LGIA. The Parties shall not use such information for purposes other than those set forth in this Article 25.1 and to enforce their rights under this LGIA. Nothing in this Article 25 shall obligate the CAISO to make available to a Party any third party information in its possession or control if making such third party information available would violate a CAISO Tariff restriction on the use or disclosure of such third party information.

25.2 Reporting of Non-Force Majeure Events. Each Party (the "notifying Party") shall notify the other Parties when the notifying Party becomes aware of its inability to comply with the provisions of this LGIA for a reason other than a Force Majeure event. The Parties agree to cooperate with each other and provide necessary information regarding such inability to comply, including the date, duration, reason for the inability to comply, and corrective actions taken or planned to be taken with respect to such inability to comply. Notwithstanding the foregoing, notification, cooperation or information provided under this Article shall not entitle the Party receiving such notification to allege a cause for anticipatory breach of this LGIA.

25.3 Audit Rights. Subject to the requirements of confidentiality under Article 22 of this LGIA, the Parties' audit rights shall include audits of a Party's costs pertaining to such Party's performance or satisfaction of obligations owed to the other Party under this LGIA, calculation of invoiced amounts, the CAISO's efforts to allocate responsibility for the provision of reactive support to the CAISO Controlled Grid, the CAISO's efforts to allocate responsibility for interruption or reduction of generation on the CAISO Controlled Grid, and each such Party's actions in an Emergency Condition.

25.3.1 The Interconnection Customer and the Participating TO shall each have the right, during normal business hours, and upon prior reasonable notice to the other Party, to audit at its own expense the other Party's accounts

and records pertaining to either such Party's performance or either such Party's satisfaction of obligations owed to the other Party under this LGIA. Subject to Article 25.3.2, any audit authorized by this Article shall be performed at the offices where such accounts and records are maintained and shall be limited to those portions of such accounts and records that relate to each such Party's performance and satisfaction of obligations under this LGIA. Each such Party shall keep such accounts and records for a period equivalent to the audit rights periods described in Article 25.4.

25.3.2 Notwithstanding anything to the contrary in Article 25.3, each Party's rights to audit the CAISO's accounts and records shall be as set forth in Section 22.1 of the CAISO Tariff.

25.4 Audit Rights Periods.

25.4.1 Audit Rights Period for Construction-Related Accounts and Records. Accounts and records related to the design, engineering, procurement, and construction of Participating TO's Interconnection Facilities, Network Upgrades, and Distribution Upgrades constructed by the Participating TO shall be subject to audit for a period of twenty-four months following the Participating TO's issuance of a final invoice in accordance with Article 12.2. Accounts and records related to the design, engineering, procurement, and construction of Participating TO's Interconnection Facilities and/or Stand Alone Network Upgrades constructed by the Interconnection Customer shall be subject to audit and verification by the Participating TO and the CAISO for a period of twenty-four months following the Interconnection Customer's issuance of a final invoice in accordance with Article 5.2(8).

25.4.2 Audit Rights Period for All Other Accounts and Records. Accounts and records related to a Party's performance or satisfaction of all obligations under this LGIA other than those described in Article 25.4.1 shall be subject to audit as follows: (i) for an audit relating to cost obligations, the applicable audit rights period shall be twenty-four months after the auditing Party's receipt of an invoice giving rise to such cost obligations; and (ii) for an audit relating to all other obligations, the applicable audit rights period shall be twenty-four months after the event for which the audit is sought; provided that each Party's rights to audit the CAISO's accounts and records shall be as set forth in Section 22.1 of the CAISO Tariff.

25.5 Audit Results. If an audit by the Interconnection Customer or the Participating TO determines that an overpayment or an underpayment has occurred with respect to the other Party, a notice of such overpayment or underpayment shall be given to the other Party together with those records from the audit which supports such determination. The Party that is owed payment shall render an

invoice to the other Party and such invoice shall be paid pursuant to Article 12 hereof.

25.5.1 Notwithstanding anything to the contrary in Article 25.5, the Interconnection Customer's and Participating TO's rights to audit the CAISO's accounts and records shall be as set forth in Section 22.1 of the CAISO Tariff, and the CAISO's process for remedying an overpayment or underpayment shall be as set forth in the CAISO Tariff.

ARTICLE 26. SUBCONTRACTORS

26.1 General. Nothing in this LGIA shall prevent a Party from utilizing the services of any subcontractor as it deems appropriate to perform its obligations under this LGIA; provided, however, that each Party shall require its subcontractors to comply with all applicable terms and conditions of this LGIA in providing such services and each Party shall remain primarily liable to the other Party for the performance of such subcontractor.

26.2 Responsibility of Principal. The creation of any subcontract relationship shall not relieve the hiring Party of any of its obligations under this LGIA. The hiring Party shall be fully responsible to the other Parties for the acts or omissions of any subcontractor the hiring Party hires as if no subcontract had been made; provided, however, that in no event shall the CAISO or Participating TO be liable for the actions or inactions of the Interconnection Customer or its subcontractors with respect to obligations of the Interconnection Customer under Article 5 of this LGIA. Any applicable obligation imposed by this LGIA upon the hiring Party shall be equally binding upon, and shall be construed as having application to, any subcontractor of such Party.

26.3 No Limitation by Insurance. The obligations under this Article 26 will not be limited in any way by any limitation of subcontractor's insurance.

ARTICLE 27. DISPUTES

All disputes arising out of or in connection with this LGIA whereby relief is sought by or from the CAISO shall be settled in accordance with the provisions of Article 13 of the CAISO Tariff, except that references to the CAISO Tariff in such Article 13 of the CAISO Tariff shall be read as references to this LGIA. Disputes arising out of or in connection with this LGIA not subject to provisions of Article 13 of the CAISO Tariff shall be resolved as follows:

27.1 Submission. In the event either Party has a dispute, or asserts a claim, that arises out of or in connection with this LGIA or its performance, such Party (the "disputing Party") shall provide the other Party with written notice of the dispute

or claim ("Notice of Dispute"). Such dispute or claim shall be referred to a designated senior representative of each Party for resolution on an informal basis as promptly as practicable after receipt of the Notice of Dispute by the other Party. In the event the designated representatives are unable to resolve the claim or dispute through unassisted or assisted negotiations within thirty (30) Calendar Days of the other Party's receipt of the Notice of Dispute, such claim or dispute may, upon mutual agreement of the Parties, be submitted to arbitration and resolved in accordance with the arbitration procedures set forth below. In the event the Parties do not agree to submit such claim or dispute to arbitration, each Party may exercise whatever rights and remedies it may have in equity or at law consistent with the terms of this LGIA.

27.2 External Arbitration Procedures. Any arbitration initiated under this LGIA shall be conducted before a single neutral arbitrator appointed by the Parties. If the Parties fail to agree upon a single arbitrator within ten (10) Calendar Days of the submission of the dispute to arbitration, each Party shall choose one arbitrator who shall sit on a three-member arbitration panel. The two arbitrators so chosen shall within twenty (20) Calendar Days select a third arbitrator to chair the arbitration panel. In either case, the arbitrators shall be knowledgeable in electric utility matters, including electric transmission and bulk power issues, and shall not have any current or past substantial business or financial relationships with any party to the arbitration (except prior arbitration). The arbitrator(s) shall provide each of the Parties an opportunity to be heard and, except as otherwise provided herein, shall conduct the arbitration in accordance with the Commercial Arbitration Rules of the American Arbitration Association ("Arbitration Rules") and any applicable FERC regulations; provided, however, in the event of a conflict between the Arbitration Rules and the terms of this Article 27, the terms of this Article 27 shall prevail.

27.3 Arbitration Decisions. Unless otherwise agreed by the Parties, the arbitrator(s) shall render a decision within ninety (90) Calendar Days of appointment and shall notify the Parties in writing of such decision and the reasons therefor. The arbitrator(s) shall be authorized only to interpret and apply the provisions of this LGIA and shall have no power to modify or change any provision of this Agreement in any manner. The decision of the arbitrator(s) shall be final and binding upon the Parties, and judgment on the award may be entered in any court having jurisdiction. The decision of the arbitrator(s) may be appealed solely on the grounds that the conduct of the arbitrator(s), or the decision itself, violated the standards set forth in the Federal Arbitration Act or the Administrative Dispute Resolution Act. The final decision of the arbitrator must also be filed with FERC if it affects jurisdictional rates, terms and conditions of service, Interconnection Facilities, or Network Upgrades.

27.4 Costs. Each Party shall be responsible for its own costs incurred during the arbitration process and for the following costs, if applicable: (1) the cost of the arbitrator chosen by the Party to sit on the three member panel and one half of

the cost of the third arbitrator chosen; or (2) one half the cost of the single arbitrator jointly chosen by the Parties.

ARTICLE 28. REPRESENTATIONS, WARRANTIES AND COVENANTS

28.1 General. Each Party makes the following representations, warranties and covenants:

28.1.1 Good Standing. Such Party is duly organized, validly existing and in good standing under the laws of the state in which it is organized, formed, or incorporated, as applicable; that it is qualified to do business in the state or states in which the Large Generating Facility, Interconnection Facilities and Network Upgrades owned by such Party, as applicable, are located; and that it has the corporate power and authority to own its properties, to carry on its business as now being conducted and to enter into this LGIA and carry out the transactions contemplated hereby and perform and carry out all covenants and obligations on its part to be performed under and pursuant to this LGIA.

28.1.2 Authority. Such Party has the right, power and authority to enter into this LGIA, to become a Party hereto and to perform its obligations hereunder. This LGIA is a legal, valid and binding obligation of such Party, enforceable against such Party in accordance with its terms, except as the enforceability thereof may be limited by applicable bankruptcy, insolvency, reorganization or other similar laws affecting creditors' rights generally and by general equitable principles (regardless of whether enforceability is sought in a proceeding in equity or at law).

28.1.3 No Conflict. The execution, delivery and performance of this LGIA does not violate or conflict with the organizational or formation documents, or bylaws or operating agreement, of such Party, or any judgment, license, permit, order, material agreement or instrument applicable to or binding upon such Party or any of its assets.

28.1.4 Consent and Approval. Such Party has sought or obtained, or, in accordance with this LGIA will seek or obtain, each consent, approval, authorization, order, or acceptance by any Governmental Authority in connection with the execution, delivery and performance of this LGIA, and it will provide to any Governmental Authority notice of any actions under this LGIA that are required by Applicable Laws and Regulations.

ARTICLE 29. [RESERVED]

ARTICLE 30. MISCELLANEOUS

30.1 Binding Effect. This LGIA and the rights and obligations hereof, shall be binding upon and shall inure to the benefit of the successors and assigns of the Parties hereto.

30.2 Conflicts. In the event of a conflict between the body of this LGIA and any attachment, appendices or exhibits hereto, the terms and provisions of the body of this LGIA shall prevail and be deemed the final intent of the Parties.

30.3 Rules of Interpretation. This LGIA, unless a clear contrary intention appears, shall be construed and interpreted as follows: (1) the singular number includes the plural number and vice versa; (2) reference to any person includes such person's successors and assigns but, in the case of a Party, only if such successors and assigns are permitted by this LGIA, and reference to a person in a particular capacity excludes such person in any other capacity or individually; (3) reference to any agreement (including this LGIA), document, instrument or tariff means such agreement, document, instrument, or tariff as amended or modified and in effect from time to time in accordance with the terms thereof and, if applicable, the terms hereof; (4) reference to any Applicable Laws and Regulations means such Applicable Laws and Regulations as amended, modified, codified, or reenacted, in whole or in part, and in effect from time to time, including, if applicable, rules and regulations promulgated thereunder; (5) unless expressly stated otherwise, reference to any Article, Section or Appendix means such Article of this LGIA or such Appendix to this LGIA, or such Section to the LGIP or such Appendix to the LGIP, as the case may be; (6) "hereunder", "hereof", "herein", "hereto" and words of similar import shall be deemed references to this LGIA as a whole and not to any particular Article or other provision hereof or thereof; (7) "including" (and with correlative meaning "include") means including without limiting the generality of any description preceding such term; and (8) relative to the determination of any period of time, "from" means "from and including", "to" means "to but excluding" and "through" means "through and including".

30.4 Entire Agreement. This LGIA, including all Appendices and Schedules attached hereto, constitutes the entire agreement among the Parties with reference to the subject matter hereof, and supersedes all prior and contemporaneous understandings or agreements, oral or written, between or among the Parties with respect to the subject matter of this LGIA. There are no other agreements, representations, warranties, or covenants which constitute any part of the consideration for, or any condition to, any Party's compliance with its obligations under this LGIA.

30.5 No Third Party Beneficiaries. This LGIA is not intended to and does not create rights, remedies, or benefits of any character whatsoever in favor of any persons, corporations, associations, or entities other than the Parties, and the obligations herein assumed are solely for the use and benefit of the Parties, their successors in interest and, where permitted, their assigns.

30.6 Waiver. The failure of a Party to this LGIA to insist, on any occasion, upon strict performance of any provision of this LGIA will not be considered a waiver of any obligation, right, or duty of, or imposed upon, such Party.

Any waiver at any time by either Party of its rights with respect to this LGIA shall not be deemed a continuing waiver or a waiver with respect to any other failure to comply with any other obligation, right, duty of this LGIA. Termination or Default of this LGIA for any reason by the Interconnection Customer shall not constitute a waiver of the Interconnection Customer's legal rights to obtain an interconnection from the Participating TO. Any waiver of this LGIA shall, if requested, be provided in writing.

30.7 Headings. The descriptive headings of the various Articles of this LGIA have been inserted for convenience of reference only and are of no significance in the interpretation or construction of this LGIA.

30.8 Multiple Counterparts. This LGIA may be executed in two or more counterparts, each of which is deemed an original but all constitute one and the same instrument.

30.9 Amendment. The Parties may by mutual agreement amend this LGIA by a written instrument duly executed by all of the Parties. Such amendment shall become effective and a part of this LGIA upon satisfaction of all Applicable Laws and Regulations.

30.10 Modification by the Parties. The Parties may by mutual agreement amend the Appendices to this LGIA by a written instrument duly executed by all of the Parties. Such amendment shall become effective and a part of this LGIA upon satisfaction of all Applicable Laws and Regulations.

30.11 Reservation of Rights. The CAISO and Participating TO shall each have the right to make a unilateral filing with FERC to modify this LGIA pursuant to section 205 or any other applicable provision of the Federal Power Act and FERC's rules and regulations thereunder with respect to the following Articles of this LGIA and with respect to any rates, terms and conditions, charges, classifications of service, rule or regulation covered by these Articles:

Recitals, 1, 2.1, 2.2, 2.3, 2.4, 2.6, 3.1, 3.3, 4.1, 4.2, 4.3, 4.4, 5 preamble, 5.4, 5.7, 5.8, 5.9, 5.12, 5.13, 5.18, 5.19.1, 7.1, 7.2, 8, 9.1, 9.2, 9.3, 9.5, 9.6, 9.7, 9.8, 9.10, 10.3, 11.4, 12.1, 13, 14, 15, 16, 17, 18, 19, 20, 21, 22,

23, 24.3, 24.4, 25.1, 25.2, 25.3 (excluding subparts), 25.4.2, 26, 28, 29, 30, Appendix D, Appendix F, Appendix G, and any other Article not reserved exclusively to the Participating TO or the CAISO below.

The Participating TO shall have the exclusive right to make a unilateral filing with FERC to modify this LGIA pursuant to section 205 or any other applicable provision of the Federal Power Act and FERC's rules and regulations thereunder with respect to the following Articles of this LGIA and with respect to any rates, terms and conditions, charges, classifications of service, rule or regulation covered by these Articles:

2.5, 5.1, 5.2, 5.3, 5.5, 5.6, 5.10, 5.11, 5.14, 5.15, 5.16, 5.17, 5.19 (excluding 5.19.1), 6, 7.3, 9.4, 9.9, 10.1, 10.2, 10.4, 10.5, 11.1, 11.2, 11.3, 11.5, 12.2, 12.3, 12.4, 24.1, 24.2, 25.3.1, 25.4.1, 25.5 (excluding 25.5.1), 27 (excluding preamble), Appendix A, Appendix B, Appendix C, and Appendix E.

The CAISO shall have the exclusive right to make a unilateral filing with FERC to modify this LGIA pursuant to section 205 or any other applicable provision of the Federal Power Act and FERC's rules and regulations thereunder with respect to the following Articles of this LGIA and with respect to any rates, terms and conditions, charges, classifications of service, rule or regulation covered by these Articles:

3.2, 4.5, 11.6, 25.3.2, 25.5.1, and 27 preamble.

The Interconnection Customer, the CAISO, and the Participating TO shall have the right to make a unilateral filing with FERC to modify this LGIA pursuant to section 206 or any other applicable provision of the Federal Power Act and FERC's rules and regulations thereunder; provided that each Party shall have the right to protest any such filing by another Party and to participate fully in any proceeding before FERC in which such modifications may be considered. Nothing in this LGIA shall limit the rights of the Parties or of FERC under sections 205 or 206 of the Federal Power Act and FERC's rules and regulations thereunder, except to the extent that the Parties otherwise mutually agree as provided herein.

30.12 No Partnership. This LGIA shall not be interpreted or construed to create an association, joint venture, agency relationship, or partnership among the Parties or to impose any partnership obligation or partnership liability upon any Party. No Party shall have any right, power or authority to enter into any agreement or undertaking for, or act on behalf of, or to act as or be an agent or representative of, or to otherwise bind, another Party.

30.13 Joint and Several Obligations. Except as otherwise provided in this LGIA, the obligations of the CAISO, the Participating TO, and the Interconnection Customer are several, and are neither joint nor joint and several.

IN WITNESS WHEREOF, the Parties have executed this LGIA in multiple originals, each of which shall constitute and be an original effective agreement among the Parties.

Southern California Edison Company

By: James A. Kelly

Title: Senior Vice President

Date: _____

California Independent System Operator Corporation

By: _____

Title: _____

Date: _____

Caithness Blythe II, LLC

By: _____

Title: _____

Date: _____

Appendices to LGIA

Appendix A	Interconnection Facilities, Network Upgrades and Distribution Upgrades
Appendix B	Milestones
Appendix C	Interconnection Details
Appendix D	Security Arrangements Details
Appendix E	Commercial Operation Date
Appendix F	Addresses for Delivery of Notices and Billings
Appendix G	Reliability Management System Agreement
Appendix H	Interconnection Requirements for a Wind Generating Plant

Appendix A
To LGIA

Interconnection Facilities, Network Upgrades and Distribution Upgrades

Blythe II and Blythe II Expansion projects listed at position #17 and #219, for 520 MW and 50 MW respectively, in the CAISO Controlled Grid Generation Queue ("CAISO Queue"), comprising a combined cycle Generating Facility with a gross rated output of 570 MW (the "Blythe II Project" as further defined in Appendix C) are proposed to connect to the Colorado River Switchyard @ 500kV.

The Participating TO's Interconnection Facilities, Network Upgrades and Distribution Upgrades described in this Appendix A to the LGIA are initially based on preliminary engineering and design and, consequently, are subject to modification to reflect the actual facilities that are constructed and installed following final engineering and design.

1. Interconnection Facilities:

(a) **Interconnection Customer's Interconnection Facilities:** The Interconnection Customer shall:
- (i) Construct the new Blythe II Project 500kV integration substation comprised of two (2) 500kV circuit breakers, five (5) 500kV disconnect switches and appurtenant equipment
- (ii) Construct the new Blythe II Project Generation Tie Line
- (iii) Install all required CAISO approved metering equipment at the Blythe II Project
- (iv) Install line protection relays at the Blythe II Project end of the Blythe II Project Generation Tie Line, as specified by the Participating TO, expected to include the following relays:
  1. one (1) GE D60 hybrid POTT (digital channel)
  2. one (1) SEL-311 line current differential relay (digital channel)
  3. one (1) GE 90 line current differential relay (digital channel)
  4. two (2) RFL 9745 tele-protection channel DTT's
- (v) Install SPS relays at the Blythe II Project, as specified by the Participating TO, expected to include the following relays:
  1. two (2) GE N60 line monitoring relays
  2. one (1) SEL-2407 satellite synchronized clock
- (vi) Install a optical ground wire ("OPGW") telecommunications circuit on the Blythe II Project Generation Tie Line to support the Blythe II Project Generation Tie Line protection, SPS, and the Remote Terminal Unit ("RTU")

(b) **Participating TO's Interconnection Facilities:** The Participating TO shall**:**
- (i) Install one (1) 500kV dead-end lattice tower inside the Colorado River Switchyard perimeter fence

(ii) Construct two (2) spans of 500kV transmission line between the Point of Change of Ownership and the Point of Interconnection comprised of approximately 6000 ft. of 2-2156KCMIL ACSR conductors, 2000 ft. of OPGW, and nine insulators and hardware dead-end assemblies

(iii) Install one (1) RTU at the Blythe II Project to transmit generator unit gross MW and MVAR, generator status, generator circuit breaker status, generator terminal voltage, and project net MW and MVAR. Notwithstanding that the RTU will be located on Interconnection Customer's side of the Point of Change of Ownership; Participating TO shall own, operate and maintain the RTU as part of the Participating TO's Interconnection Facilities.

(iv) Install an approximate 8 mile fiber optic telecommunications circuit on a pole line between Colorado River Switchyard and the Blythe II Project and related interface equipment to support the line protection relays, SPS relays, and the RTU at the Blythe II Project. Notwithstanding that the fiber optic telecommunications circuit will be located on the Interconnection Customer's side of the Point of Change of Ownership, Participating TO shall own, operate and maintain these facilities as part of the Participating TO's Interconnection Facilities.

(v) Equip position 6 at Colorado River Switchyard as a double breaker line position on a breaker-and-a-half configuration to terminate the Blythe II Project Generation Tie Line, including the following equipment:
1. one (1) dead-end structure (108 ft. high x 90 ft. wide)
2. three (3) 500kV ccvt potential devices
3. three (3) 500kV surge arresters
4. three (3) line tie-downs with 2-2156 KCMIL ACSR conductors

(vi) Install the following relays in the Mechanical Electrical Equipment Room ("MEER") at Colorado River Switchyard;
1. one (1) GE D60 hybrid POTT (digital channel)
2. one (1) SEL-311L line current differential relay (digital channel)
3. one (1) GE 90 line current differential relay (digital channel)
4. two (2) RFL 9745 tele-protection channel DTT's

2. Network Upgrades:

a) Stand Alone Network Upgrades: None.

b) Other Network Upgrades:

(i) **Participating TO's Reliability Network Upgrades:** The Participating TO shall**:**

1. Equip position 6 at Colorado River Switchyard as a double breaker line position on a breaker-and-a-half configuration to terminate the Blythe II Project Generation Tie Line, including the following equipment:
   a. two (2) 500kV – 4000A 0 40kA circuit breakers

b. four (4) 500kV – 4000A horizontal-mounted group-operated disconnect switches, one of them equipped with grounding attachments
c. fifteen (15) 500kV bus supports
d. three (3) 500kV – 4000A wave traps and line tuners
e. three (3) 660 ft. section of 2-2156 KCMIL ACSR bus conductors

2. Install the following transmission line protection relays in the MEER at Colorado River Switchyard;
   a. two (2) GE C60 breaker management relays
3. Install additional points on the RTU at Colorado River Switchyard to monitor the Blythe II Project Generation Tie Line position at Colorado River Switchyard
4. Replace the existing 2000 amp 230kV wave trap on the Vista 230 kV transmission line position at Etiwanda Substation with a 3000 amp rated wave trap
5. Install two (2) GE N60 relays and one (1) SEL-2407 satellite synchronized clock at Devers Substation to support the required SPS-1
6. Install two (2) GE N60 relays and one (1) SEL-2407 satellite synchronized clock at Colorado River Substation to support the required SPS-1
7. Install two (2) GE N60 relays and one (1) SEL-2407 satellite synchronized clock at Etiwanda Substation to support the required SPS-2
8. Install two (2) GE N60 relays and one (1) SEL-2407 satellite synchronized clock at San Bernardino Substation to support the required SPS-2
9. Install required interface terminal equipment at Devers Substation, Etiwanda Substation and San Bernardino Substation to support the SPS-1 and SPS-2 related relays

(ii) **Participating TO's Delivery Network Upgrades:** None.

3. Distribution Upgrades: None.

4. Point of Change of Ownership: The point at which the conductors of Participating TO's Interconnection Facilities attach to the insulators on the north side of the first tower, constructed for the Blythe II Project Generation Tie Line, located outside the perimeter fence of Participating TO's Colorado River Switchyard. Interconnection Customer will install, own, and maintain said first tower, including all insulators and associated hardware.

5. Point of Interconnection: The Participating TO's Colorado River Switchyard 500kV bus

6. One-Line Diagram of Interconnection:

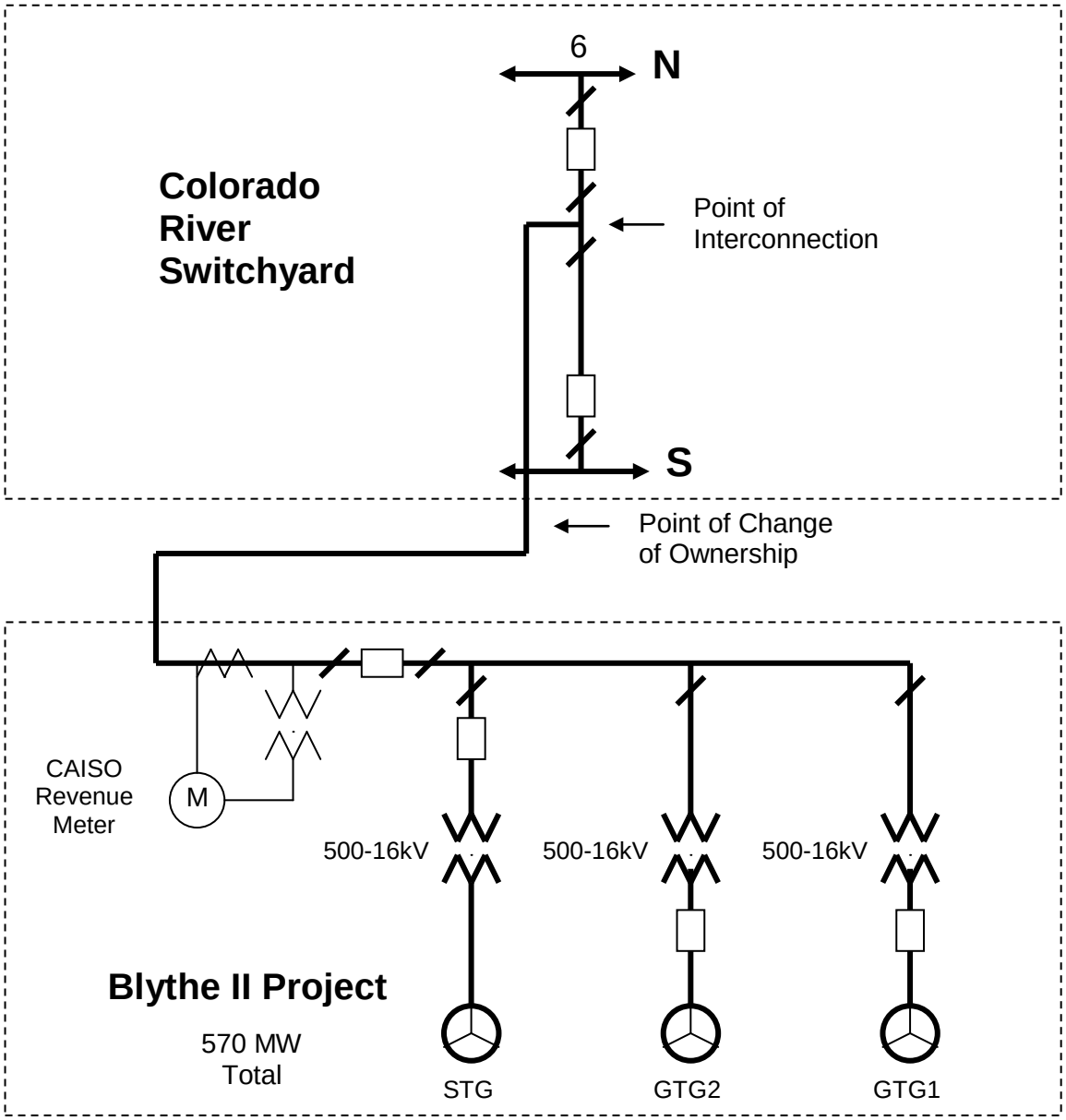

7. Additional Definitions: For the purposes of these Appendices, the following terms, when used with initial capitalization, whether in the singular or the plural, shall have the meanings specified below:

(a) Accounting Practice: Generally accepted accounting principles and practices applicable to electric utility operations.

(b) Blythe II Project: The Generating Facility as described in Appendix C of this LGIA.

(c) Blythe II Project Generation Tie Line: The single circuit, eight mile, 500kV radial generation tie line between the Blythe II Project integration substation and the Point of Change of Ownership with 2 - 2156 KCMIL ACSR conductor and OPGW, constructed, owned, operated and maintained by the Interconnection Customer.

(d) DPV2 Project-California Portion: Participating TO's proposed 500kV Colorado River Switchyard and proposed 500kV line segments between Colorado River Switchyard and Devers Substation and Devers Substation and Valley Substation for which Participating TO received a Certificate of Public Convenience and Necessity in CPUC Decision No. D07-01-040 on January 25, 2007 as modified by the CPUC on November 20, 2009.

(e) Capital Additions: Any modifications to the Participating TO's Interconnection Facilities in accordance with Article 5.19 of the LGIA. Such modifications may be any Units of Property which are added to the Participating TO's Interconnection Facilities; the enlargement, modification or betterment of any Units of Property constituting a part of the Participating TO's Interconnection Facilities; or the replacement of any Units of Property constituting a part of the Participating TO's Interconnection Facilities, irrespective of whether such replacement constitutes an enlargement, modification or betterment of that which it replaces; the costs of which additions, enlargements, modifications, betterments or replacements in accordance with Accounting Practice would be capitalized and have not previously been included in the Interconnection Facilities Cost. If Capital Additions are required in order to benefit the Participating TO, or because of damage caused by negligence or willful misconduct of the Participating TO, then the Interconnection Customer will not bear cost responsibility for such Capital Additions, and no adjustment will be made to the Interconnection Facilities Cost, and no Capital Additions Cost or One-Time Cost will be charged to the Interconnection Customer for such Capital Additions.

(f) Colorado River Switchyard: Participating TO's proposed 500kV switchyard near Blythe, California to which the existing Devers-Palo Verde 500kV line will be looped-in and which will be the eastern terminus of the DPV2 Project-California Portion. The Colorado River Switchyard is expected to be located within APN

879-080-022 and APN 879-080-025. The Colorado River Switchyard was previously known as the proposed Midpoint Switchyard.

(g) CPUC: The California Public Utilities Commission, or its regulatory successor.

(h) Credit Support: Parent guarantee, letter of credit, surety bond, or other security meeting the requirements of Article 11.5 of the LGIA.

(i) Customer-Financed Monthly Rate: The rate most recently adopted by the CPUC for application to the Participating TO's retail electric customers for added facilities, which does not compensate the Participating TO for replacement of added facilities. The currently effective Customer-Financed Monthly Rate is as provided in Section 15 of this Appendix A.

(j) Delivery Network Upgrades Cost: All costs, excluding One-Time Cost, determined by the Participating TO to be associated with the design, engineering, procurement, construction and installation of the Participating TO's Delivery Network Upgrades. The Delivery Network Upgrades Cost is provided in Section 14 of this Appendix A.

(k) Delivery Network Upgrades Payment: The sum of the Delivery Network Upgrades Cost and associated One-Time Cost. The Delivery Network Upgrades Payment is provided in Section 16 of this Appendix A.

(l) Distribution Upgrades Cost: All costs, excluding One-Time Cost, determined by the Participating TO to be associated with the design, engineering, procurement, construction and installation of the Participating TO's Distribution Upgrades. The Distribution Upgrades Cost is provided in Section 14 of this Appendix A.

(m) Distribution Upgrades Payment: The sum of the Distribution Upgrades Cost and associated One-Time Cost. The Distribution Upgrades Payment is provided in Section 16 of this Appendix A.

(n) Interconnection Facilities Charge: The monthly charge to the Interconnection Customer to recover the revenue requirements for the Participating TO's Interconnection Facilities, calculated as the product of the Customer-Financed Monthly Rate and the Interconnection Facilities Cost. The Interconnection Facilities Charge is provided in Section 15 of this Appendix A.

(o) Interconnection Facilities Completion Date: The date upon which the construction of the Participating TO's Interconnection Facilities is complete and such facilities are successfully tested and ready for service.

(p) Interconnection Facilities Cost: All costs, excluding One-Time Cost, determined by the Participating TO to be associated with the design, engineering, procurement, construction and installation of the Participating TO's

Interconnection Facilities. The Interconnection Facilities Cost is provided in Section 14 of this Appendix A.

(q) Interconnection Facilities Payment: The sum of the Interconnection Facilities Cost and associated One-Time Cost. The Interconnection Facilities Payment is provided in Section 16 of this Appendix A.

(r) ITCC: The ITCC is equal to the estimated tax liability described in Article 5.17.5 of the LGIA, and is the Income Tax Component of Contribution specified in the Preliminary Statement, Part M of the Participating TO's tariff on file with the CPUC, applicable to the Interconnection Facilities Cost and Distribution Upgrades Cost. An estimate of the ITCC applicable to the Interconnection Facilities Cost and Distribution Upgrades Cost is described in Section 10 of this Appendix A and is shown in Section 15 of this Appendix A.

(s) One-Time Cost: All costs determined by the Participating TO to be associated with the installation of the Participating TO's Interconnection Facilities, Delivery Network Upgrades, Distribution Upgrades, Reliability Network Upgrades or Capital Additions which are not capitalized.

(t) Reliability Network Upgrades Cost: All costs, excluding One-Time Cost, determined by the Participating TO to be associated with the design, engineering, procurement, construction and installation of the Participating TO's Reliability Network Upgrades. The Reliability Network Upgrades Cost is provided in Section 14 of this Appendix A.

(u) Reliability Network Upgrades Payment: The sum of the Reliability Network Upgrades Cost and associated One-Time Cost. The Reliability Network Upgrades Payment is provided in Section 16 of this Appendix A.

(v) Removal Cost: The actual cost the Participating TO incurs for the removal of the Participating TO's Interconnection Facilities, which is calculated as the amount, if positive, of the costs of removal minus the salvage value of the Participating TO's Interconnection Facilities.

(w) Special Protection System ("SPS"): A system that reduces or trips generation under contingency outages to maintain system stability or to limit overloads on system facilities.

(x) Units of Property: As described in FERC's "List of Units of Property for Use in Connection with Uniform System of Accounts Prescribed for Public Utilities and Licensees" in effect as of the date of this LGIA, and as such list may be amended from time to time.

8. Transmission Credits: Pursuant to Article 11.4 of the LGIA, the Interconnection Customer elects to receive repayment of the amounts advanced for the costs of the

Network Upgrades, which equals the sum of the Reliability Network Upgrades Payment and the Delivery Network Upgrades Payment as shown in Section 16 of this Appendix A.

9. **Security Amount for the Participating TO's Interconnection Facilities, Distribution Upgrades and Network Upgrades:** Pursuant to Article 11.5 and Appendix B of the LGIA, the Interconnection Customer shall provide Credit Support in the amount of $ 17,566,000 to cover the costs for constructing, procuring and installing the Participating TO's Interconnection Facilities, Distribution Upgrades and Network Upgrades. The disposition of any released Credit Support shall be directed by the Interconnection Customer.

10. **Security Amount for Estimated Tax Liability:** Pursuant to Article 5.17.4 of the LGIA, the Interconnection Customer's estimated tax liability is as follows:

    (Current Tax Rate x (Gross Income Amount – Present Value of Tax Depreciation))/(1 – Current Tax Rate) = 35%

    Estimated tax liability = 35% * (Interconnection Facilities Cost + Distribution Upgrades Cost) = 35% * $ 3,630,000 = $ 1,270,500
    Distribution Upgrades Cost = $ 0
    Interconnection Facilities Cost = $ 3,630,000

    Based upon the estimated tax liability, the Interconnection Customer shall provide the Participating TO cash or a letter of credit in the amount of $ 1,270,500, pursuant to Article 5.17.3 and Appendix B of the LGIA.

11. **Removal of the Participating TO's Interconnection Facilities:** Following termination of the LGIA, the Participating TO will remove the Participating TO's Interconnection Facilities from service to the Interconnection Customer pursuant to Article 2.5 of the LGIA. On or before the date one year following termination of the LGIA, the Participating TO shall notify the Interconnection Customer whether the Participating TO intends to physically remove the Participating TO's Interconnection Facilities, or any part thereof. If the Participating TO intends to physically remove the Participating TO's Interconnection Facilities or any part thereof, then the Participating TO shall physically remove such facilities within two years from the date of notification of intent, and the Interconnection Customer shall pay the Removal Cost. If the Participating TO does not intend to physically remove the Participating TO's Interconnection Facilities, or any part thereof, then the Interconnection Customer shall have no obligation to pay such Removal Cost.

12. **Charges:**

    (a) The Interconnection Customer shall pay to the Participating TO the following charges in accordance with the LGIA: (i) Delivery Network Upgrades Payment;

(ii) Distribution Upgrades Payment; (iii) Interconnection Facilities Payment; (iv) Reliability Network Upgrades Payment; (v) payments for any Capital Additions; (vi) Interconnection Facilities Charge; (vii) any reimbursable FERC fees pursuant to Section 13(g) of this Appendix A; (viii) Removal Cost pursuant to Article 2.4.3 of the LGIA and Section 11 of this Appendix A; (ix) termination charges pursuant to Article 2.4 of the LGIA; (x) disconnection costs pursuant to Article 2.5 of the LGIA; and (xi) suspension costs pursuant to Article 5.16 of the LGIA.

(b) The Delivery Network Upgrades Cost, Distribution Upgrades Cost, Interconnection Facilities Cost, Reliability Network Upgrades Cost, associated One-Time Cost and Removal Cost shall be compiled in accordance with Accounting Practice.

(c) If, during the term of the LGIA, the Participating TO executes an agreement to provide service to another entity (other than retail load) which contributes to the need for the Participating TO's Interconnection Facilities, the charges due hereunder may be adjusted to appropriately reflect such service based on the Participating TO's cost allocation principles in effect at such time and shall be subject to FERC's approval.

13. Supplemental Billing and Payment Provisions:

(a) Pursuant to Article 12.1 of the LGIA, the Participating TO shall submit to the Interconnection Customer invoices due for the preceding month for the Delivery Network Upgrades Payment, Distribution Upgrades Payment, Interconnection Facilities Payment, and Reliability Network Upgrades Payment.

(b) Pursuant to Article 10.5 of the LGIA, commencing on or following the Interconnection Facilities Completion Date, each month the Participating TO will render bills to the Interconnection Customer for the Interconnection Facilities Charge. The Interconnection Facilities Charge payments shall initially be based on the estimated Interconnection Facilities Cost as specified in Section 14 of this Appendix A, and such payments shall be subject to later adjustment pursuant to Section 13.(b)(i) and 13.(b)(ii) . The Interconnection Facilities Charge for the first and last month of service hereunder shall be pro-rated based on the number of days in which service was provided during said months.

(i) If the amounts paid for the Interconnection Facilities Charge are less than the amounts due for the Interconnection Facilities Charge as determined from the actual recorded Interconnection Facilities Cost, Participating TO will bill Interconnection Customer the difference between the amounts previously paid by Interconnection Customer and the amounts which would have been paid based on actual recorded costs, without interest, on the next regular billing.

(ii) If the amounts paid for the Interconnection Facilities Charge are greater than the amounts due for the Interconnection Facilities Charge as determined from

the actual recorded Interconnection Facilities Cost, Participating TO will credit Interconnection Customer the difference between the amounts previously paid by Interconnection Customer and the amounts which would have been paid based on actual recorded costs, without interest, on the next regular billing.

(c) In the event that any portion of Participating TO's Interconnection Facilities is not complete but, at the request of Interconnection Customer, Participating TO commences interconnection service under this LGIA notwithstanding the incomplete facilities, Participating TO shall commence billing, and Interconnection Customer shall pay, the Interconnection Facilities Charge commencing on the date that such service commences.

(d) In accordance with Article 5.19.3 of the LGIA, the Participating TO shall submit to the Interconnection Customer invoices due for the preceding month for the payments due for Capital Additions, if any.

(i) For Capital Additions that are the cost responsibility of the Interconnection Customer, prior to commencing work, the Participating TO will provide at least sixty (60) Calendar Days advance written notification to the Interconnection Customer, except that, at the Participating TO's sole discretion, the Participating TO may commence the work on the Capital Additions with either shorter advance written notification or written notification after the work has commenced if the Participating TO determines that the Capital Additions are required in accordance with safety or regulatory requirements or to preserve system integrity or reliability. The written notification will include the estimated cost of the Capital Additions, and the amount of and due date for the security, if any, required to be paid by the Interconnection Customer sufficient to cover the costs for constructing, procuring and installing the Capital Additions consistent with the applicable terms of Article 11.5 of the LGIA.

(ii) Except as provided in Section 7(e) above, if certain Participating TO's Interconnection Facilities are removed to accommodate Capital Additions and such removal results in a change in the Interconnection Facilities Cost, the Interconnection Facilities Charge shall be adjusted as of the in-service date of such Capital Additions to reflect the change in the Interconnection Facilities Cost.

(iii) Except as provided in Section 7(e) above, if Capital Additions result in an increase in the Interconnection Facilities Cost, then the Interconnection Facilities Charge shall be adjusted as of the in-service date of such Capital Additions to reflect the change in such costs.

(e) As soon as reasonably practicable, but within twelve (12) months after the in-service date of any Capital Additions, the Participating TO shall provide an invoice of the final cost of the construction of the Capital Additions to the Interconnection Customer, and shall set forth such costs in sufficient detail to

enable the Interconnection Customer to compare the actual costs with the estimates and to ascertain deviations, if any, from the cost estimates. The Participating TO shall refund to the Interconnection Customer any amount by which the payment made by the Interconnection Customer for estimated costs of the Capital Additions exceeds the actual costs of construction within thirty (30) Calendar Days of the issuance of such final construction invoice; or, in the event the actual costs of construction exceed the Interconnection Customer's payment made for the estimated costs of the Capital Additions, then the Interconnection Customer shall pay to the Participating TO any amount by which the actual costs of construction exceed the payment made by the Interconnection Customer for estimated costs within thirty (30) Calendar Days of the issuance of such final construction invoice.

(f) If, in accordance with the removal of the Participating TO's Interconnection Facilities specified in Section 11 above, the Participating TO decides to physically remove the Participating TO's Interconnection Facilities, or any part thereof, the Participating TO shall render a bill to the Interconnection Customer for the Removal Cost. The Interconnection Customer shall pay the Removal Cost in accordance with Article 2.4.3 of the LGIA. Such billing shall initially be based on the Participating TO's estimate of the Removal Cost. Within twelve (12) months following the removal of the Participating TO's Interconnection Facilities, or any part thereof, the Participating TO shall determine the actual Removal Cost and provide the Interconnection Customer with a final invoice. The Participating TO shall refund to the Interconnection Customer any amount by which the payment by the Interconnection Customer for the estimated Removal Cost exceeds the actual Removal Cost within thirty (30) Calendar Days of the issuance of such final invoice; or, in the event the actual Removal Cost exceeds the Interconnection Customer's payment for the estimated Removal Cost, then the Interconnection Customer shall pay to the Participating TO any amount by which the actual Removal Cost exceeds the payment by the Interconnection Customer for the estimated Removal Cost within thirty (30) Calendar Days of the issuance of such final invoice.

(g) The Interconnection Customer shall reimburse the Participating TO for all fees and charges related to the FERC fees and annual charges provided in Sections 381 and 382 of the FERC's regulations (18 C.F.R. § 381 and 382), as such regulation may from time to time be amended, that are imposed on the Participating TO attributable to the service provided under the LGIA, or any amendments thereto. The Participating TO will render bills to the Interconnection Customer for any such fees and charges incurred since the preceding billing. As of the Effective Date, no such fees and charges have been imposed on the Participating TO attributable to the service provided under the LGIA.

14. Interconnection Facilities, Reliability Network Upgrades, Delivery Network Upgrades and Distribution Upgrades Cost Summary:

(a) Estimated Cost:

Element	Interconnection Facilities Cost	Reliability Network Upgrades Cost	Delivery Network Upgrades Cost	Distribution Upgrades Cost	ITCC/estimated tax liability Interconnection Facilities	ITCC/estimated tax liability Distribution Upgrades	One-Time Cost	Total
Transmission: Blythe II-Colorado River Switchyard line segment inside perimeter fence	$ 152,000	$ 0	$ 0	$ 0	$ 53,200	$ 0	$ 0	$ 205,200
Substation: Equip position 6 at Colorado River Switchyard; install line protection relays in MEER	$ 1,938,000	$ 12,151,000	$ 0	$ 0	$ 678,300	$ 0	$ 0	$ 14,767,300
Substation: SPS relays at Devers Sub	$ 0	$ 137,000	$ 0	$ 0	$ 0	$ 0	$ 0	$ 137,000
Substation: SPS relays at Colorado River Switchyard	$ 0	$ 137,000	$ 0	$ 0	$ 0	$ 0	$ 0	$ 137,000
Substation: SPS relays at Etiwanda Sub	$ 0	$ 275,000	$ 0	$ 0	$ 0	$ 0	$ 0	$ 275,000
Substation: SPS relays at San Bernardino Sub	$ 0	$ 275,000	$ 0	$ 0	$ 0	$ 0	$ 0	$ 275,000

Substation: Replace wave trap at Etiwanda Sub	$ 0	$ 84,000	$ 0	$ 0	$ 0	$ 0	$ 0	$ 84,000
Power System Control: RTU at Blythe II Project	$ 41,000	$ 0	$ 0	$ 0	$ 14,350	$ 0	$ 0	$ 55,350
Power System Control: RTU at Colorado River Switchyard	$ 0	$ 53,000	$ 0	$ 0	$ 0	$ 0	$ 0	$ 53,000
Telecom: Circuit to support Line Protection, RTU, SPS-1 & SPS-2	$ 1,029,000	$ 0	$ 0	$ 0	$ 360,150	$ 0	$ 0	$ 1,389,150
Telecom: Interface equipment at Colorado River Switchyard, Devers, Etiwanda and San Berdo Subs to support SPS-1 & SPS-2	$ 0	$ 824,000	$ 0	$ 0	$ 0	$ 0	$ 0	$ 824,000
Environmental Health and Safety	$ 426,000	$ 0	$ 0	$ 0	$ 149,100	$ 0	$ 0	$ 575,100
Licensing	$ 44,000	$ 0	$ 0	$ 0	$ 15,400	$ 0	$ 0	$ 59,400
Total	$ 3,630,000	$ 13,936,000	$ 0	$ 0	$ 1,270,500	$ 0	$ 0	$18,836,500

(b) Actual Cost:

[TO BE INSERTED AFTER TRUE-UP OF ACTUAL COSTS]

Element	**Interconnection Facilities Cost**	**Reliability Network Upgrades Cost**	**Delivery Network Upgrades Cost**	**Distribution Upgrades Cost**	**ITCC/estimated tax liability Interconnection Facilities**	**ITCC/estimated tax liability Distribution Upgrades**	**One-Time Cost**	**Total**
Total								

15. Interconnection Facilities Charge:

Interconnection Facilities Charge = Customer-Financed Monthly Rate x (Interconnection Facilities Cost)

		Estimated		Actual	
Effective Date	Customer-Financed Monthly Rate	Estimated Interconnection Facilities Cost	Interconnection Facilities Charge Based on Estimated Cost	Actual Interconnection Facilities Cost	Interconnection Facilities Charge based on actual cost
As of the Interconnection Facilities Completion Date	0.38%	$ 3,630,000	$ 13,794.00	[to be inserted after true-up]	[to be inserted after true-up]

16. Estimate of Monthly Incurred Costs for the Participating TO's Interconnection Facilities, Distribution Upgrades and Network Upgrades:

An estimate of the monthly incurred costs is as shown below. [Note: This estimate assumes that the LGIA has been executed and work starts by April 1, 2010 to achieve an April 1, 2013 In-Service Date.]

Payment Period	Interconnection Facilities Cost	Reliability Network Upgrades Cost	Delivery Network Upgrades Cost	One-Time Cost	Project Payment	Payment Due Date	ITCC
1	$10,000	$20,000	$ 0	$ 0	$30,000	5/1/2010	$3,500
2	$10,000	$20,000	$ 0	$ 0	$30,000	6/1/2010	$3,500
3	$10,000	$20,000	$ 0	$ 0	$30,000	7/1/2010	$3,500
4	$10,000	$30,000	$ 0	$ 0	$40,000	8/1/2010	$3,500
5	$10,000	$30,000	$ 0	$ 0	$40,000	9/1/2010	$3,500
6	$10,000	$40,000	$ 0	$ 0	$50,000	10/1/2010	$3,500
7	$10,000	$40,000	$ 0	$ 0	$50,000	11/1/2010	$3,500
8	$10,000	$40,000	$ 0	$ 0	$50,000	12/1/2010	$3,500
9	$10,000	$50,000	$ 0	$ 0	$60,000	1/1/2011	$3,500
10	$20,000	$60,000	$ 0	$ 0	$80,000	2/1/2011	$7,000
11	$20,000	$70,000	$ 0	$ 0	$90,000	3/1/2011	$7,000
12	$20,000	$80,000	$ 0	$ 0	$100,000	4/1/2011	$7,000
13	$20,000	$90,000	$ 0	$ 0	$110,000	5/1/2011	$7,000
14	$30,000	$110,000	$ 0	$ 0	$140,000	6/1/2011	$10,500
15	$30,000	$130,000	$ 0	$ 0	$160,000	7/1/2011	$10,500
16	$50,000	$170,000	$ 0	$ 0	$220,000	8/1/2011	$17,500
17	$60,000	$230,000	$ 0	$ 0	$290,000	9/1/2011	$21,000
18	$80,000	$320,000	$ 0	$ 0	$400,000	10/1/2011	$28,000
19	$140,000	$520,000	$ 0	$ 0	$660,000	11/1/2011	$49,000
20	$190,000	$730,000	$ 0	$ 0	$920,000	12/1/2011	$66,500
21	$250,000	$970,000	$ 0	$ 0	$1,220,000	1/1/2012	$87,500
22	$260,000	$1,010,000	$ 0	$ 0	$1,270,000	2/1/2012	$91,000
23	$270,000	$1,040,000	$ 0	$ 0	$1,310,000	3/1/2012	$94,500
24	$260,000	$1,010,000	$ 0	$ 0	$1,270,000	4/1/2012	$91,000
25	$230,000	$880,000	$ 0	$ 0	$1,110,000	5/1/2012	$80,500
26	$180,000	$700,000	$ 0	$ 0	$880,000	6/1/2012	$63,000
27	$170,000	$650,000	$ 0	$ 0	$820,000	7/1/2012	$59,500

28	$170,000	$660,000	$ 0	$ 0	$830,000	8/1/2012	$59,500
29	$180,000	$680,000	$ 0	$ 0	$860,000	9/1/2012	$63,000
30	$180,000	$700,000	$ 0	$ 0	$880,000	10/1/2012	$63,000
31	$180,000	$680,000	$ 0	$ 0	$860,000	11/1/2012	$63,000
32	$170,000	$650,000	$ 0	$ 0	$820,000	12/1/2012	$59,500
33	$150,000	$580,000	$ 0	$ 0	$730,000	1/1/2013	$52,500
34	$140,000	$520,000	$ 0	$ 0	$660,000	2/1/2013	$49,000
35	$90,000	$406,000	$ 0	$ 0	$496,000	3/1/2013	$31,500
Total	**$3,630,000**	**$13,936,000**	**$ 0**	**$ 0**	**$17,566,000**		**$1,270,500**

Delivery Network Upgrades Payment = (Delivery Network Upgrades Cost + associated One-Time Cost) = $ 0

Distribution Upgrades Payment = (Distribution Upgrades Cost + associated One-Time Cost) = $ 0

Interconnection Facilities Payment = (Interconnection Facilities Cost + associated One-Time Cost) =$ 3,630,000

Reliability Network Upgrades Payment = (Reliability Network Upgrades Cost + associated One-Time Cost) = $ 13,936,000

Transmission credits pursuant to Section 8 of this Appendix A = Reliability Network Upgrades Payment +
Delivery Network Upgrades Payment = $ 13,936,000

17. Other Potential Facilities:

The Interconnection Customer understands and acknowledges that the interconnection of the Blythe II Project is dependent upon certain network upgrades which are currently the cost responsibility of projects ahead of the Blythe II Project in the interconnection application queue. In the event (i) a project in the queue ahead of the Blythe II Project is withdrawn from the queue, or (ii) it is determined by the Participating TO or the CAISO that some or all of the network upgrades currently assigned to earlier-queued projects are no longer required by such projects, the Interconnection Customer may be responsible for an amount up to the maximum cost exposure of the network upgrades identified in this Appendix A, Section 17. Such additional other potential facilities or network upgrades are taken from the Interconnection Facilities Study.

Furthermore, the Interconnection Customer may also be responsible for the cost of any additional facilities or modifications to the Participating TO's electric system required to interconnect the Blythe II Project as a result of the termination or amendment of another project's interconnection agreement. The Interconnection Customer's revised cost responsibility for the network upgrades, and for any such additional facilities or modifications, if any, would be reflected in an amendment to the LGIA. Such amendment shall be subject to FERC acceptance or approval.

While the Interconnection Customer is currently responsible for the Network Upgrades identified in Section 2 of this Appendix A to the LGIA, the Interconnection Customer may be responsible for all or a portion of the following other network upgrades, under the conditions described above.

Element	**Maximum Cost Exposure--Other Potential Facilities Cost**
Vista Substation: Replace line drops at Mira Loma 220kV line position	$ 77,000

Appendix B
To LGIA

Milestones

1. **The Interconnection Customer's Selected Option:** Pursuant to Article 5.1 of the LGIA, the Interconnection Customer has selected the Standard Option.

2. **Milestone Dates:**

Item	Milestone	Responsible Party	Due Date
(a)	Submit proof of insurance coverage in accordance with Article 18.3 of the LGIA	Interconnection Customer	Within ten (10) Calendar Days of the execution of this LGIA
(b)	Submittal of written authorization to proceed with design and procurement of the Participating TO's Interconnection Facilities, Distribution Upgrades and Network Upgrades to the Participating TO and CAISO in accordance with Article 5.5.2 of the LGIA	Interconnection Customer	Within thirty (30) Calendar Days of the Effective Date
(c)	Submittal of security for the Participating TO's Interconnection Facilities, Distribution Upgrades and Network Upgrades to the Participating TO pursuant to Articles 5.5.3, 5.6.4 and 11.5 of the LGIA	Interconnection Customer	Within thirty (30) Calendar Days prior to the first payment due date in Section 16 of Appendix A
(d)	Submittal of written authorization to proceed with construction to the Participating TO and the CAISO pursuant to Article 5.6.3 of the LGIA	Interconnection Customer	Within thirty (30) Calendar Days prior to the first payment due date in Section 16 of Appendix A
(e)	Submittal of security for the estimated tax liability to the Participating TO pursuant to Article 5.17.3 of the LGIA	Interconnection Customer	Within thirty (30) Calendar Days prior to the first payment due date in Section 16 of

			Appendix A
(f)	Completion of the Participating TO's Interconnection Facilities, Distribution Upgrades and Network Upgrades	Participating TO	April 1, 2013, assuming an Effective Date of no later than April 1, 2010*
(g)	Submittal of initial specifications for the Interconnection Customer's Interconnection Facilities and Blythe II Project, including System Protection Facilities, to the Participating TO and the CAISO pursuant to Article 5.10.1 of the LGIA	Interconnection Customer	At least one hundred eighty (180) Calendar Days prior to the Initial Synchronization Date
(h)	Initial information submission which shall include the Participating TO's Transmission System information necessary to allow the Interconnection Customer to select equipment, in accordance with Article 24.2 of the LGIA	Participating TO	At least one hundred eighty (180) Calendar Days prior to Trial Operation
(i)	Updated information submission by the Interconnection Customer, including manufacturer information in accordance with Article 24.3 of the LGIA	Interconnection Customer	No later than one hundred eighty (180) Calendar Days prior to Trial Operation
(j)	Review of and comment on the Interconnection Customer's initial specifications pursuant to Article 5.10.1 of the LGIA	Participating TO and CAISO	Within thirty (30) Calendar Days of the Interconnection Customer's submission of initial specifications
(k)	Submittal of final specifications for the Interconnection Customer's Interconnection Facilities and Blythe II Project, including System Protection Facilities, to the Participating TO and the CAISO as specified in Article 5.10.1 of the LGIA	Interconnection Customer	At least ninety (90) Calendar Days prior to the Initial Synchronization Date.
(l)	Review of and comment on the Interconnection Customer's final specifications pursuant to Article	Participating TO	Within thirty (30) Calendar Days of the Interconnection

	5.10.1 of the LGIA	and CAISO	Customer's submission of final specifications
(m)	Notification of Balancing Authority Area to the Participating TO and CAISO pursuant to Article 9.2	Interconnection Customer	At least three (3) months prior to the Initial Synchronization Date
(n)	Performance of a complete calibration test and functional trip test of the System Protection Facilities pursuant to Article 9.7.4.6 of the LGIA	Interconnection Customer and Participating TO	At least sixty (60) Calendar Days prior to the In-Service Date
(o)	In-Service Date	Interconnection Customer	April 1, 2013
(p)	Initial Synchronization Date	Interconnection Customer	June 1, 2013
(q)	Trial Operation	Interconnection Customer	June 1, 2013
(r)	Performance of a complete calibration test and functional trip test of the System Protection Facilities pursuant to Article 9.7.4.6 of the LGIA	Interconnection Customer and Participating TO	At least sixty (60) Calendar Days prior to the Commercial Operation Date
(s)	Testing of the Participating TO's Interconnection Facilities, Distribution Upgrades and Network Upgrades and testing of the Interconnection Customer's Interconnection Facilities and Blythe II Project in accordance with Article 6.1 of the LGIA	Interconnection Customer and Participating TO	At least sixty (60) Calendar Days prior to the Initial Synchronization Date
(t)	Provide written approval to the Interconnection Customer for the operation of the Blythe II Project in accordance with Article 6.1 of the LGIA	Participating TO	At least fifteen (15) Calendar Days prior to the Initial Synchronization Date
(u)	Commercial Operation Date	Interconnection Customer	December 31, 2013
(v)	Submittal of "as-built" drawings, information and documents for the Interconnection Customer's Interconnection Facilities and the Electric Generating Units in accordance with Article 5.10.3 of	Interconnection	Within one hundred twenty (120) Calendar Days after the

	the LGIA to the Participating TO and the CAISO	Customer	Commercial Operation Date, unless otherwise agreed

* Note: The Interconnection Customer understands and acknowledges that such timeline is only an estimate and that equipment and material lead times, labor availability, outage coordination, regulatory approvals, or other unforeseen events could delay the actual in-service date beyond that specified.

If the Interconnection Customer suspends work pursuant to Article 5.16 of the LGIA, then all milestones for each Party set forth in this Appendix B shall be suspended during the suspension period. Upon the Interconnection Customer's request to recommence the work, the Parties shall negotiate in good faith new revised milestone dates for each milestone, taking into account the period of suspension and necessary re-studies, if required. Appendix B and any terms and conditions associated with the estimated costs and payment schedule, if necessary, shall be amended following the establishment of such revised milestone dates.

The Interconnection Customer also understands and agrees that the method of service required to interconnect the Blythe II Project may require re-evaluation due to the suspension of the project and changes to the Participating TO's electrical system or addition of new generation.

The Parties understand and acknowledge that the milestones set forth in this Appendix B may be amended in accordance with Section 3(f) of Appendix C.

The Participating TO will use Reasonable Efforts to provide a monthly progress report to the Interconnection Customer by the 15th of each month commencing on May 15th 2010 and continuing through the completion of construction of the Participating TO's Interconnection Facilities and the Network Upgrades. The monthly progress report shall include a status on those elements identified in Appendix A Section 14, including schedule and costs recorded through the previous month for each element. The progress report shall identify any anticipated changes to the LGIA scope, schedule and costs. The Parties acknowledge that changes to the LGIA scope and cost may be subject to an amendment of the LGIA.

Appendix C
To LGIA

Interconnection Details

1. **Generating Facility:** All equipment and facilities comprising the Blythe II Project generating facility in Blythe, California (which consists of the Blythe II and Blythe II Expansion projects listed at position #17 and #219, for 520 MW and 50 MW, respectively, in the CAISO Controlled Grid Generation Queue), as disclosed by the Interconnection Customer in its Interconnection Requests as such requests were amended by Interconnection Customer on December 16, 2009, and approved by Participating TO and the CAISO on December 22, 2009, which consists of a 2 on 1 combined cycle configuration comprised of one (1) Siemens SST-5000 steam turbine generator rated at 405 MVA, two (2) Siemens SGT6-5000F(4) natural gas-fired combustion turbines, each rated at 285 MVA, three (3) 500/16kV generator step-up transformers, meters and metering equipment and appurtenant equipment (the "Blythe II Project"). In accordance with the Participating TO and CAISO approval of the Interconnection Customer's amended Interconnection Requests, the two combustion turbine 500/16kV generator step-up transformers shall have a positive and zero sequence impedance of 0.078 on a 100 MVA base; the steam turbine 500/16kV generator step-up transformer shall have a positive and zero sequence impedance of 0.064 on a 100 MVA base. Generator step-up transformer impedances other than that specified above in this Section 1 of Appendix C will not be permissible unless otherwise approved by the Participating TO and the CAISO.

2. **Interconnection Customer Operational Requirements**.

   (a) Pursuant to Article 9.4 of the LGIA, the Interconnection Customer shall operate the Blythe II Project and the Interconnection Customer's Interconnection Facilities in accordance with the CAISO Tariff, the WSCC Reliability Management System Agreement and NERC requirements, including NERC/Western Electricity Coordinating Council reliability standards and Applicable Reliability Standards.

   (b) The Blythe II Project shall be operated so as to prevent or protect against the following adverse conditions on the Participating TO's electric system: inadvertent and unwanted re-energizing of a utility dead line or bus; interconnection while out of synchronization; overcurrent; voltage imbalance; ground faults; generated alternating current frequency outside permitted safe limits; poor power factor or reactive power outside permitted limits; and abnormal waveforms.

3. **Interconnection Principles:**

(a) Notwithstanding the generating units MVA ratings described above in Section 1 of this Appendix C, this LGIA provides for interconnection of a total capacity of 570 MW (combined total for queue position #17 and queue position #219 in the CAISO Queue), resulting from the interconnection of the Blythe II Project, as described in Section 1 of this Appendix C. The Interconnection Customer acknowledges that if the Interconnection Customer wishes to increase the amount of interconnection capacity provided pursuant to this LGIA, the Interconnection Customer shall be required to submit a new application in accordance with the terms and conditions of the CAISO Tariff.

(b) The costs associated with any mitigation measures required to third party transmission systems resulting from the interconnection of the Blythe II Project to the Participating TO's electrical system are not reflected in this LGIA. The Participating TO shall have no responsibility to pay costs associated with any such mitigation measures.

(c) In the event the Participating TO's Interconnection Facilities are utilized to provide retail service to the Interconnection Customer in addition to the wholesale Interconnection Service provided herein, and the Interconnection Customer fails to make payment for such retail service in accordance with the Participating TO's applicable retail tariffs, the Participating TO's Interconnection Facilities may be removed from service to the Interconnection Customer, subject to the notice and cure provisions of such retail tariffs, until payment is made by the Interconnection Customer pursuant to such retail tariffs.

(d) Review by the Participating TO of the electrical specifications, design, construction, operation, or maintenance of the Blythe II Project or the Interconnection Customer's Interconnection Facilities shall not constitute any representation as to the economic or technical feasibility, operational capability, or reliability of such facilities. The Interconnection Customer shall in no way represent to any third party that any such review by the Participating TO of such facilities, including, but not limited to, any review of the design, construction, operation, or maintenance of such facilities by the Participating TO, is a representation by the Participating TO as to the economic or technical feasibility, operational capability, or reliability of the Blythe II Project or the Interconnection Customer's Interconnection Facilities.

(e) The Interconnection Customer shall complete and receive approval for all environmental impact studies necessary for the construction, operation, and maintenance of the Participating TO's Interconnection Facilities described in Appendix A of this LGIA. Interconnection Customer shall include such facilities in all such environmental impact studies, where applicable. Interconnection Customer shall provide the results of such studies and approvals to Participating TO for use in Participating TO's application(s) to obtain the regulatory approvals required to be obtained by Participating TO

for the construction, operation, and maintenance of the Participating TO's Interconnection Facilities described in Appendix A of this LGIA.

(f) Construction of Participating TO's Colorado River Switchyard pursuant to a valid CPUC Certificate of Public Convenience and Necessity ("CPCN") and CAISO approval is a precondition for construction and installation of the Participating TO's Interconnection Facilities and Reliability Network Upgrades described in Appendix A of this LGIA. On November 20, 2009, the CPUC issued a Decision Modifying Decision 07-01-040 Granting a CPCN from the CPUC that authorized Participating TO to construct the DPV2 Project-California Portion, including the Colorado River Switchyard. However, the CPCN is conditioned on CAISO final approval for the DPV2 Project-California Portion. Accordingly, work on the Participating TO's Interconnection Facilities and Reliability Network Upgrades may only proceed based on the status of such approval as follows:

(i) If the CAISO approves the DPV2 Project-California Portion by March 31, 2010, then work on the Colorado River Switchyard may proceed as part of the DPV2 Project-California Portion.

(ii) However, if the CAISO has not approved the DPV2 Project-California Portion by March 31, 2010, the Interconnection Customer may elect to proceed with interconnection of the Blythe II Project prior to such CAISO approval. If the Interconnection Customer elects to proceed prior to such CAISO approval, then the Parties will enter into good faith negotiations in order to amend this LGIA to reflect the construction of Colorado River Switchyard as a Reliability Network Upgrade designed to provide for interconnection of the Blythe II Project to Participating TOs existing Dever-Palo Verde 500kV line. As a Reliability Network Upgrade, the Colorado River Switchyard shall stand separate and apart from the DPV2 Project-California Portion. The Parties recognize that any work on the Colorado River Switchyard pursuant to such amendment may require approval from federal, state and local authorities, and/or approval from the CAISO. Accordingly, any work pursuant to this subsection 3(ii) shall not commence until and unless all required approvals are granted.

(iii) Alternatively, if the CAISO has not approved the DPV2 Project-California Portion by March 31, 2010, and the Interconnection Customer decides to await such approval, then the Parties will, as needed, amend this LGIA by updating the projected Appendix B milestone dates accordingly. Any such amendment will be negotiated by the Parties in good faith and will be subject to FERC acceptance.

(iv) Finally, notwithstanding subparagraphs 3(f)(i) through 3(f)(iii), if the CAISO has not yet issued its approval for the DPV2 Project-California Portion by March 31, 2011, then the Parties will negotiate to amend this

LGIA to permit the construction of the Colorado River Switchyard as set forth in Section 3(f)(ii) of this Appendix C. Participating TO shall not begin construction of the Colorado River Switchyard without obtaining required regulatory approvals.

4. Interconnection Operations:

(a) The Interconnection Customer shall cause the Blythe II Project to participate in any SPS required to prevent thermal overloads and unstable conditions resulting from outages. Such participation shall be in accordance with applicable FERC regulations, and CAISO Tariff provisions and protocols. The Interconnection Customer will not be entitled to any compensation from the Participating TO, pursuant to the LGIA, for loss of generation output when (i) the Blythe II Project generation is reduced or tripped off-line due to implementation of the SPS; or (ii) such generation output is restricted in the event the SPS becomes inoperable. Pursuant to Good Utility Practice, the Participating TO will provide the Interconnection Customer advance notice of any required SPS beyond that which has already been identified in the Interconnection Studies or this LGIA.

(b) The Interconnection Customer shall cause the Blythe II Project to participate in CAISO congestion management in accordance with CAISO Tariff and Scheduling Protocols.

(c) Following outages of the Interconnection Facilities or the Blythe II Project, the Interconnection Customer shall not energize the Blythe II Project for any reason without specific permission from the Participating TO's and the CAISO's operations personnel. Such permission shall not be unreasonably withheld.

(d) The Interconnection Customer shall maintain operating communications with the Participating TO's designated switching center. The operating communications shall include, but not be limited to, system parallel operation or separation, scheduled and unscheduled outages, equipment clearances, protective relay operations, and levels of operating voltage and reactive power.

(e) Operational studies will be performed by the Participating TO on an as needed basis and at the Interconnection Customer's expense prior to the Blythe II Project Initial Synchronization Date to confirm that the necessary upgrades or replacements identified in Section 17 of Appendix A have been, or will be, placed in service in time to allow the interconnection and operation of the Blythe II Project. In the event that it is determined that the required upgrades or replacements cannot be completed by the Blythe II Project Initial Synchronization Date, such date will need to be delayed until the necessary upgrades or replacements have been made. If upgrades or replacements

identified in Section 17 of Appendix A are required to be advanced in order to accommodate the Blythe II Project Initial Synchronization Date, such advancement shall be addressed in accordance with Section 12.2.2 of the Standard Large Generator Interconnection Procedures.

5. **Compliance with Applicable Reliability Standards:** The Interconnection Customer shall comply with all Applicable Reliability Standards for its Interconnection Customer's Interconnection Facilities and the Blythe II Project. The Participating TO will not assume any responsibility for complying with mandatory reliability standards for such facilities and offers no opinion whether the Interconnection Customer must register with NERC. If required to register with NERC, the Interconnection Customer shall be responsible for complying with all Applicable Reliability Standards for its Interconnection Customer's Interconnection Facilities up to the Point of Change of Ownership as described in Section 4 of Appendix A of this LGIA.

Appendix D
To LGIA

Security Arrangements Details

Infrastructure security of CAISO Controlled Grid equipment and operations and control hardware and software is essential to ensure day-to-day CAISO Controlled Grid reliability and operational security. FERC will expect the CAISO, all Participating TOs, market participants, and Interconnection Customers interconnected to the CAISO Controlled Grid to comply with the recommendations offered by the President's Critical Infrastructure Protection Board and, eventually, best practice recommendations from the electric reliability authority. All public utilities will be expected to meet basic standards for system infrastructure and operational security, including physical, operational, and cyber-security practices.

The Interconnection Customer shall meet the requirements for security implemented pursuant to the CAISO Tariff, including the CAISO's standards for information security posted on the CAISO's internet web site at the following internet address: http://www.caiso.com/pubinfo/info-security/index.html.

Appendix E
To LGIA

Commercial Operation Date

This Appendix E is a part of the LGIA.

[Date]

Mr. Stephen Rutty
Manager of Grid Assets
California Independent System Operator Corporation
151 Blue Ravine Road
Folsom, CA 95630

Mr. Robert Kott
Manager of Model and Contract Implementation
California Independent System Operator Corporation
151 Blue Ravine Road
Folsom, CA 95630

Mr. William Law
Manager, Grid Contracts Administration and Billing
Southern California Edison Company
P. O. Box 800
2244 Walnut Grove Avenue
Rosemead, California 91770

Re: Caithness Blythe II, LLC – Blythe II Project Electric Generating Units

Dear Messrs. Rutty, Kott, and Law:

On **[Date] Caithness Blythe II, LLC** has completed Trial Operation of Unit No. ___. This letter confirms that Caithness Blythe II, LLC commenced Commercial Operation of Unit No. ___ at the Electric Generating Unit, effective as of **[Date plus one day]**.

Thank you.

[Signature]

Caithness Blythe II, LLC

cc: Linda Wright

Appendix F
To LGIA

Addresses for Delivery of Notices and Billings

Notices:

CAISO:

California ISO
Ms. Linda Wright
151 Blue Ravine Rd.
Folsom, CA 95630

Participating TO:

Southern California Edison Company
Manager, Grid Contracts Administration and Billing
P. O. Box 800
Rosemead, California 91770

Interconnection Customer:

Caithness Blythe II, LLC
Robert D. Looper
Senior Vice President
1015 W. Hays Street
Boise, ID 83702

Operational Matters, Force Majeure, and Outage Notices:

Caithness Blythe II, LLC
Attention: Gail Conboy
Legal Assistant
565 5th Avenue, 29th Floor
New York, NY 10017
Phone: (212) 782-0549
Fax: (212) 921-9239

For Emergencies:

Caithness Blythe II, LLC
Attention: Gail Conboy
Legal Assistant
565 5th Avenue, 29th Floor
New York, NY 10017
Phone: (212) 782-0549
Fax: (212) 921-9239

Billings and Payments:

Participating TO:

Southern California Edison Company
Accounts Receivable
P. O. Box 600
Rosemead, California 91770-0600

Interconnection Customer:

Caithness Blythe II, LLC
Attention: Gail Conboy
Legal Assistant
565 5th Avenue, 29th Floor
New York, NY 10017

CAISO:

California ISO
Finance Dept.
Mr. Dennis Estrada
151 Blue Ravine Rd.
Folsom, CA 95630

Alternative Forms of Delivery of Notices (telephone, facsimile or e-mail):

CAISO:

lwright@caiso.com
Jbrown@caiso.com

Participating TO:

Southern California Edison Company
Manager, Grid Contracts Administration and Billing
Tel: (626) 302-9640
Fax: (626) 302-1152

Interconnection Customer:

rlooper@spellc.com
gconboy@caithnessenergy.com

Appendix G
To LGIA

Reliability Management System Agreement

RELIABILITY MANAGEMENT SYSTEM AGREEMENT
by and between
CALIFORNIA INDEPENDENT SYSTEM OPERATOR CORPORATION
and
CAITHNESS BLYTHE II, LLC

THIS RELIABILITY MANAGEMENT SYSTEM AGREEMENT (the "Agreement"), is entered into this _____ day of _____, 20____, by and between California Independent System Operator Corporation (the "Transmission Operator") and Caithness Blythe II, LLC (the "Generator").

WHEREAS, there is a need to maintain the reliability of the interconnected electric systems encompassed by the WSCC in a restructured and competitive electric utility industry;

WHEREAS, with the transition of the electric industry to a more competitive structure, it is desirable to have a uniform set of electric system operating rules within the Western Interconnection, applicable in a fair, comparable and non-discriminatory manner, with which all market participants comply; and

WHEREAS, the members of the WSCC, including the Transmission Operator, have determined that a contractual Reliability Management System provides a reasonable, currently available means of maintaining such reliability.

NOW, THEREFORE, in consideration of the mutual agreements contained herein, and other good and valuable consideration, the receipt and sufficiency of which is hereby acknowledged, the Transmission Operator and the Generator agree as follows:

1. PURPOSE OF AGREEMENT

The purpose of this Agreement is to maintain the reliable operation of the Western Interconnection through the Generator's commitment to comply with certain reliability standards.

2. DEFINITIONS

In addition to terms defined in the beginning of this Agreement and in the Recitals hereto, for purposes of this Agreement the following terms shall have the meanings set forth beside them below.

Control Area means an electric system or systems, bounded by interconnection metering and telemetry, capable of controlling generation to maintain its interchange schedule with other Control Areas and contributing to frequency regulation of the Western Interconnection.

FERC means the Federal Energy Regulatory Commission or a successor agency.

Member means any party to the WSCC Agreement.

Party means either the Generator or the Transmission Operator and

Parties means both of the Generator and the Transmission Operator.

Reliability Management System or **RMS** means the contractual reliability management program implemented through the WSCC Reliability Criteria Agreement, the WSCC RMS Agreement, this Agreement, and any similar contractual arrangement.

Western Interconnection means the area comprising those states and provinces, or portions thereof, in Western Canada, Northern Mexico and the Western United States in which Members of the WSCC operate synchronously connected transmission systems.

Working Day means Monday through Friday except for recognized legal holidays in the state in which any notice is received pursuant to Section 8.

WSCC means the Western Systems Coordinating Council or a successor entity.

WSCC Agreement means the Western Systems Coordinating Council Agreement dated March 20, 1967, as such may be amended from time to time.

WSCC Reliability Criteria Agreement means the Western Systems Coordinating Council Reliability Criteria Agreement dated June 18, 1999 among the WSCC and certain of its member transmission operators, as such may be amended from time to time.

WSCC RMS Agreement means an agreement between the WSCC and the Transmission Operator requiring the Transmission Operator to comply with the reliability criteria contained in the WSCC Reliability Criteria Agreement.

WSCC Staff means those employees of the WSCC, including personnel hired by the WSCC on a contract basis, designated as responsible for the administration of the RMS.

3. TERM AND TERMINATION

3.1 Term. This Agreement shall become effective thirty (30) days after the date of issuance of a final FERC order accepting this Agreement for filing without requiring any

changes to this Agreement unacceptable to either Party. Required changes to this Agreement shall be deemed unacceptable to a Party only if that Party provides notice to the other Party within fifteen (15) days of issuance of the applicable FERC order that such order is unacceptable.

3.2 Notice of Termination of WSCC RMS Agreement. The Transmission Operator shall give the Generator notice of any notice of termination of the WSCC RMS Agreement by the WSCC or by the Transmission Operator within fifteen (15) days of receipt by the WSCC or the Transmission Operator of such notice of termination.

3.3 Termination by the Generator. The Generator may terminate this Agreement as follows:
(a) following the termination of the WSCC RMS Agreement for any reason by the WSCC or by the Transmission Operator, provided such notice is provided within forty-five (45) days of the termination of the WSCC RMS Agreement;
(b) following the effective date of an amendment to the requirements of the WSCC Reliability Criteria Agreement that adversely affects the Generator, provided notice of such termination is given within forty-five (45) days of the date of issuance of a FERC order accepting such amendment for filing, provided further that the forty-five (45) day period within which notice of termination is required may be extended by the Generator for an additional forty-five (45) days if the Generator gives written notice to the Transmission Operator of such requested extension within the initial forty-five (45) day period; or
(c) for any reason on one year's written notice to the Transmission Operator and the WSCC.

3.4 Termination by the Transmission Operator. The Transmission Operator may terminate this Agreement on thirty (30) days' written notice following the termination of the WSCC RMS Agreement for any reason by the WSCC or by the Transmission Operator, provided such notice is provided within thirty (30) days of the termination of the WSCC RMS Agreement.

3.5 Mutual Agreement. This Agreement may be terminated at any time by the mutual agreement of the Transmission Operator and the Generator.

4. COMPLIANCE WITH AND AMENDMENT OF WSCC RELIABILITY CRITERIA

4.1 Compliance with Reliability Criteria. The Generator agrees to comply with the requirements of the WSCC Reliability Criteria Agreement, including the applicable WSCC reliability criteria contained in Section IV of Annex A thereof, and, in the event of failure to comply, agrees to be subject to the sanctions applicable to such failure. Each and all of the provisions of the WSCC Reliability Criteria Agreement are hereby incorporated by reference into this Agreement as though set forth fully herein, and the Generator shall for all purposes be considered a Participant, and shall be entitled to all of the rights and privileges and be subject to all of the obligations of a Participant, under and in connection with the WSCC Reliability Criteria Agreement, including but not

limited to the rights, privileges and obligations set forth in Sections 5, 6 and 10 of the WSCC Reliability Criteria Agreement.

4.2 Modifications to WSCC Reliability Criteria Agreement. The Transmission Operator shall notify the Generator within fifteen (15) days of the receipt of notice from the WSCC of the initiation of any WSCC process to modify the WSCC Reliability Criteria Agreement. The WSCC RMS Agreement specifies that such process shall comply with the procedures, rules, and regulations then applicable to the WSCC for modifications to reliability criteria.

4.3 Notice of Modifications to WSCC Reliability Criteria Agreement. If, following the process specified in Section 4.2, any modification to the WSCC Reliability Criteria Agreement is to take effect, the Transmission Operator shall provide notice to the Generator at least forty-five (45) days before such modification is scheduled to take effect.

4.4 Effective Date. Any modification to the WSCC Reliability Criteria Agreement shall take effect on the date specified by FERC in an order accepting such modification for filing.

4.5 Transfer of Control or Sale of Generation Facilities. In any sale or transfer of control of any generation facilities subject to this Agreement, the Generator shall as a condition of such sale or transfer require the acquiring party or transferee with respect to the transferred facilities either to assume the obligations of the Generator with respect to this Agreement or to enter into an agreement with the Control Area Operator in substantially the form of this Agreement.

5. SANCTIONS

5.1 Payment of Monetary Sanctions. The Generator shall be responsible for payment directly to the WSCC of any monetary sanction assessed against the Generator pursuant to this Agreement and the WSCC Reliability Criteria Agreement. Any such payment shall be made pursuant to the procedures specified in the WSCC Reliability Criteria Agreement.

5.2 Publication. The Generator consents to the release by the WSCC of information related to the Generator's compliance with this Agreement only in accordance with the WSCC Reliability Criteria Agreement.

5.3 Reserved Rights. Nothing in the RMS or the WSCC Reliability Criteria Agreement shall affect the right of the Transmission Operator, subject to any necessary regulatory approval, to take such other measures to maintain reliability, including disconnection, which the Transmission Operator may otherwise be entitled to take.

6. THIRD PARTIES

Except for the rights and obligations between the WSCC and Generator specified in Sections 4 and 5, this Agreement creates contractual rights and obligations solely between the Parties. Nothing in this Agreement shall create, as between the Parties or with respect to the WSCC: (1) any obligation or liability whatsoever (other than as expressly provided in this Agreement), or (2) any duty or standard of care whatsoever. In addition, nothing in this Agreement shall create any duty, liability, or standard of care whatsoever as to any other party. Except for the rights, as a third-party beneficiary with respect to Sections 4 and 5, of the WSCC against Generator, no third party shall have any rights whatsoever with respect to enforcement of any provision of this Agreement. Transmission Operator and Generator expressly intend that the WSCC is a third-party beneficiary to this Agreement, and the WSCC shall have the right to seek to enforce against Generator any provisions of Sections 4 and 5, provided that specific performance shall be the sole remedy available to the WSCC pursuant to this Agreement, and Generator shall not be liable to the WSCC pursuant to this Agreement for damages of any kind whatsoever (other than the payment of sanctions to the WSCC, if so construed), whether direct, compensatory, special, indirect, consequential, or punitive.

7. REGULATORY APPROVALS

This Agreement shall be filed with FERC by the Transmission Operator under Section 205 of the Federal Power Act. In such filing, the Transmission Operator shall request that FERC accept this Agreement for filing without modification to become effective on the day after the date of a FERC order accepting this Agreement for filing.

8. NOTICES

Any notice, demand or request required or authorized by this Agreement to be given in writing to a Party shall be delivered by hand, courier or overnight delivery service, mailed by certified mail (return receipt requested) postage prepaid, faxed, or delivered by mutually agreed electronic means to such Party at the following address:

Transmission Operator:

Roni L. Reese
Sr. Contracts Analyst
Market and Product Development
California Independent System Operator Corporation
151 Blue Ravine Road
Folsom, California 95630
Phone: (916) 608-7027
Fax: (916) 608-7292

Generator:

Caithness Blythe II, LLC
Attention: Gail Conboy
Legal Assistant
565 5th Avenue, 29th Floor

New York, NY 10017
Phone: (212) 782-0549
Fax: (212) 921-9239

The designation of such person and/or address may be changed at any time by either Party upon receipt by the other of written notice. Such a notice served by mail shall be effective upon receipt. Notice transmitted by facsimile shall be effective upon receipt if received prior to 5:00 p.m. on a Working Day, and if not received prior to 5:00 p.m. on a Working Day, receipt shall be effective on the next Working Day.

9. APPLICABILITY

This Agreement (including all appendices hereto and, by reference, the WSCC Reliability Criteria Agreement) constitutes the entire understanding between the Parties hereto with respect to the subject matter hereof, supersedes any and all previous understandings between the Parties with respect to the subject matter hereof, and binds and inures to the benefit of the Parties and their successors.

10. AMENDMENT

No amendment of all or any part of this Agreement shall be valid unless it is reduced to writing and signed by both Parties hereto. The terms and conditions herein specified shall remain in effect throughout the term and shall not be subject to change through application to the FERC or other governmental body or authority, absent the agreement of the Parties.

11. INTERPRETATION

Interpretation and performance of this Agreement shall be in accordance with, and shall be controlled by, the laws of the State of California but without giving effect to the provisions thereof relating to conflicts of law. Article and section headings are for convenience only and shall not affect the interpretation of this Agreement. References to articles, sections and appendices are, unless the context otherwise requires, references to articles, sections and appendices of this Agreement.

12. PROHIBITION ON ASSIGNMENT

This Agreement may not be assigned by either Party without the consent of the other Party, which consent shall not be unreasonably withheld; provided that the Generator may without the consent of the WSCC assign the obligations of the Generator pursuant to this Agreement to a transferee with respect to any obligations assumed by the transferee by virtue of Section 4.5 of this Agreement.

13. SEVERABILITY

If one or more provisions herein shall be invalid, illegal or unenforceable in any respect,

it shall be given effect to the extent permitted by applicable law, and such invalidity, illegality or unenforceability shall not affect the validity of the other provisions of this Agreement.

14. COUNTERPARTS

This Agreement may be executed in counterparts and each shall have the same force and effect as an original.

IN WITNESS WHEREOF, the Transmission Operator and the Generator have each caused this Reliability Management System Agreement to be executed by their respective duly authorized officers as of the date first above written.

California Independent System Operator Corporation

By: _____

Name:_____

Title:_____

Date:_____

Caithness Blythe II, LLC

By: _____

Name:_____

Title:_____

Date:_____

Appendix H
To LGIA

(This Appendix is not applicable to the Blythe II Project)

INTERCONNECTION REQUIREMENTS FOR A WIND GENERATING PLANT

Appendix H sets forth requirements and provisions specific to a wind generating plant. All other requirements of this LGIA continue to apply to wind generating plant interconnections.

A. Technical Standards Applicable to a Wind Generating Plant

i. Low Voltage Ride-Through (LVRT) Capability

A wind generating plant shall be able to remain online during voltage disturbances up to the time periods and associated voltage levels set forth in the standard below. The LVRT standard provides for a transition period standard and a post-transition period standard.

Transition Period LVRT Standard

The transition period standard applies to wind generating plants subject to FERC Order 661 that have either: (i) interconnection agreements signed and filed with FERC, filed with FERC in unexecuted form, or filed with FERC as non-conforming agreements between January 1, 2006 and December 31, 2006, with a scheduled In-Service Date no later than December 31, 2007, or (ii) wind generating turbines subject to a wind turbine procurement contract executed prior to December 31, 2005, for delivery through 2007.

1. Wind generating plants are required to remain in-service during three-phase faults with normal clearing (which is a time period of approximately 4 – 9 cycles) and single line to ground faults with delayed clearing, and subsequent post-fault voltage recovery to prefault voltage unless clearing the fault effectively disconnects the generator from the system. The clearing time requirement for a three-phase fault will be specific to the wind generating plant substation location, as determined by and documented by the Participating TO. The maximum clearing time the wind generating plant shall be required to withstand for a three-phase fault shall be 9 cycles at a voltage as low as 0.15 p.u., as measured at the high side of the wind generating plant step-up transformer (i.e. the transformer that steps the voltage up to the transmission interconnection voltage or “GSU”), after which, if the fault remains following the location-specific normal clearing time for three-phase faults, the wind generating plant may disconnect from the transmission system.

2. This requirement does not apply to faults that would occur between the wind generator terminals and the high side of the GSU or to faults that would result in a voltage lower than 0.15 per unit on the high side of the GSU serving the facility.

3. Wind generating plants may be tripped after the fault period if this action is intended as part of a special protection system.

4. Wind generating plants may meet the LVRT requirements of this standard by the performance of the generators or by installing additional equipment (e.g., Static VAr Compensator, etc.) within the wind generating plant or by a combination of generator performance and additional equipment.

5. Existing individual generator units that are, or have been, interconnected to the network at the same location at the effective date of the Appendix H LVRT Standard are exempt from meeting the Appendix H LVRT Standard for the remaining life of the existing generation equipment. Existing individual generator units that are replaced are required to meet the Appendix H LVRT Standard.

Post-transition Period LVRT Standard

All wind generating plants subject to FERC Order No. 661 and not covered by the transition period described above must meet the following requirements:

1. Wind generating plants are required to remain in-service during three-phase faults with normal clearing (which is a time period of approximately 4 – 9 cycles) and single line to ground faults with delayed clearing, and subsequent post-fault voltage recovery to prefault voltage unless clearing the fault effectively disconnects the generator from the system. The clearing time requirement for a three-phase fault will be specific to the wind generating plant substation location, as determined by and documented by the Participating TO. The maximum clearing time the wind generating plant shall be required to withstand for a three-phase fault shall be 9 cycles after which, if the fault remains following the location-specific normal clearing time for three-phase faults, the wind generating plant may disconnect from the CAISO Controlled Grid. A wind generating plant shall remain interconnected during such a fault on the CAISO Controlled Grid for a voltage level as low as zero volts, as measured at the high voltage side of the wind GSU.

2. This requirement does not apply to faults that would occur between the wind generator terminals and the high side of the GSU.

3. Wind generating plants may be tripped after the fault period if this action is intended as part of a special protection system.

4. Wind generating plants may meet the LVRT requirements of this standard by the performance of the generators or by installing additional equipment (e.g., Static VAr Compensator) within the wind generating plant or by a combination of generator performance and additional equipment.

5. Existing individual generator units that are, or have been, interconnected to the CAISO Controlled Grid at the same location at the effective date of the Appendix H LVRT Standard are exempt from meeting the Appendix H LVRT Standard for the remaining life of the existing generation equipment. Existing individual generator units that are replaced are required to meet the Appendix H LVRT Standard.

ii. Power Factor Design Criteria (Reactive Power)

A wind generating plant shall operate within a power factor within the range of 0.95 leading to 0.95 lagging, measured at the Point of Interconnection as defined in this LGIA in order to maintain a specified voltage schedule, if the Interconnection System Impact Study shows that such a requirement is necessary to ensure safety or reliability. The power factor range standard can be met by using, for example, power electronics designed to supply this level of reactive capability (taking into account any limitations due to voltage level, real power output, etc.) or fixed and switched capacitors, or a combination of the two, if agreed to by the Participating TO and CAISO. The Interconnection Customer shall not disable power factor equipment while the wind plant is in operation. Wind plants shall also be able to provide sufficient dynamic voltage support in lieu of the power system stabilizer and automatic voltage regulation at the generator excitation system if the Interconnection System Impact Study shows this to be required for system safety or reliability.

iii. Supervisory Control and Data Acquisition (SCADA) Capability

The wind plant shall provide SCADA capability to transmit data and receive instructions from the Participating TO and CAISO to protect system reliability. The Participating TO and CAISO and the wind plant Interconnection Customer shall determine what SCADA information is essential for the proposed wind plant, taking into account the size of the plant and its characteristics, location, and importance in maintaining generation resource adequacy and transmission system reliability in its area.

ATTACHMENT 4

FACILITIES STUDY

CAITHNESS – BLYTHE II, LLC.
BLYTHE ENERGY II GENERATION PROJECT

SOUTHERN CALIFORNIA EDISON COMPANY
FACILITIES STUDY

SOUTHERN CALIFORNIA
EDISON
An *EDISON INTERNATIONAL* Company

February 2, 2007

Prepared by:

Edgardo A. Romero

Approved by:

Charles E. Nieto

Table of Contents

	Description	Page
I.	Executive Summary	3
II.	System Impact Study Results	3
III.	Facilities Study Assumptions	7
IV.	Facilities Study Scope and Cost Estimate	7
IV – A	Facilities Study Scope	7
IV – B	Facilities Study Cost Estimate	10
V.	Project Timeline	10
VI.	Conclusions	11
VII.	Exhibits	
	Exhibit A	System Impact Study Executive Summary and Overload Tables
	Exhibit B	CAISO Letter to SCE (Robert Lugo) dated 05/17/06
	Exhibit C	Overloads Matrix and Proposed Solutions
	Exhibit D	Midpoint Substation
	Exhibit E	Telecommunication Channels for Case B
	Exhibit F	Facilities Study Scope – Additional Detail
	Exhibit G	Cost Summary

I. Executive Summary

Caithness Blythe II (BEPII) applied to the California Independent System Operator (CAISO) for interconnection of their 520MW Blythe Energy II Generation Project (Blythe II) to the CAISO Grid under the present Transmission Owner (TO) Tariff.

BEPII proposes to construct the Blythe II Generating Facility in Blythe, California and interconnect the Project to the CAISO Grid at the SCE Midpoint Substation 500kV Bus.

The interconnection would be provided by a new seven mile 500kV Generation Tie Line, from the Blythe II Generating Facility to Midpoint Substation. The 500kV Gen Tie Line will be installed, owned operated and maintained by BEPII and terminated at a dedicated double breaker position at Midpoint Substation.

For the purpose of this Study this line will be called the Blythe – Midpoint 500kV Generation Tie Line.

Midpoint Substation is a proposed SCE 500kV Substation located adjacent to the SCE Devers – Palo Verde (DPV1) and Devers – Harquahala (DPV2) 500 kV Transmission Lines Right of Way. Both the DPV1 and DPV2 500kV T/L's will be looped into Midpoint Substation.

SCE prepared a System Impact Study (SIS) dated March 15, 2006 to analyze the impact of the 520MW Project to the SCE Transmission System.

CAISO reviewed the SIS and transmitted comments and requested SCE to proceed with the Facilities Study in a letter to SCE (Robert Lugo) dated May 17, 2006.

FOR ADDITIONAL DETAIL REFER TO THE FOLLOWING EXHIBITS:

- **EXHIBIT A: SIS – EXECUTIVE SUMMARY & OVERLOAD TABLES**
- **EXHIBIT B: CAISO LETTER TO SCE (ROBERT LUGO) DATED 05/17/06.**

II. System Impact Study Results

The SIS analyzed the SCE System for the following four different alternatives:

Alternative 1: With DPV2 in service and Natural Flow.

Alternative 2: With DPV2 in service and Increased Line Compensation.

Alternative 3: Without DPV2 in service and Natural Flow.

Alternative 4: Without DPV2 in service and Increased Line Compensation.

During discussions conducted with Blythe II prior to the preparation of the Facilities Study it was agreed that the Facilities Study would only address Alternative 1.

This means the Facilities Study addresses:

- **System with DPV2 and associated Devers – Valley No.2 500kV T/L on line**
- **System under Natural Flow**

Alternative 2 may be addressed at a later date.

Alternatives 3 and 4 were addressed on the SIS for information only and will not be addressed on any Facilities Study.

The SIS concluded that the present SCE System is not adequate to support the additional generation and recommended that a Facilities Study be prepared to show the scope and cost

estimate of the new interconnection facilities and system upgrades required to support the proposed interconnection.

The SIS concluded that Blythe II aggravates one pre-existing Base Case overload triggered by an earlier interconnection placed ahead of the Project in the Application Queue and also either triggers new or aggravates pre-existing contingency overloads as follows:

Base Case Overload:

Devers – Valley 500kV T/L **Rated 3000A Loaded to 3340A (111%)**

Pre-existing overload aggravated by Blythe II.

Proposed Solution:
Upgrade line rating to 3950A by upgrading both Line Positions at Devers and Valley Substation to 4000A Rating.

This upgrade requires the following work:

a. Replace all equipment and conductors at Devers Sub. with 4000A Rated elements.
b. Install a new 4000A Outdoor Line Position at Valley Sub.
c. Relocate the existing line termination at Valley Sub. from the GIS Building to the new Outdoor 500kV Line Position Switchyard.

NOTE :
The Devers 500kV Line Position at Valley Substation needs to be relocated from the GIS Switchgear because the existing GIS equipment can't be upgraded to 4000A Rating.

For this reason, the upgrade of the line requires the installation of a new 4000A Rated Line Position at the existing Outdoor 500kV Switchyard.

Contingency Overloads:

1. Devers – Valley 500kV T/L **N – 1 Rating: 3000A (100%)**

Loaded from 3120A to 3630A under eleven N – 1 contingencies.

Loaded from 3300A to 3900A under twenty four N – 2 contingencies.

One new N – 1 overload triggered by Blythe II.

Ten pre-existing N – 1 and twenty four pre-existing N – 2 overloads aggravated by Blythe II.

Proposed Solution:
All N – 1 and N – 2 contingency overloads are eliminated by the upgrade of the line to 3950A Rating required to resolve the Base Case overload.

2. Devers – Midpoint No.2 500kV T/L **N – 1 Rating: 3650A (135%)**

The N - 1 Line Rating is limited by the California 500kV Line Series Capacitor Bank.

Loaded to 4130A under one N – 1 contingency.

Pre-existing overload aggravated by Blythe II.

Proposed Solution:
Upgrade the 2700A/3650A California 500kV Line Series Capacitor Banks on both the DPV1 and DPV2 500kV T/L's to 4000A/5400A Rating.

NOTE: Although the overload occurs only on the DPV2 500kV T/L, both Capacitor Banks should be upgraded to keep equal ratings on the two lines which parallel each other.

3. **Eldorado – Moenkopi 500kV T/L** **N – 1 Rating: 1900A (100%)**

   The N - 1 Line Rating is limited by the 500kV Line Series Capacitor Bank.

   Loaded to 2025A under one N – 1 contingency.

   Pre-existing overload aggravated by Blythe II.

   Proposed Solution:
   Install a Special Protection Scheme (SPS - 1) to trip the Blythe II Project under the N – 1 contingency caused by the outage of the Devers – Midpoint No.2 500kV T/L.

   This SPS – 1 would also eliminate the N – 2 overload caused by the simultaneous outages of both the Etiwanda – San Bernardino and Devers – Vista 230kV T/L's.

4. **San Bernardino – Vista 230kV T/L** **N – 1 Rating: 2850A (115%) - NOTE**
   N – 2 Rating: 3350A (135%) - NOTE

   NOTE: **N – 1 and N – 2 Rating shown are after the proposed line upgrade to 2-1033KCMIL ACSR Conductor considered under SCE System Upgrades.**

   Loaded to 3810A under one N – 1 contingency.

   Loaded to 4430A under one N – 2 contingency.

   New overloads triggered by Blythe II.

   Proposed Solutions:
   Although the line is planned to be upgraded to N – 1 = 3710A and N - 2 = 4360A by replacing the 2-1033KCMIL ACSR Line Conductor with 2-1590KCMIL ACSR, which is the largest 230kV Conductor presently used in the SCE Transmission System, this upgrade is still not adequate.

   There are two alternative proposed solutions as follows:

   ALT. 1: Advance the installation of the proposed Devers –Valley No.2 500kV T/L.

   ALT. 2: Install a new San Bernardino – Vista No.2 230kV T/L

   During internal discussions with Transmission Engineering and Corporate Real Estate conducted during the preparation of the Facilities Study it was agreed that the Facilities Study would only address Alternative 1.

   In addition, install a Special Protection Scheme (SPS - 1) to trip the Blythe II Project under the N – 1 contingency caused by the outage of the Etiwanda – San Bernardino 230kV T/L.

   This SPS – 1 would also eliminate the N – 2 overload caused by the simultaneous outages of both the Etiwanda – San Bernardino and Devers – Vista 230kV T/L's.

5. **Devers – Vista No.1 230kV T/L** **N – 1 Rating: 2850A (115%) - NOTE**
6. **Devers – Vista No.2 230kV T/L** **N – 1 Rating: 2850A (115%) - NOTE**

   NOTE: **N – 1 Rating shown are after the proposed line upgrade to 2-1033KCMIL ACSR Conductor considered under SCE System Upgrades.**

   Loaded to 2900A under one N – 1 contingency.

   New overload triggered by Blythe II.

   Proposed Solution:
   None Required – The installation of the new Devers – Valley No.2 500kV T/L addressed on Case 4 above eliminates these overloads.

7. **Devers Sub. 500/230kV No.1AA Tr. Bk. N – 1 Rating: 1230MVA (110%)**
8. **Devers Sub. 500/230kV No.2AA Tr. Bk. N – 1 Rating: 1230MVA (110%)**

   Loaded to 1300MVA under one N – 1 contingency.

   Pre-existing overloads aggravated by Blythe II.

   Proposed Solution:
   None Required - There is an existing SPS in place at Devers Substation which opens the banks circuit breakers and gets both transformers out of service under a bank overload situation. The existing SPS eliminates the N – 1 overloads.
9. **Mira Loma – Vista No.2 230kV T/L N – 1 Rating: 2650A (115%)**

   NOTE: This line will become the Mira Loma – Vista 230kV T/L after the existing Mira Loma – Vista No.1 is looped into the new Wildlife Substation (Formerly Jurupa Sub.)

   The N - 1 Line Rating is limited to 2650A by the 2-1033KCMIL ACSR Conductors on the Vista Substation Line Drops.

   Loaded to 2800A under one N – 1 contingency.

   Pre-existing overload aggravated by Blythe II.

   Proposed Solution:
   Replace the 2-1033KCMIL ACSR Line Drops at Vista Substation with a new 2-1590KCMIL ACSR with N – 1 Rating of 3450A to restore the Line N – 1 Rating to 3000A (N – 1 Rating limited by existing 3000A Wave Traps at both ends of the line).
10. **Etiwanda – Vista 230kV T/L N – 1 Rating: 2000A (100%)**

    The 2-1033KCMIL ACSR Line Conductor is rated N = 2480A and N – 1 = 2850A (115%)

    The N - 1 Line Rating is limited to 2000A by the Wave Trap at Vista Substation.

    Loaded to 2080A under one N – 1 contingency.

    New overload triggered by Blythe II.

    Proposed Solution:
    Replace the 2000A Wave Trap at the Etiwanda Gen. Sta. 230kV Switchyard with a new 3000A Rated to restore the Line N – 1 Rating to 2850A.

FOR ADDITIONAL DETAIL REFER TO THE FOLLOWING EXHIBITS:

- **EXHIBIT C: OVERLOADS MATRIX AND PROPOSED SOLUTIONS**

In addition the SIS identified the following three 500kV, twelve 230kV, one 161kV and two 115kV locations where the new generation causes the Three-Phase and / or the Single Phase to Ground Short Circuit Duties to go up by 0.1kA or more as a result of the Project and recommended that the circuit breakers at these locations be evaluated:

500kV:

Lugo	Serrano	Mira Loma

230kV:

Barre	Chino	Devers	Etiwanda	Lewis	Mirage
Mira Loma	Olinda	San Bernardino	Serrano	Vincent	Vista

161kV:
Blythe

115kV
Devers Valley

The SIS determined that a Facilities Study would be required to determine the scope of work and cost estimates for the Interconnection Facilities and all the required System Upgrades.

III. Facilities Study Assumptions

A. The installation of the new Blythe – Midpoint 500kV Generation Tie Line will be provided by BEPII and is not included in the Facilities Study.

B. All required ISO metering equipment at the Blythe II Generating Facility will be provided by BEPII and is not included in the Facilities Study.

C. The installation of the following Line Protection Relays at The Blythe II Generating Facility termination of the Blythe – Midpoint 500kV Generation Tie Line will be specified by SCE and provided by BEPII and are not included in the Facilities Study.

- One GE D60 Hybrid POTT [Digital Channel]
- One SEL-311L Line Current Differential Relay [Digital Channel]
- One GE L90 Line Current Differential [Digital Channel]
- Two RFL 9745 Tele-protection channel DTT's

D. The installation of the following SPS related relays at the Blythe II Generating Facility will be installed by BEPII and are not included in the Facilities Study:

- Two G.E. N60 Line Monitoring Relays
- One SEL-2407 Satellite Synchronized Clock

E. The installation of one of the two required Telecommunications circuits and corresponding interface equipment to support the Blythe – Midpoint 500kV Generation Tie Line Protection Relays, the SPS – 2 related relays and the Power Management circuit required for the RTU at the Generating Facility will be provided by SCE and it is included in the Facilities Study.

F. The additional Telecommunications circuit, required to provide the diverse path to support the Blythe – Midpoint 500kV Generation Tie Line Protection Relays, will be provided by BEPII by installing Optical Ground Wire (OPGW) on the 500kV Generation Tie Line and is not included in the Facilities Study.

G. The required Remote Terminal Unit (RTU) to be installed at the Blythe II Generating Facility will be provided by SCE and it is included in the Facilities Study.

IV. Facilities Study Scope and Cost Estimate

IV – A Facilities Study Scope

Pursuant to FERC's orders 2006-A (Small Generators) and 2003-A (Large Generators) all Facilities Studies are required to provide the customer with its "maximum possible funding exposure", which shall include the costs of upgrades that are reasonably allocable to the Interconnection Customer at the time the estimate is made, and the costs of any upgrades not yet constructed that were assumed in the interconnection studies for the Interconnection Customer but are, at the time of the estimate, an obligation of an entity other than the Interconnection Customer."

To comply with the FERC orders, the Scope of Work and Cost Estimate for all elements required for the interconnection are presented for the following two cases:

CASE A: All facilities required exclusively by the Project

And

CASE B: All additional facilities that may be required by the Project

The facilities included on Case B are those additional facilities required to remedy situations caused by earlier Projects, placed ahead of the Project in the Application Queue, and are expected to be implemented by them.

However, in the event that any of these earlier Projects withdraws their Application, the Project may become responsible for any or all of these additional facilities.

CASE A Elements:
This case considers that the new Midpoint Substation and all the related transmission and telecommunication facilities required by the earlier interconnection TOT 101 are in place.

1. Blythe – Midpoint 500kV Gen. Tie Line: Install one 500kV Structure inside the Midpoint Substation perimeter fence and all required conductors and OPGW.
2. Midpoint Substation: Install a new 500kV Line Position to terminate the Blythe – Midpoint 500kV Generation Tie Line.
3. Etiwanda Gen. Station: Replace the 2000A Wave Trap on the Vista 230kV line Position with 3000A Rated.
4. Etiwanda Gen. Station: Install SPS – 2 Relays.
5. San Bernardino Gen. Station: Install SPS – 2 Relays.
6. Telecommunications: Install two new fiber optic channels between the Blythe II Generating Facility and the earlier TOT 101 Telecommunications Room to provide one of the two channels required between Midpoint Substation and the Blythe II Generating Facility to support the Blythe – Midpoint 500kV Generation Tie Line Protection Relays. Also install interface terminal equipment at Midpoint Substation, the Blythe II Generating Facility and the TOT 101 Telecommunications Room. This connection would also provide the required telecommunications link for the new RTU at the Blythe II Generating Facility. The remaining channel required for line protection will be provided by BEPII by installing OPGW on the new 500kV Generation Tie Line.

   Also install required interface terminal equipment at Etiwanda and San Bernardino Generating Stations to support the SPS – 2 related relays.
7. Power System Control: Install new Remote Terminal Units (RTU) at the Blythe II Generating Facility and expand existing RTU at Midpoint Sub. to install the additional points required for the new Blythe – Midpoint 500kV Generation Tie Line.

CASE B Elements:
This case considers the possible scenario that the earlier interconnection TOT 101 did not materialize and, therefore, transfers the responsibility of the station and all related transmission and telecommunication facilities to BEPII.

1. DPV1 500kV T/L: Loop line into Midpoint Sub.
2. DPV2 500kV T/L: Loop line into Midpoint Sub.

3. Devers – Valley No.1 500kV T/L: Relocate the Valley Sub. termination from the existing GIS Building to a new Outdoor Line Position.
4. Devers – Valley No.2 500kV T/L: Install approximately 42 Miles of new 500kV line using single lattice structures and 2-2156KCMIIL ACSR Conductors.
5. Midpoint Substation: Install a new 500kV Interconnection Facility to loop the DPV1 and DPV2 500kV T/L's and provide space for an additional 500kV Line Position to terminate the future Blythe – Midpoint 500kV Generation Tie Line.
6. Devers Substation: Upgrade the Valley No.1 500kV Line Position to 4000A Rating and install a new 4000A 500kV Line Position to terminate the new Valley No.2 500kV T/L.
7. Valley Substation: Install two new outdoor 4000A 500kV Line Positions to terminate the relocated Devers No.1 and the new Devers No.2 500kV T/L's.
8. Vista Sub: Replace the 2-1033KCMIL ACSR Line Drops on the Mira Loma 230kV line Position with 2-1590KCMIL ACSR.
9. Devers Substation: Install SPS – 1 Relays.
10. Midpoint Substation: Install SPS – 1 Relays.
11. California DPV1 500kV Series Capacitors: Upgrade to 4000A / 5400A Ratings.
12. California DPV2 500kV Series Capacitors: Upgrade to 4000A / 5400A Ratings.
13. West of Devers Upgrades: Upgrade the West of Devers 230kV T/L's by replacing a total of approximately 176 Circuit - Mile of existing conductors on the Devers – Vista Nos. 1 & 2 and Devers – San Bernardino Nos. 1 & 2 230kV T/L's with new 2-1033KCMIL and upgrading terminal equipment at the Devers, Vista and San Bernardino 230kV Switchyards as required. This work also requires the replacement and upgrades of 230kV circuit breakers at several locations.
14. Telecommunications: Install all required channels and interface terminal equipment to support the Line Protection Relays required after looping the DPV1 and DPV2 500kV T/L's into Midpoint Substation Relays and the interface terminal equipment at Devers and Midpoint Substations to support the SPS – 1 related relays.

Cases A <u>and / or</u> B (See results of CB evaluation below)

- Evaluate circuit breakers (CB's) short circuit capability at all locations where the Three-Phase and/or Single Phase to Ground SCD's were increased by 0.1kA or more as a result of the Project. The evaluation included a total of thirty four 500kV CB's at three locations, one hundred and seventy eight 230kV CB's at twelve locations one 161kV at one location and fifty two 115kV CB's at two locations.

  The circuit breaker evaluation results are as follows:

  CASE A: All circuit breakers are adequate – No replacements or upgrades required.

  CASE B: The following replacements and upgrades are required:

Devers Substation	Replace eight and upgrade two 230kV CB's
Vincent Substation	Upgrade one 230kV CB

  NOTE: **The 230kV CB's identified above are already included in the West of Devers Upgrades.**

FOR ADDITIONAL DETAIL REFER TO THE FOLLOWING EXHIBITS:

- **EXHIBIT D: MIDPOINT SUBSTATION.**
- **EXHIBIT E: TELECOMMUNICATION CHANNELS FOR CASE B.**
- **EXHIBIT F: FACILITIES STUDY SCOPE – ADDITIONAL DETAIL.**

IV – B Facilities Study Cost Estimate

CASE A Identifies the cost of all facilities that are required exclusively by the Project.

CASE B Identifies the cost of all upgrades required that were triggered by earlier Applicants placed ahead of the Project in the Application Queue.

In the event that any Applicant, presently placed ahead of the Project in the Application Queue, withdraws its Application, the system would need to be re-evaluated. The new evaluation may conclude that the Project would now trigger any of these upgrades and would then become responsible for some or all of the upgrades identified on Case B.

The total estimated cost of all elements of the interconnection as identified above in the Facilities Study Scope is as follows:

CASE A:	$ 12,057,000
CASE B (May be added to Case A):	$294,571,000
POSSIBLE MAXIMUM COST EXPOSURE:	$306,628,000

SEE EXHIBIT G: COST SUMMARY.

V. Project Timeline

Considering the following facts:

1. The Devers – Valley No.2 500kV T/L must be in service before the Blythe II Project is interconnected to the CAISO Grid.
2. The estimated completion date for the Devers – Valley No.2 500kV T/L is "Third Quarter of 2009"
3. Assuming the land for Midpoint Substation will be provided by BEPII, the installation of the station and the related looping of the DPV1 and DPV2 500kV T/L's plus the required telecommunications channels would require approximately two years (After execution of the applicable agreements and following SCE's receipt of any permits required to be obtained by SCE). This time frame is subject to final verification of available resources by SCE.

NOTE:
An Operational Study may be required to determine whether any of the upgrades addressed on Case B would be needed prior the Blythe II Project coming on line.

VI. Conclusions

A. The estimated cost for the Interconnection is approximately $12,057,000 for Case A with the potential additional cost of $294,571,000 for Case B for a total Maximum Exposure of $306,628,000.

The costs indicated in Section IV above are shown in 2009 Dollars and are not firm. These are preliminary estimates only based on conceptual engineering and system unit costs, and are subject to change based on the final design and actual material costs. This Facilities Study and cost estimates as presented are valid for a period of 90 days.

B. The estimated Project Cost will be reconciled to actual costs upon closure of the subject work orders. The necessary billing adjustments will be made in accordance with the Interconnection Agreement.

EXHIBIT A

SYSTEM IMPACT STUDY EXECUTIVE SUMMARY and LINE OVERLOAD TABLES

CAITHNESS – BLYTHE II, LLC
BLYTHE II GENERATION SYSTEM IMPACT STUDY

SYSTEM PLANNING STUDY

March 15, 2006

SOUTHERN CALIFORNIA
EDISON

Prepared by
David Franklin

Southern California Edison Company

Patricia L Arons

EXECUTIVE SUMMARY

INTRODUCTION

Caithness Blythe II ("BEPII") applied to the California Independent System Operator ("ISO") for interconnection pursuant to the ISO Tariff. BEPII proposes to construct the Blythe Energy Project II located in Blythe, California ("Project") and interconnect the Project to the 500 kV switchrack at a new Southern California Edison Company ("SCE") Substation ("Midpoint Substation") adjacent to SCE's Devers - Palo Verde 500 kV (DPV1) transmission line to transmit 520 MW to the ISO controlled grid.

Southern California Edison Company ("SCE") performed a System Impact Study for the Project as requested by BEPII. The purpose of this study is to assess the Project's impact on SCE's transmission system, and to conduct other analysis to determine if the proposed Project requires transmission system modifications. This is needed in order to maintain system reliability in accordance with CA-ISO Planning Criteria. The study includes assessments of power flow and voltages (steady-state and post-transient), short circuit duties, and transient stability.

Results of the System Impact Study will be used as the basis to determine the Project cost allocation for facility upgrades in the Facilities Study. The study accuracy and results for the assessment of the system adequacy are contingent on the accuracy of the technical data provided by BEPII.

The study was performed with 2009 heavy autumn load forecast with maximum autumn EOR/WOR power flow and includes projects queued ahead of this Project. The autumn case was selected because historically during autumn seasonal conditions the Arizona – California system is most heavily stressed. Several regional generation patterns were modeled, including maximized generation offset in the LA Basin to fully stress DPV1.

The following report provides detailed study assumptions and conditions of the system in which the study was conducted. Furthermore, results of Power Flow (steady state and post-contingency), Post-Transient Voltage Stability, Transient Stability, and Short-Circuit Duty assessments were completed for this study. Complete details of the study scenarios are attached (Attachment 1).

Four scenarios were modeled to simulate the Project with and without the Devers – Palo Verde 500kV #2 transmission line project (DPV2) Power flow studies were conducted under 2009 heavy autumn conditions. Further description of case assumptions follows:

Case 1: 2009 Heavy Autumn Pre-Project case without the DPV2;

Case 2: 2009 Heavy Autumn Pre-Project case with DPV2;

Case3: 2009 Heavy Autumn Post-Project case without DPV2 (Case 1 plus Project interconnection to Midpoint substation, natural flow case);

Case 4: 2009 Heavy Autumn Post-Project case without DPV2 and with increased series compensation on DPV1 to deliver an additional 520MW to the Devers 500kV substation (Case 3 with approximately 64% series compensation on the DPV1 500kV line);

Case 5: 2009 Heavy Autumn Post-Project case with DPV2 (Case 2 plus Project interconnection to Midpoint substation, natural flow case);

Case 6: 2009 Heavy Autumn Post-Project case with DPV2 and with increased series compensation on both DPV1 and DPV2 to deliver an additional 520MW to the Devers 500kV substation (Case 5 with approximately 68% series compensation on the DPV1 500kV line and 70% series compensation on the DPV2 500kV line)

SUMMARY RESULTS:

Without DPV2:

The Project adversely affects SCE's transmission system. The addition of the Project results in new base case overloads on the Devers – Vista #1 and #2 230 kV and Midpoint – Devers 500 kV transmission line series capacitors for both natural flow and compensation level increase, and increases an overload triggered by TOT101 on the Devers – San Bernardino 230 kV transmission line.

Congestion management may be an alternative to mitigate these overloads if the CA-ISO deems the extent and duration of the congestion to be acceptable.

If the DPV2 transmission line project does not materialize, N-1 overloads on the West-of-Devers 230 kV transmission lines were identified on the Devers – Vista #1 & #2 230 kV and the Devers – San Bernardino #1 & #2. The Project compounds N-1 overloads that were previously identified with projects ahead of the TOT101 transmission line project, which are increased for both the natural flow and compensation increase cases.

With DPV2

For base case conditions, the Project results in base case overloads on the Devers – Valley 500kV transmission line GIS riser and wavetrap. The Project compounds an overload triggered by the TOT101 project. The overload is increased for both the natural flow and compensation increase.

For the N-1 loss of Etiwanda – San Bernardino 230 kV transmission line, the Project results in an overload on the San Bernardino – Vista 230 kV transmission line for both natural flow and series compensation increase.

For the loss of either Midpoint – Devers 500 kV #1 or #2 transmission line, the loading on the Midpoint – Devers #1 or #2 series capacitors exceed the emergency thermal limitation of 3645A.

For the N-1 loss of Devers – Valley 500 kV transmission line, the Devers 500/230 kV transformer banks exceed the thermal limitations of 110% of the normal rating.

For the loss of the Devers – Valley 500 kV Transmission Line, the loading on the Etiwanda – Vista 230 kV transmission line exceeds the thermal capabilities of the line riser, disconnects, and wavetrap of 2000A.

For the loss of the Devers – Valley 500 kV Transmission Line, the loading on the Mira Loma – Vista 230 kV transmission line exceeds the thermal capabilities of the line risers and disconnects of 2000A.

For the loss of the Devers – Valley 500 kV transmission line, the loading on the Devers – Vista 230 kV transmission lines exceed its thermal limitation of 2850A.

Series Compensation Increase:

To inject 520MW into the Devers 500kV Substation, via Midpoint – Devers 500 kV transmission line, without DPV2, the series compensation increased to 64% on DPV1.

To inject 520MW into the Devers 500kV Substation, via Midpoint – Devers 500 kV transmission line, with DPV2, the series compensation increased to 68% on DPV1 and 70% on DPV2.

TRANSIENT STABILITY

No problems were identified for transient stability analyses.

POST TRANSIENT STABILITY

The Project does not result in large changes to the voltage stability characteristics of SCE's system. All single contingencies were within the 7% post-transient limit for percent voltage change. All double contingencies were well within the 10% post-transient limit for percent voltage change.

SHORT CIRCUIT DUTY

Three Phase Short Circuit Duty:

Evaluate the need for circuit breaker replacement at 13 bulk power substations.

Single Line to Ground Short Circuit:

Evaluate the need for circuit breaker replacement at 11 bulk power substations.

CONCLUSIONS

The following are recommended upgrades to mitigate the identified overloads:

1. Review feasibility and develop costs associated with upgrades to mitigate base case overloads

Without DPV2

If the DPV2 transmission line project does not materialize, then develop the costs to reconductor the west-of-Devers 230 kV transmission lines; Devers – Vista #1 & #2 and Devers – San Bernardino #1 230 kV transmission lines, and Midpoint – Devers 500 kV transmission lines for both the natural flow and the compensation level increase scenarios. The Project also compounds a base case overload on the Devers – San Bernardino 230 kV transmission line that was triggered by TOT101.

Although upgrading the Midpoint – Devers 500 kV series capacitor to accommodate the additional flow on DPV1 would mitigate thermal overloads, further engineering evaluation during the facility study would need to be performed to determine if there are any clearance limitations for base case.

Develop the cost for the series compensation increase. A study has been performed for series compensation increase up to 70% and confirmed that Thyristor Controlled Series Capacitors could be used to mitigate SSR concerns. Although a SSR study was performed with 70% series compensation on DPV1 and DPV2, further studies are required with the proposed new Midpoint 500 kV Substation. The series capacitors require a 4000A rating.

With DPV2

Develop the cost to upgrade the Devers – Valley 500kV transmission line GIS riser and wavetrap to 4000A

Develop the cost for increasing the series compensation level on DPV1 and DPV2.

2. Review feasibility and develop costs associated with upgrades to mitigate N-1 contingency overloads

Without DPV2

If the DPV2 transmission line project does not materialize, then develop the costs to reconductor the west-of-Devers 230 kV transmission lines; Devers – Vista #1 & #2 230 kV and Devers – San Bernardino #1 & #2. The above base case West-of-Devers 230kV mitigation alternatives would also mitigate the N-1 overloads on the Devers – Vista #1 & #2 and Devers – San Bernardino #1 230kV transmission lines.

The base case overload mitigation plan for the Midpoint – Devers 500kV series capacitors would also mitigate the N-1 overload on this capacitor.

Although upgrading the Midpoint – Devers 500 kV series capacitor to accommodate the additional flow on DPV1 would mitigate thermal overloads, further engineering evaluation during the facility study would need to be performed to determine if there are any clearance limitations for base case.

Upgrade the Devers – Valley GIS riser and wavetrap.

With DPV2

Develop the costs to construct a second San Bernardino – Vista 230 kV transmission line, or

Develop the costs to accelerate the second Devers – Valley 500 kV transmission line project as an alternative to mitigate N-1 overloads on the San Bernardino – Vista #2 230 kV transmission line, or evaluate potential future SCE facility upgrades.

Develop the cost to upgrade the series capacitors to accommodate 4 N-1 500 Amps.

Develop the cost to install a third Devers 500/230 kV transformer bank.

Develop the cost to reconductor the Devers – Vista #1 & #2 230 kV lines to 2B-1590

Develop the cost to upgrade the Etiwanda – Vista 230 kV transmission line disconnects, line risers, and wavetrap at the Etiwanda Substation to 3000A.

Develop the cost to upgrade the Mira Loma – Vista 230 kV transmission line disconnects and risers to 3000A.

3. Review feasibility and develop costs associated with upgrades to mitigate N-2 contingency overloads

The base case or N-1 mitigation plans will mitigate the N-2 overloads.

4. Short Circuit Duty

Three Phase Short Circuit Duty

Evaluate the need for circuit breaker replacement at 13 bulk power substations.

		Min	PRE CASE		POST CASE		
Bus Name	Bus KV	Rating	X/R	KA	X/R	KA	DELTA KA
LUGO	500	37.8	21.2	42.1	21.1	42.2	0.1
MIRALOMA	500	38.4	24.2	32.6	24.1	32.7	0.1
SERRANO	500	40	23.5	27.8	23.4	27.9	0.1
BARRE	230	45.6	18.5	48.9	18.5	49	0.1
CHINO	230	50	17.3	46.7	17.2	46.8	0.1

DEVERS	230	33	20.8	42.4	20.8	43.3	0.9
ETIWANDA	230	34	20.3	40	20.2	40.1	0.1
MIRAGE	230	25	9.5	15.1	9.5	15.2	0.1
MRLOMA E	230	63	22.8	53.5	22.7	53.6	0.1
MRLOMA W	230	63	20.6	49.3	20.5	49.4	0.1
OLINDA	230	37.7	14	26.9	13.9	27	0.1
SANBRDNO	230	50	21.9	38	21.8	38.1	0.1
SERRANO	230	63	23.5	51.6	23.5	51.7	0.1
VISTA	230	40	19.8	45.4	19.8	45.6	0.2
BLYTHESC	161	31.5	12.4	19.6	12.6	19.8	0.2
DEVERS	115	23	46	24.1	46.3	24.2	0.1
VALLEY A	115	0	53.4	17.6	53.3	17.7	0.1
VALLEY C	115	0	50.6	17.6	50.5	17.7	0.1

Single Line to Ground Short Circuit

Evaluate the need for circuit breaker replacement at 11 bulk power substations.

		Min	PRE CASE		POST CASE		
Bus Name	Bus KV	Rating	X/R	KA	X/R	KA	DELTA KA
Barre	230	45.6	13.1	42.4	13.1	42.5	0.1
Blythe	161	31.5	12.3	19.7	12.3	20	0.3
Chino	230	50	12.8	38.9	12.7	39	0.1
Devers	230	33	16.2	46	16.3	46.8	0.8
Lewis	230	45.6	15.4	39.1	15.4	39.2	0.1
Mira Loma	525	38.4	14.8	30.1	14.8	30.2	0.1
Mira Loma B	230	63	12.7	55	12.7	55.1	0.1
San Ber'dino	230	50	19.2	40.3	19.2	40.4	0.1
Serrano	525	40	13.9	25.2	13.9	25.3	0.1
Vincent A	230	63	15.8	49.2	15.8	49.3	0.1
Vista	230	40	13.6	39.7	13.6	39.8	0.1

TABLE 1
BYTHE II GENERATION SYSTEM IMPACT STUDIES
WITH DPV2 – NATURAL FLOW
BASE CASE

From Bus Name	To Bus Name	TkV	ID	[redacted]	(Pre-Project Loading %	Post-Project Loading %	Contingency Description
DEVERS	VALLEYSC	500	1	3000	105.7%	111.3%	Base Case
MIDPOINT	DEVERS	500	1	2700	83%	91.9%	Base Case

The percent loadings are on the Normal ratings.

TABLE 2
BYTHE II GENERATION SYSTEM IMPACT STUDIES
WITH DPV2 – NATURAL FLOW
SINGLE CONTINGENCIES – (N - 1)

From Bus Name	To Bus Name	TkV	ID	[redacted]	Pre-Project Loading %	Post-Project Loading %	Contingency Description
DEVERS	VALLEYSC	500	1	3000/3000	111.5%	118.20%	line DEVERS to VSTA 230 ck 2
MOENKOPI	ELDORDO	500	1	1900/2600	101.50%	106.50%	line MIDPINTS to DEVERS 500 ck 1
VSTA	SANBRDNO	230	2	3230/3710	113.41%	117.94%	line ETIWANDA to SANBRDNO 230 ck 1
MIDPOINT	DEVERS	500	1	2700/3650	118.6%	133.8%	line MIDPINTS to DEVERS 500 ck 2
MIDPOINT	DEVERS	500	2	2700/3650	138.40%	153.00%	line MIDPINTS to DEVERS 500 ck 1
DEVERS	DEVERS	500/ 230	1	1120/1230 MVA	108%	116%	line DEVERS to VALLEYSC 500 ck 1
DEVERS	DEVERS	500/ 230	2	1120/1230 MVA	108%	116%	line DEVERS to VALLEYSC 500 ck 1
ETIWANDA	VISTA	230	1	2000/2000	98%	103.9%	line DEVERS to VALLEYSC 500 ck 1
MIRLOMW	VISTA	230	1	2480/2850	107.2%	113.0%	line DEVERS to VALLEYSC 500 ck 1
DEVERS	VISTA	230	1	2480/2850	110.9%	116.7%	line DEVERS to VALLEYSC 500 ck 1
DEVERS	VISTA	230	2	2480/2850	110.9%	116.7%	line DEVERS to VALLEYSC 500 ck 1

TABLE 3
BYTHE II GENERATION SYSTEM IMPACT STUDIES
WITH DPV2 – NATURAL FLOW
DOUBLE CONTINGENCIES – (N - 2)

From Bus Name	To Bus Name	TkV	ID	[redacted]	Pre-Project Loading %	Post-Project Loading %	Contingency Description
DEVERS	VALLEYSC	500	1	3000/3000	122.2%	130.3%	Etiwanda – San Bdo. & San Bdo – Vista 230kV T/L's
MOENKOPI	ELDORDO	500	1	1900/2600	101.5%	106.5%	Devers – Midpoint 500kV T/L & Devers 500/230kV Tr. Bk. #1 or #2
VSTA	SANBRDNO	230	2	3230/3710	131.52%	137.1%	Devers – Vista & Etiwanda – San Bdo. 230kV T/L's

EXHIBIT B

CAISO LETTER TO SCE (ROBERT LUGO) DATED 05/17/06

California ISO
Your Link to Power

Dariush Shirmohammadi
Director of Regional Transmission – South
(916) 608-1113

May 17, 2006

Mr. Robert J. Lugo
Manager of Grid Interconnections & Contract Development
Southern California Edison
P. O. Box 800,
Rosemead, CA 91770

Subject: Blythe II Generation – System Impact Study

Dear Mr. Lugo:

The California ISO (CAISO) has reviewed the System Impact Study (SIS) for the Caithness – Blythe II Project ("the Project" or "BEPII"), dated March 15, 2006. The SIS was performed by Southern California Edison Company (SCE) based on the BEPII application to the California Independent System Operator ("CAISO") for interconnection. The maximum net output of the Project to the grid will be 520 MW; and the proposed commercial operation date (COD) is June 2008. The Project is proposed to connect to the 500 kV switch rack at a new SCE Substation ("Midpoint Substation") adjacent to SCE's Devers - Palo Verde 500 kV (DPV1) transmission line to transmit 520 MW to the ISO controlled grid. For more details about the project, see Attachment A to this letter.

The SIS was performed with the planned and approved second Devers - Palo Verde 500 kV (DPV2) transmission line in service - DPV2 has been approved by the CASIO board and its development is moving forward. A study without DPV2 was also performed for informational purposes only.

The CAISO concurs with SCE's SIS findings that are based on completion of upgrades required for higher queued projects. If these Projects and associated upgrades do not develop as anticipated, requirements for this Project may be re-evaluated. Please incorporate the comments and recommendations of Attachment A when performing the required Facility Study and any additional analyses that may be required. Approval for interconnection of the Project will be granted upon satisfactory completion of the Facility Study report and a final mitigation plan for resolving the identified transmission facility overloads due to this Project and all higher queued projects.

Please note that an approval of the interconnection of the project allows the project to connect to the CAISO Controlled Grid and to be eligible to deliver the project's output using available transmission. However, it does not establish the generation project's level of deliverability for purposes of determining its Net Qualifying Capacity under the CAISO Tariff and in accordance with CPUC-adopted Resource Adequacy Rules. Therefore, this letter makes no representation, and the Project cannot rely on any statements herein, regarding the ability, or amount, of the output of the project to be eligible to sell Resource Adequacy Capacity. We encourage you to follow the baseline deliverability studies ongoing at the CAISO. For more information on generation deliverability, please reference the web links provided in the attachment to this letter.

If you have questions about the CAISO review of this study, please contact Paul Steckley at (916) 608-5889 (PSteckley@caiso.com) or myself at (916) 608-1113 (DShirmohammadi@caiso.com).

Sincerely,

(Original signed by Dariush Shirmohammadi)

Dariush Shirmohammadi
Director of Regional Transmission - South

cc:	Robert Looper	(BEPII via e-mail, rlooper@spellc.com)
	Patricia L. Arons	(SCE via e-mail, Patricia.Arons@sce.com)
	John Tucker	(SCE via e-mail, John.Tucker@sce.com)
	David Franklin	(SCE via e-mail, David.Franklin @sce.com)
	Armando Perez	(CAISO via e-mail, APerez@caiso.com)
	Tom French	(CAISO via e-mail, TFrench@caiso.com)
	Gary L. Brown	(CAISO via e-mail, GLBrown@caiso.com)
	Judy Nickel	(CAISO via e-mail, JNickel@caiso.com)
	Paul Steckley	(CAISO via e-mail, PSteckley@caiso.com)
	Regional Transmission – South	(CAISO via e-mail)

Attachment A – System Impact Study Review

This attachment provides a summary of the project, along with CAISO comments.

Background of the Project:

Caithness Blythe II ("BEPII") applied to the California Independent System Operator ("CAISO") for interconnection pursuant to the ISO Tariff. The System Impact Study (SIS) for BEPII dated March 15, 2006, was performed by Southern California Edison Company (SCE) based on the Caithness Blythe II application submitted to the CAISO. BEPII proposes to construct the Blythe Energy Project II located in Blythe, California ("Project") and interconnect the Project to the 500 kV switch rack at a new SCE Substation ("Midpoint Substation")[1] adjacent to SCE's Devers - Palo Verde 500 kV (DPV1) transmission line to transmit 520 MW to the ISO controlled grid. The proposed commercial operation date (COD) is June 2008.

The study was performed by SCE with a 2009 heavy autumn load forecast and with maximum autumn EOR/WOR power flow and includes projects queued ahead of this Project. The autumn case was selected because historically during autumn seasonal conditions the Arizona – California system is most heavily stressed. Several regional generation patterns were modeled, including maximized generation offset in the LA Basin to fully stress Devers – Palo Verde 500 kV #1 transmission line (DPV1) and with and without the planned and approved second Devers - Palo Verde 500 kV (DPV2) transmission line. The following is a description of the powerflow case assumptions:

Case 1: 2009 Heavy Autumn Pre-Project case without the DPV2;

Case 2: 2009 Heavy Autumn Pre-Project case with DPV2;

Case 3: 2009 Heavy Autumn Post-Project case without DPV2 (Case 1 plus Project interconnection to Midpoint substation, natural flow case);

Case 4: 2009 Heavy Autumn Post-Project case without DPV2 and with increased series compensation on DPV1 to deliver an additional 520MW to the Devers 500kV substation (Case 3 with approximately 64% series compensation on the DPV1 500kV line);

Case 5: 2009 Heavy Autumn Post-Project case with DPV2 (Case 2 plus Project interconnection to Midpoint substation, natural flow case);

Case 6: 2009 Heavy Autumn Post-Project case with DPV2 and with increased series compensation on both DPV1 and DPV2 to deliver an additional 520 MW to the Devers 500kV substation (Case 5 with approximately 68% series compensation on the DPV1 500kV line and 70% series compensation on the DPV2 500kV line)

Since DPV2 has been approved by the CASIO board and is moving ahead, and with consideration of the Blythe II position in the CAISO Interconnection queue[2], the analyses with DPV2 was considered as the basis for determining the incremental impacts and interconnection requirements of Blythe II (Cases 2, 5 and 6). Analyses without DPV2 are considered only for informational purposes (Cases 1, 3 and 4). Figure 1 shows the local area system. Figure 2 has been assumed by CAISO as a

[1] The new Midpoint 500 kV Substation may be required by a higher queued project. The SIS performed assumes this substation will be available for BEPII to interconnect with. If the higher queued project does not develop as anticipated, or does not require the Midpoint Substation, then BEPII would be responsible for the Midpoint Substation or require new study under a separate application with an alternative interconnection method/point.

[2] While the proposed commercial operation date may precede the study period, the requirements and responsibility of the Project are determined based on the Project queue position and approved projects.

potential configuration for the proposed Midpoint 500 kV Substation since no configuration was provided in SIS report.

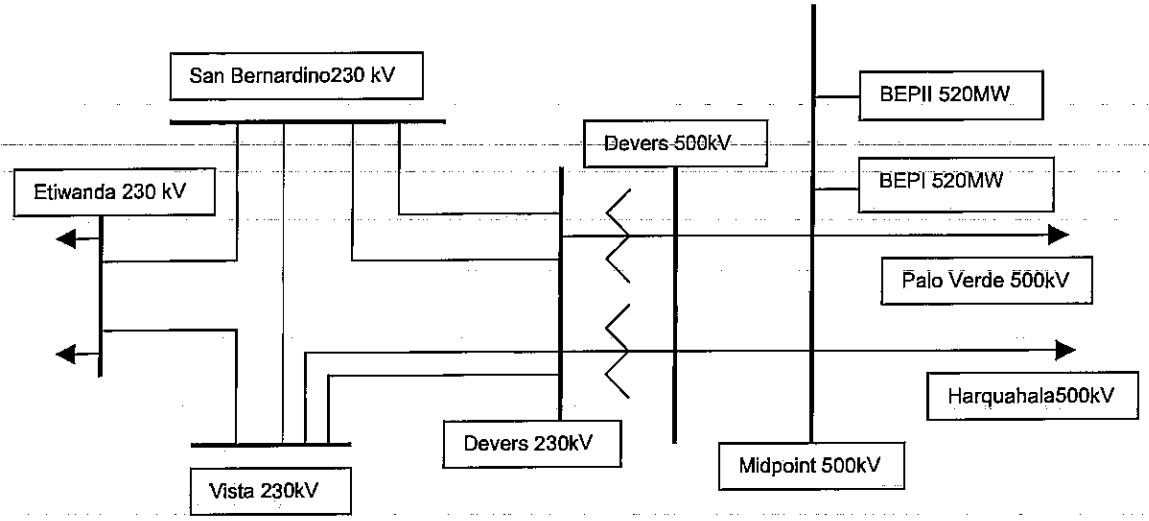

Figure 1 – Blythe II Radial Connection to Midpoint 500 kV Substation

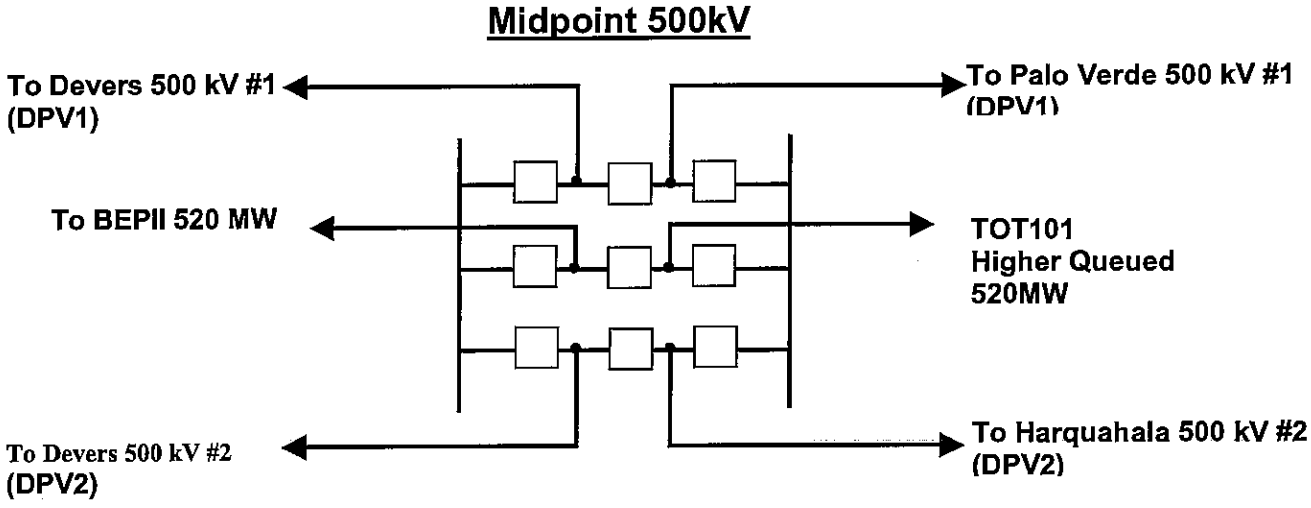

Assumed Configuration – For Discussion Purposes Only

Figure 2 - Proposed Midpoint 500 kV Substation

SIS Conclusions

The following summarizes the results and conclusions of the report. See the SIS Report for complete details.

Transient Stability – No problems identified

Post Transient – No problems identified with post transient/voltage

Short Circuit – Need for replacement of breakers at 13 substations identified (Pre-Project condition)

Steady State - summarized below

Upgrades Necessary to Support Higher Projects (Pre-Project System)

Table A-1 identifies conditions and resulting transmission upgrades from the SIS that are required to eliminate pre-project overloads caused by earlier projects placed ahead of BEPII in the application queue. These are summarized as follows:

- **Devers – Valley 500 kV line** - Replace the GIS Riser and wave trap on the Devers – Valley 500 kV line with a minimum 4000 A rating to mitigate overload following several N-1 or N-2 contingencies
- **San Bernardino – Vista 230 Line 2nd Devers – Valley 500 kV Line** - Construct a 2nd San Bernardino – Vista 230 line or advance the 2nd Devers – Valley 500 kV line to mitigate overload of the San Bernardino – Vista 230 kV # 2 line
- **Moenkopi – Eldorado 500 kV Series Capacitors** - SIS report indicates that 30 minute emergency rating of the Moenkopi – Eldorado 500 kV series capacitors is not exceeded, but may need to be replaced

Upgrades Necessary to Support the BEPII Project

Table A-1 identifies transmission upgrades from the SIS that are required to eliminate overloads caused by the BEPII Project. These upgrades apply to both the Natural Flow (Case 5) or Compensated Flow (Case 6) condition unless noted and are summarized as follows:

- **Devers – Palo Verde # 1 and #2 500 kV Lines** - Replace series capacitors on the Devers – Palo Verde # 1 and #2 500 kV Lines (new Devers - Mid Point sections) with a 4500 A rating to mitigate for overload of one line following loss of the companion line. An SPS to reduce Blythe II output is proposed as an alternative mitigation method. A base case (N-0) overload conditions was identified with the Compensated Flow configuration (Case 6) that would require higher rated facilities.
- **Devers 500/230 kV Transformation** - Install a new 3rd 500/230 kV transformer at Devers to mitigate overload of either the #1 or #2 transformer following loss of the companion transformer.
- **Devers – Vista #1 and #2 230 kV Lines** - Reconductor the Devers – Vista #1 and #2 230 kV lines with bundled 1590 ACSR conductor to mitigate overload following loss of Devers – Valley 500 kV line. This reconductor is currently required by a higher queued project, but with 2 – 1033 ACSR conductor. BEPII incremental impacts require an increase in the conductor size than planned for the higher queued project.
- **Etiwanda – Vista #1 230 kV Line** - Replace the GIS Riser and wave trap on the Etiwanda – Vista #1 230 kV line with a minimum 3000 A rating to mitigate overload following loss of Devers – Valley 500 kV line
- **Mira Loma – Vista #1 230 kV Line** - Replace the GIS Riser and wave trap on the Mira Loma – Vista #1 230 kV line with a minimum 3000 A rating to mitigate overload following loss of Devers – Valley 500 kV line. This upgrade is only required with the Compensated Flow (Case 6) condition.

CAISO Comments

The CAISO provides the following comments in regards the study and analyses provided. If conditions and assumptions considered in the study change, additional review and analyses may be required.

- The CAISO concurs with SCE's System Impact Study findings
- As noted, only DPV2 is considered as the basis for determining the incremental impacts and interconnection requirements of Blythe II
- All West of Devers pre-project upgrades required must be completed. In addition, other West-of-Devers upgrades not listed in the SIS, but previously identified through other study such as mitigation of potential overload the Etiwanda - San Bernardino 230 kV line and Valley – Serrano 500 kV line will be required. If the higher queued projects do not materialize as expected, the Project may need to assume responsibility for these upgrades.
- Series capacitor rating and design of Devers – Palo Verde # 2 500 kV Line (new Devers - Mid Point section) should be coordinated with this Project and higher queued projects to provide for a 4500 A rating. Incremental costs to upgrade these facilities should be allocated where appropriate.
- An SPS is not desirable to mitigate N-1 conditions for this Project and its location as it poses serious restrictions during scheduled outages. New or higher rated facilities would be preferred.
- Short circuit analyses identified concern at Lugo 500 kV, the 230 kV substations of Devers, Etiwanda and Vista, and the 115 kV substations at Devers and possibly Valley. CAISO concurs on SCE-proposed detailed evaluation of the short-circuit study determine the required circuit breaker replacements. These concerns have been identified as pre-Project.
- The proposed increased series compensation on DPV1 500 kV line to 64 % and DPV2 500 kV line to 70% is based on the overall compensation between Devers and Palo Verde. However, as modeled in the powerflow with the Midpoints Substation, the series compensation is about 85 to 90% for the Devers-Midpoint section. CAISO concurs with SCE's conclusion that further sub-synchronous resonance (SSR) study is required. SCE should confirm potential SSR impacts on local generation and operation under all lines in-service and maintenance conditions.
- CAISO prefers the Compensated Flow configuration (Case 6) to the Natural Flow configuration. If technically feasible, providing higher series compensation and ratings on the Devers – Midpoints 500 kV transmission under this configuration allows for higher transfers of the Blythe II project towards Devers and less potential of congestion by the Project over the SWPL/Miguel path.
- The SIS did not provide a single line diagram of the interconnection with proposed line and breaker configurations for the new Midpoint 500 kV Substation. The CAISO review assumed the configuration in Figure 2 based conclusions drawn from the SIS Report and our understanding of the Project. For this Project and in the future, no interconnection approval will be considered without a single line diagram indicating line and breaker configuration being submitted for review and approval. Additional analyses may be required upon review.
- The Facility Study should develop costs for the identified upgrades, if not already developed for other projects, and SCE determine a recommended plan of service for BEPII. The study should also indicate the costs for new facilities at the Midpoint 500 kV Substation for this Project.

Please note that an approval of the interconnection of the project allows the project to connect to the CAISO Controlled Grid and to be eligible to deliver the project's output using available transmission. However, it does not establish the generation project's level of deliverability for purposes of determining its Net Qualifying Capacity under the CAISO Tariff and in accordance with CPUC-adopted Resource Adequacy Rules. Therefore, this letter makes no representation, and the Project cannot rely on any statements herein, regarding the ability, or amount, of the output of the project to be eligible to sell Resource Adequacy Capacity.

We encourage you to follow the baseline deliverability studies ongoing at the CAISO. For more information on generation deliverability, please reference the following web links:

http://www.caiso.com/1796/17969a066d030.pdf
http://www.caiso.com/docs/2005/05/03/20050503170856641 0.pdf
http://www.caiso.com/docs/2005/05/03/20050503170431 5525.pdf

TABLE A-1
BLYTHE II GENERATION SYSTEM IMPACT STUDIES
WITH DPV2 and 2 DPV LINES LOOP INTO THE NEW MIDPOINT 500 KV SUBSTATION

	From Bus Name	To Bus Name	TkV	ID	Amp/MVA Rating Normal/Emerg	Pre-Project (Case 2) Loading %	Natural Flow (Case 5) Loading%	Compensation Increase (Case 8) Loading%	Contingency Description	Comments - Mitigation Plan and responsibility
									Upgrades Required by Higher Queued Projects	
1	DEVERS	VALLEYSC	500	1	3000/3000	**106%**	111%	115%	**Base Case (Normal Overload)**	**Mitigation Plan:** GIS Riser and wavetrap replacement with 4000 A rating.
						110%	117%	121%	line DEVERS to VSTA 230 ck 2	**Responsibility:** Higher quened Project
						110%	117%	121%	line VSTA to DEVERS 230 ck 1	
						108%	115%	119%	line SAN BERNARDINO - VISTA 230 ck 1	
						108%	115%	119%	line SANBRDNO to DEVERS 230 ck 1	
						108%	115%	119%	line DEVERS to SANBRDNO 230 ck 2	
						107%	114%	118%	line ETIWANDA to SANBRDNO 230 ck 1	
						109%	116%	121%	line MOENKOPI to ELDORDO 500 ck 1	
						103%	110%	114%	tran BUCK161 161 to BLY2CT2 16 ck 1	
						103%	110%	114%	tran BUCK161 161 to BLY2CT1 16 ck 1	
						103%	110%	114%	tran BUCK161 161 to BLY2ST1 16 ck 1	
						91%	100%	104%	line PALOVRDE to MIDPINTS 500 ck 1	
						122%	130%	134%	line outage 36 (N-2)	Note: 134 % for Case 6 in Report. 140% obtained with Case provided (4135 Amps)
2	VISTA	SANBRDNO	230	2	3230/3710	98%	103%	107%	line ETIWANDA to SANBRDNO 230 ck 1	**Mitigation Plan:** Construct 2nd San Bernardino - Vista 230 kV line or
						115%	119%	122%	line outage 2 (N-2)	advance 2nd Dever - Valley 500 kV line (if needed under SCE expansion plan).
						88%	92%	94%	line outage 5 (N-2)	**Responsibility:** Higher quened Project
3	MOENKOPI	ELDORDO	500	1	1900/2600	74%	78%	74%	line MIDPINTS to DEVERS 500 ck 1	30 minute emergency rating of series capcitors not exceeded
						74%	78%	74%	line outage 26 (N-2)	SCE report indicated the facility may need upgrade - TBD
									Upgrades Required by Blythe II	
4	MIDPOINT	DEVERS	500	1	2700/3650	83%	92%	106%	**Base Case (Normal Overload)**	**Mitigation Plan:** Series capacitors replacement with 4500 A rating
				1		88%	98%	106%	line MIDPINTS to DEVERS 500 ck 2	for both Midpoint - Devers 500 kV line or SPS to reduce Blythe II output
				2		**102%**	113%	122%	line MIDPINTS to DEVERS 500 ck 1	following loss of either Midpoint - Devers 500 kV line.
										Responsibility: Bythe II Generation Project.
5	DEVERS	VISTA	230	1 or 2	2480/2850	97%	102%	103%	line DEVERS to VALLEYSC 500 ck 1	**Mitigation Plan:** increasing conductor size to 2B-1590 ASCR while upgrade this line for the PVD2 Project or advance 2nd Devers - Valley 500 kV line (if needed under SCE transmission expansion plans.(Incremental upgrade) **Responsibility: Bythe II Generation Project**
6	DEVERS	DEVERS	500/230	1 or 2	1120/1230 MVA	98%	105%	108%	line DEVERS to VALLEYSC 500 ck 1	**Mitigation Plan:** Install 3rd Devers 500/230 kV transformer Bank. **Responsibility: Bythe II Generation Project.**
7	ETIWANDA	VISTA	230	1	2000/2000	98%	104%	105%	line DEVERS to VALLEYSC 500 ck 1	**Mitigation Plan:** Riser and wavetrap replacement with 3000 A rating. **Responsibity: Bythe II Generation Project**
8	MIRA LOMA	VISTA	230	1	2480/2850	93%	98%	100%	line DEVERS to VALLEYSC 500 ck 1	**Mitigation Plan:** Riser and wavetrap replacement with 3000 A rating. **Responsibity: Bythe II Generation Project**

Overload based on applicable rating - Normal for Base case, emergency for contingency. Red indicates overload above applicable rating. **Bold Red** indicates pre-project overload.

Line Outage 2	DEVERS 230.00 to VSTA 230.00 & from ETIWANDA 230.00 to SANBRDNO 230.00
Line Outage 10	DEVERS 230.00 to SANBRDNO 230.00 & from DEVERS 230.00 to VSTA 230.00
Line Outage 13	DEVERS 230.00 to VSTA 230.00 & from SANBRDNO 230.00 to DEVERS 230.00
Line Outage 26	MIDPINTS 500.00 to DEVERS 500.00 & from DEVERS 500.00 to DEVERS 230.00
Line Outage 36	ETIWANDA 230.00 to SANBRDNO 230.00 & from VSTA 230.00 to SANBRDNO 230.00

PO Box 639014 Folsom, California 95763-9014 Telephone: 916 351-4400

EXHIBIT C

OVERLOADS MATRIX AND PROPOSED SOLUTIONS

CAITHNESS - BLYTHE II
SYSTEM PLANNING STUDY - March 15, 2006
SUMMARY OF OVERLOADS and PROPOSED SOLUTIONS for "NATURAL FLOW - WITH DPV2"

Case	Element Overloaded	Base Case or Contingency	Triggered or Pre-Existing	RATING	Natural Flow (With DPV2)	Proposed Solution
1	Devers - Valley 500kV T/L	Base Case	Pre-Existing	3000A	3340A	Upgrade Line Terminations at Devers and Valley Substations to 4000A
		N-1 (12 Cases)	Pre-Existing	3000A	3545A (Max of 12 N-1 loadings)	None Required - Base Case upgrades eliminate N - 1 overloads
		N-2 (24 Cases)	Pre-Existing	3000A	3910A (Max of 24 N-2 loadings)	None Required - Base Case upgrades eliminate N - 2 overloads
2	Midpoint - Devers No.2 500kV T/L	N-1 (1 Case)	Pre-Existing	2700A / 3650A	3740A	Upgrade 2700A/3650A 500kV Line Series Capacitors in California to 4000A/5400A This upgrade is required on both DPV1 and DPV2 500kV T/L's SEE NOTE 1 BELOW
3	Eldorado - Moenkopi 500kV T/L	N-1	Pre-Existing	1900A / 2460A	2025A	No Upgrade - Based on Capacitors Short Term Emergency Rating (STER = 2460A for 30 minutes) Or: Upgrade Capacitors Or: Install SPS - 1 to trip generation under the loss of the Devers - Midpoint No.1 or No.2 500kV T/L's SEE NOTE 2 BELOW
4	San Bernardino - Vista 230kV T/L	N-1 (1 Case)	Triggered by Project	3230A / 3710A / 4360A	3810A	Install either a new Devers - Valley No.2 500kV T/L or a new San Bernardino - Vista No.2 230kV T/L In addition - Install SPS - 2 to trip-off Generation under the loss of the Etiwanda - San Bernardino 230kV T/L SEE NOTE 3 BELOW
		N-2 (2 Cases)	Triggered by Project	3230A / 3710A / 4360A	4428A (Max of 2 N-2 loadings)	None Required - SPS - 2 for N - 1 eliminates N - 2 overload
5 6	Devers - Vista No.1 230kV T/L Devers - Vista No.2 230kV T/L	N-1 (1 Case)	Triggered by Project	2480A / 2850A	2900A	None Required - The installation of the new Devers - Valley No.2 500kV T/L for Case 4 above eliminates these overloads
7 8	Devers 500/230kV No.1AA Tr. Bk. Devers 500/230kV No.1AA Tr. Bk.	N-1 (1 Case)	Pre-Existing	1120MVA / 1230MVA	1300MVA	None Required - There is an existing SPS at Devers which opens all bank breakers under overload consditions
9	Mira Loma - Vista No.2 230kV T/L (Will become Mira Loma - Vista 220kV T/L after No.1 Line is looped into Jurupa Substation	N-1	Pre-Existing	2300A / 2650A	2802A	Replace 2-1033KCMIL ACSR Line Drops at Vista Substation with 2-1590KCMIL ACSR
10	Etiwanda - Vista 230kV T/L	N-1 (1 Case)	Triggered by Project	2000A / 2000A	2080A	Replace 2000A Wave Trap at Etiwanda Gen. Sta. with 3000A Rated

NOTE 1 Although the overload occurs only on the DPV2 500kV T/L, both Capacitor Banks should be upgraded to keep equal ratings on the two lines which parallel each other.

NOTE 2 At this time it is assumed that SPS - 1 would be the best option

NOTE 3 The Facilities Study addresses the new Devers - Valley No.2 500kV T/L and not the San Bdo. - Vista No.2 230kV T/L If the Devers - Valley No.2 500kV T/L was not in service the upgrade would need to be re-evaluated.

SPS's REQUIRED

SPS - 1: Trip Blythe II generation under the N - 1 outage of either Devers - Midpoint No.1 or No.2 500kV T/L
SPS - 2: Trip Blythe II generation under the N - 1 outage of Etiwanda - San Bernardino 230kV T/L

E. A. ROMERO
01/19/07

EXHIBIT D

MIDPOINT SUBSTATION

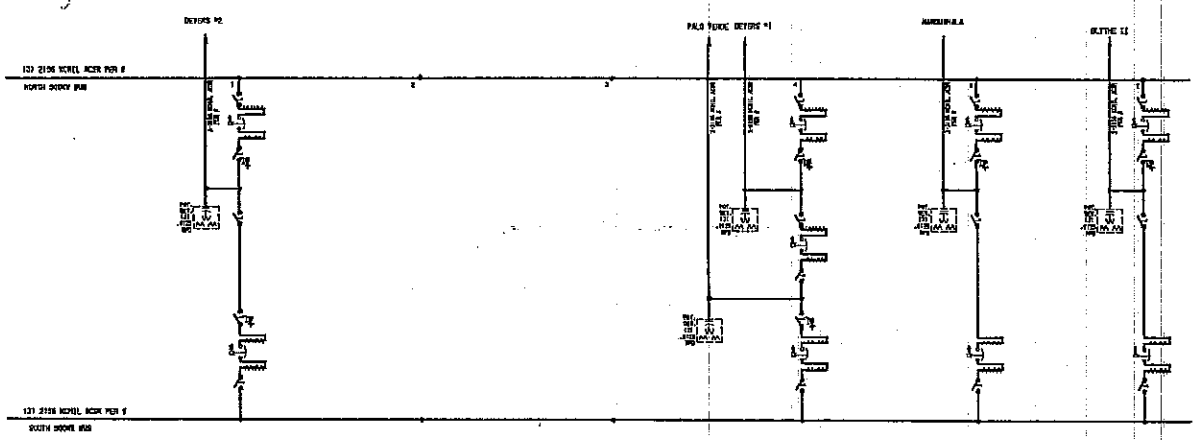

ORSA Consulting Engineers, Inc. Fullerton, California

REFERENCE DRAWINGS	REFERENCE DRAWINGS	NO.	REVISIONS	DATE	P.E.	DAE	SUPV	APPROVED	DWN	CK'D	MADE	T.B.	NO.	REVISIONS	DATE	P.E.	DAE	SUPV	APPROVED	DWN	CK'D	MADE	T.B.
													FOR PSEE							H2O	ORSA		

LOCATION: MIDPOINT SUBSTATION

ONE LINE FOR FACILITIES STUDY.

SOUTHERN CALIFORNIA EDISON An EDISON INTERNATIONAL Company

SHEET NO. E

SCALE: NONE

1 OF 1 SHTS.

DWG. LIST No. ——— SH. ——— * REFER ON AUTOCAD SYSTEM ONLY *

BLYTHE II PROJECT

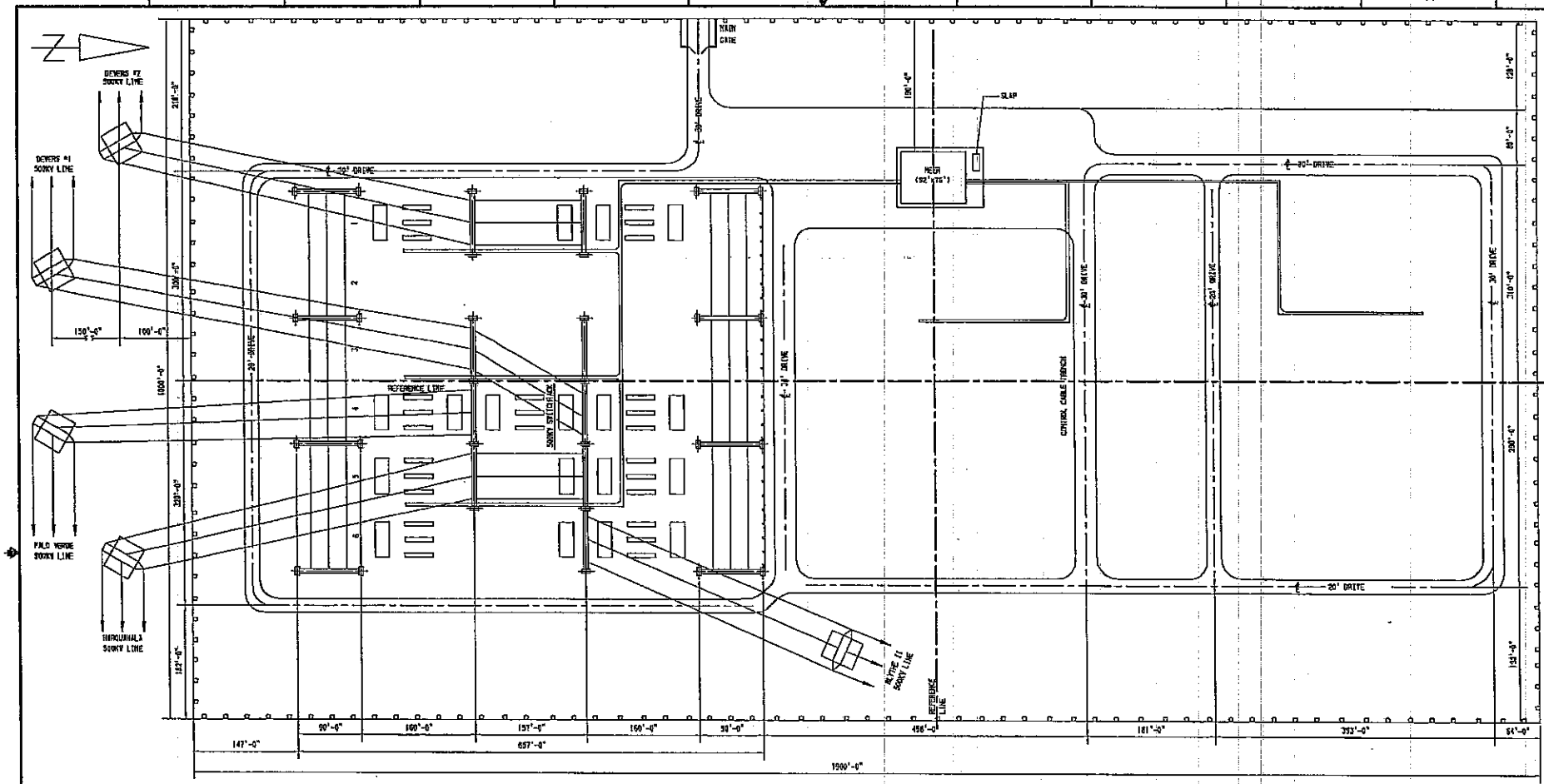

ORNA Consulting Engineers, Inc.
Fullerton, California

REFERENCE DRAWINGS	REFERENCE DRAWINGS	NO.	REVISIONS	DATE	P.E.	DRE	DRFM	APPROVED	KNOW	CK'D	MADE	I.D.	NO.	REVISIONS	DATE	P.E.	DRE	DRFM	APPROVED	KNOW	CK'D	MADE	I.D.
													0	FOR STUDY						MZO		ORSA	

LOCATION: REDPOINT SUBSTATION

PLOT PLAN
FOR FACILITIES STUDY

SOUTHERN CALIFORNIA EDISON
An EDISON INTERNATIONAL Company

SHEET NO.

SCALE: 1"=40'-0"

OF SHTS.

BLYTHE II PROJECT

EXHIBIT E

TELECOMMUNICATION CHANNELS FOR CASE B

Line Arrangements for
Blythe - Midpoint 500kV Gen. Tie Line
Devers-Palo Verde and Dever-Harquahala 500kV Loop into Midpoint Substation

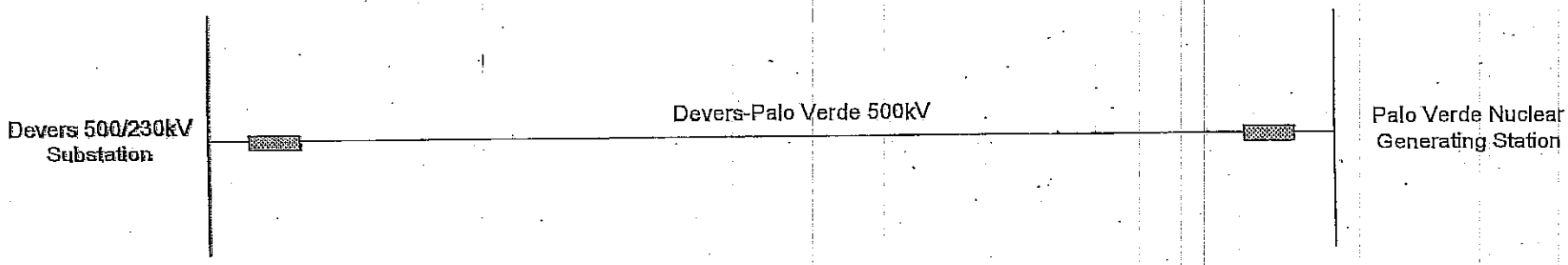

BEFORE

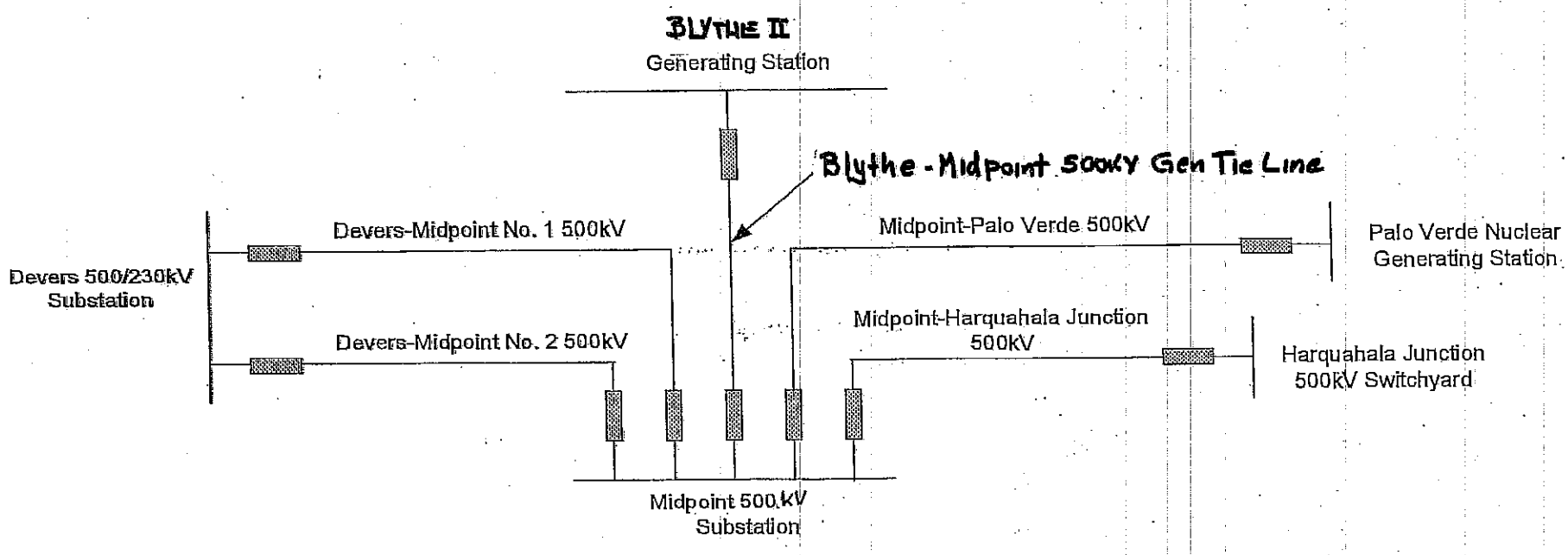

AFTER

Telecommunications for Blythe II Interconnection and Devers-Palo Verde 500kV Loop into Midpoint Substation

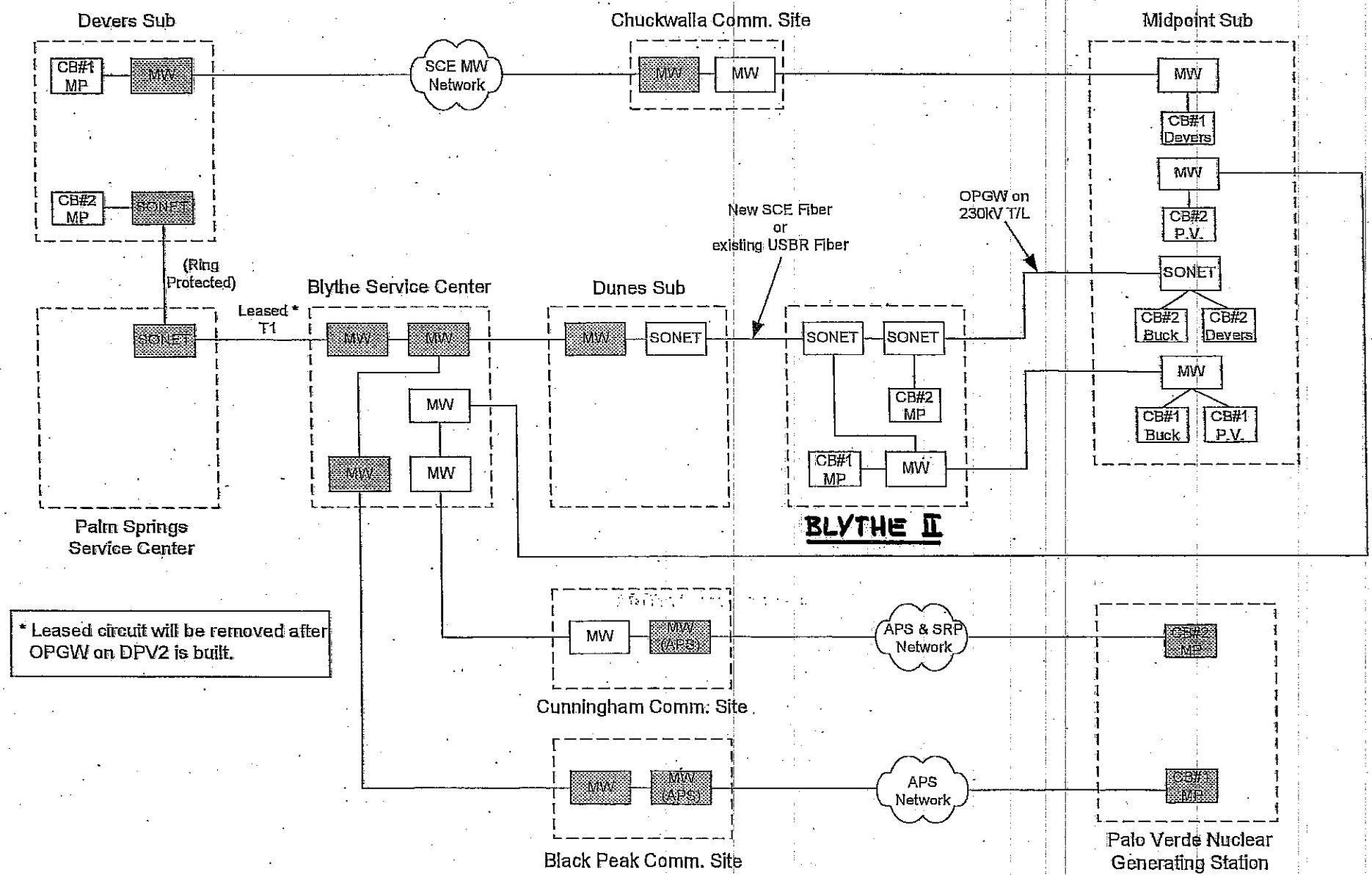

* Leased circuit will be removed after OPGW on DPV2 is built.

Existing equipment shown in gray

Telecommunications for Devers-Harquahala (DPV2) 500kV Loop into Midpoint Substation

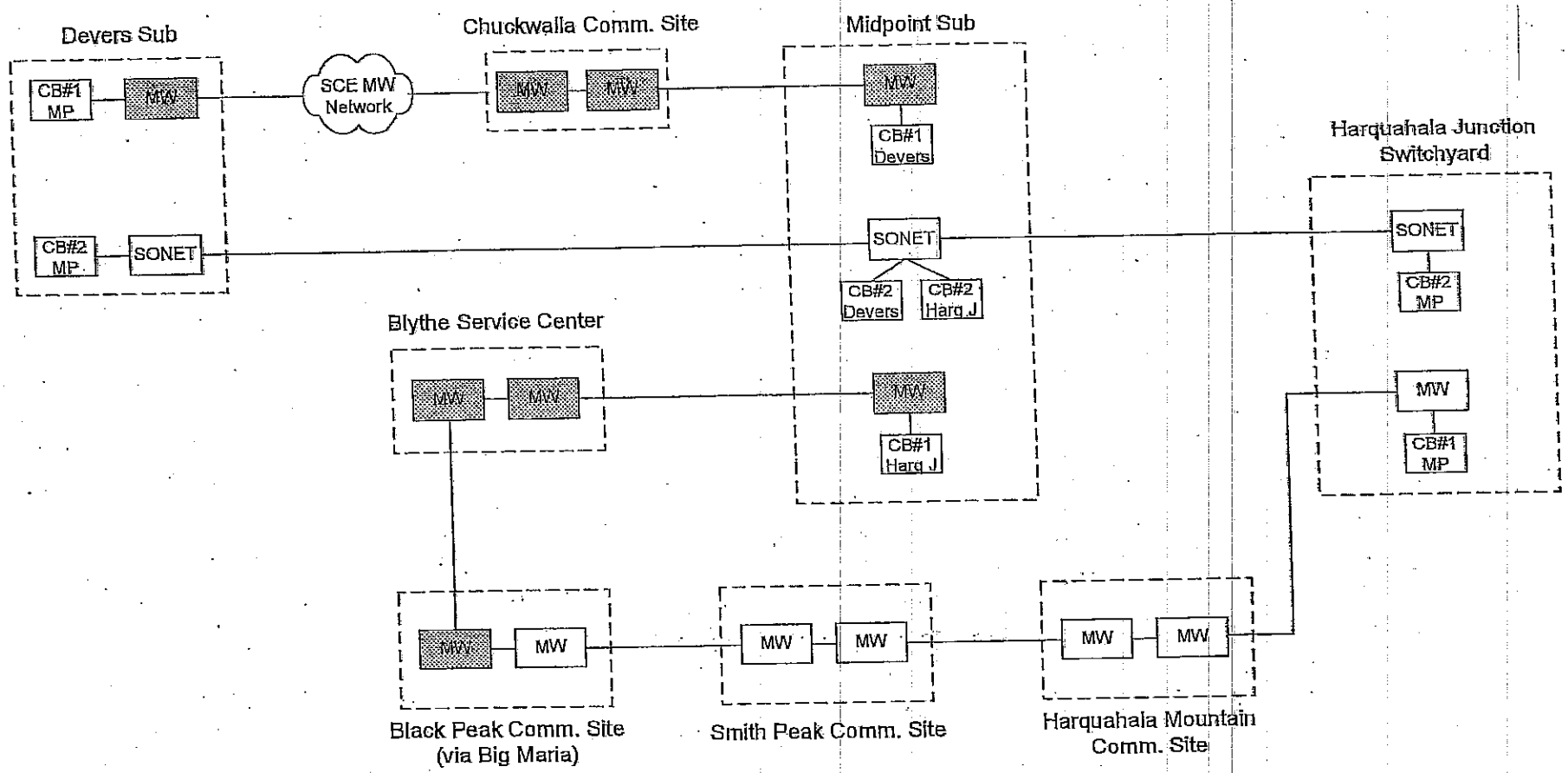

Existing equipment shown in gray

EXHIBIT F

FACILITIES STUDY SCOPE – ADDITIONAL DETAIL

CAITHNESS BLYTHE II INTERCONNECTION PROJECT – NATURAL FLOW CASE

FACILITIES STUDY SCOPE – DETAILS

CASE A – ELEMENTS REQUIRED FOR THE PROJECT

A. Transmission:

Blythe – Midpoint 500kV Generation Tie Line

Install one Dead – End Lattice Structure inside Midpoint Substation and two spans of conductors and ground wire. One span to the first structure outside the substation perimeter fence and one span to the 500kV Switchyard Dead – End Structure.

This work also requires the installation of 1,000 Circuit Ft. of 2-2156KCMIL ACSR Conductors (6,000 Ft.) and Optical Ground Wire (2,000 Ft.) and nine Insulators & Hardware Dead – End Assemblies

B. Substations:

1. **Midpoint Substation**

   Equip the existing 500kV Position 6 as a Double Breaker Line Position on a Breaker-and-a-Half Configuration to terminate the new Blythe – Midpoint 500kV Generation Tie Line. This work requires the installation of the following equipment:

   - One Dead-End Structure (108 Ft High x 90 Ft Wide)
   - Two 500kV – 3000A – 40kA Circuit Breakers
   - Four 500kV Horizontal-Mounted Group-Operated Disconnect Switches – One of them equipped with Grounding Attachments.
   - Fifteen 500kV Bus Supports
   - Three 500kV CCVT Potential Devices
   - Three 500kV Surge Arresters
   - Three 500kV 4000A Wave Traps and Line Tuners
   - Three Line Tie-Downs with 2-2156KCMIL ACSR Conductors
   - Three 660 Ft. sections of 2-2156KCMIL ACSR Bus Conductors (Approximately 4000Ft. of Conductor)

   Also install the following Line Protection Relays in the existing Mechanical – Electrical Equipment Room (MEER):

   - Two GE C60 Breaker Management Relays
   - One GE D60 Hybrid POTT [Digital Channel]
   - One SEL-311L Line Current Differential Relay [Digital Channel]
   - One GE L90 Line Current Differential [Digital Channel]
   - Two RFL 9745 Tele-protection channel DTT's

2. **Etiwanda Gen. Sta.**

   Replace the existing 2000A 230kV Wave Trap on the Vista 230kV line Position with new 3000A Rated unit to restore the N – 1 Line Rating to 2850A.

3. **Etiwanda Gen. Sta.**

   Install two G.E. N60 Relays and one SEL-2407 Satellite Synchronized Clock to support the required SPS – 2.

4. **San Bernardino Gen. Sta.**

   Install two G.E. N60 Relays and one SEL-2407 Satellite Synchronized Clock to support the required SPS – 2.

C. Telecommunications:

1. Install two new fiber optic channels between the Blythe II Generating Facility and the earlier TOT 101 Telecommunications Room to provide one of the two channels required between Midpoint Substation and the Blythe II Generating Facility to support the Blythe – Midpoint 500kV Generation Tie Line Protection Relays. The remaining channel required for line protection will be provided by BEPII by installing OPGW on the new 500kV Generation Tie Line.
2. The installation described above also provides the channels between the Blythe II Generating Facility and Devers Substation which are required for the new RTU.
3. Also install required interface terminal equipment at Etiwanda and San Bernardino Generating Stations to support the SPS – 2 related relays.

D. Power System Control

1. Install one Remote Terminal Unit (RTU) at the Blythe II Generating Facility to monitor the typical Bulk Power elements such as MW, MVAR, and Phase Amps at each line and also kV at lines and buses and all generator circuit breaker status.

   The RTU will transmit information to the SCE Grid Control Center via the existing Devers remote Data Acquisition Controller node of the Mira Loma Regional Control Center System.
2. Install additional points to the existing RTU at Midpoint Substation to monitor MW, MVAR, and Phase Amps and monitor / control circuit breakers at the new 500kV Generation Tie Line Position 6.

CAITHNESS BLYTHE II INTERCONNECTION PROJECT – NATURAL FLOW CASE

FACILITIES STUDY SCOPE – DETAILS

CASE B – ELEMENTS REQUIRED FOR EARLIER INTERCONNECTION

A. Transmission:

1. **Devers – Palo Verde 500kV T/L**
   Loop the existing line in and out of Midpoint Substation and form the two new Devers – Midpoint No.1 and Midpoint – Palo Verde 500kV T/L's.

   This work requires the installation of two interset ELD Type 500kV Towers (Single Circuit Dead – End Lattice Structure) to break tension in each direction and turn the line to the north.

   It also requires the installation of one DHA Type 500kV Tower (Double Circuit Dead – End Lattice Structure) to provide the vertical configuration required to rotate the phase conductors to match the line and station phasing arrangements.

   The installation also requires approximately 2000 Circuit Ft. of 2-2156KCMiL ACSR Conductor (12,000 Ft.) and 2000 Ft. of ½" EHS Steel Overhead Ground Wire and thirty Dead – End insulator / hardware assemblies with polymer insulators.

2. **Devers – Harquahala 500kV T/L**
   Loop the line in and out of Midpoint Substation and form the two new Devers – Midpoint No.2 and Harquahala – Midpoint 500kV T/L's.

   Same installation as Item 2 above.

3. **Devers – Valley No.1 500kV T/L (Existing Line)**
   Relocate the line termination at Devers Substation from the GIS Building to a new Line Position to be installed at the Outdoor 500kV Switchyard.

   This work requires the installation of three 145 Ft. TSP's with a Common Rectangular Tube Crossarm.

   It also requires the installation of approximately 1000 Circuit Ft. of new 2-2156KCMiL ACSR Conductor (6,000 Ft.) and 1000 Ft. of new ½" EHS Steel Overhead Ground Wire and thirty Dead – End insulator / hardware assemblies with polymer insulators.

   This line relocation is required because the existing GIS equipment can't be upgraded to 4000A Rating.

4. **Devers – Valley No.2 500kV T/L (New Proposed Line)**
   Install approximately 42 Miles of new 500kV Transmission Line using single circuit lattice structures, 2-2156KCMIL ACSR Conductors per phase, one ½-In. High Strength Steel Overhead Ground Wire and one single 48-fiber Optical Ground Wire.

   This work requires the installation of approximately 145 structures as follows:

116	Suspension Lattice Towers
11	Suspension "Tetra" Towers
28	Dead – End Lattice Towers
1	Dead – End "Tetra" Towers

   It also requires the installation of the following additional equipment:

381	Insulators & Hardware Suspension Assemblies
174	Insulators & Hardware Dead – End Assemblies

B. Substations:

1. Midpoint Substation

Engineer and construct a 500kV Interconnection Facility to loop the Devers – Palo Verde and Devers – Harquahala 500kV Transmission Lines with provisions to install an additional 500kV Line Position to terminate the forthcoming Blythe – Midpoit 500kV Generation Tie Line.

NOTE: The facility will be laid out to allow for future expansion to a 2240MVA 500/230kV Substation with an ultimate configuration of five 500kV and four 230kV Lines and two 500/230kV Transformer Banks.

This work requires the installation of the following equipment:

- Two 500KV Operating Buses covering six positions
- One 500kV Position to terminate the Devers No.2 500kV T/L
- One 500kV Position to connect the No.1AA Tr. Bk.
- One 500kV Position to terminate both the Devers No.1 & Palo Verde 500kV T/L's
- One 500kV Position to terminate the Harquahala 500kV T/L
- Two 500kV Positions left vacant for future use

500kV Switchyard:

Operating Buses:

Install 500kV North and South Buses as follows:

- Install eight Bus Dead End Structures (60 Ft High x 90 Ft Wide)
- Install thirty six Bus Dead-End Insulator Assemblies
- Six 500kV Potential Devices
- Install six 180 Ft. sections of 3-2156KCMIL ACSR Bus Conductors (Approximately 9700Ft. of Conductor)

Position 1:

Install one Double Breaker Line Position on a Breaker-and-a-Half Configuration to terminate the Devers No.2 500kV T/L as follows:

- One Dead-End Structure (108 Ft High x 90 Ft Wide)
- Two 500kV – 3000A – 40kA Circuit Breakers
- Four 500kV Horizontal-Mounted Group-Operated Disconnect Switches – One of them equipped with Grounding Attachments.
- Fifteen 500kV Bus Supports
- Three 500kV CCVT Potential Devices
- Three 500kV Surge Arresters
- Three 500kV 4000A Wave Traps and Line Tuners
- Three Line Tie-Downs with 2-2156KCMIL ACSR Conductors
- Three 660 Ft. sections of 2-2156KCMIL ACSR Bus Conductors (Approximately 4000Ft. of Conductor)

Position 2:

Position left vacant for future use.

Position 3:

Position left vacant for future use.

Position 4:

Install one Three-Breaker Line Position on a Breaker-and-a-Half Configuration to terminate both the Devers No.1 and the Palo Verde 500kV T/L's as follows:

- Two Dead-End Structures (108 Ft High x 90 Ft Wide)
- Three 500kV – 3000A – 40kA Circuit Breakers
- Six 500kV Horizontal-Mounted Group-Operated Disconnect Switches – Two of them equipped with Grounding Attachments.
- Six 500kV Bus Supports
- Six 500kV CCVT Potential Devices
- Six 500kV Surge Arresters
- Six 500kV 4000A Wave Traps and Line Tuners
- Six Line Tie-Downs with 2-2156KCMIL ACSR Conductors
- Three 660 Ft. sections of 2-2156KCMIL ACSR Bus Conductors (Approximately 4000Ft. of Conductor)

Position 5:
Install one Double Breaker Line Position on a Breaker-and-a-Half Configuration to terminate the Harquahala 500kV T/L as follows:

- One Dead-End Structure (108 Ft High x 90 Ft Wide)
- Two 500kV – 3000A – 40kA Circuit Breakers
- Four 500kV Horizontal-Mounted Group-Operated Disconnect Switches – One of them equipped with Grounding Attachments.
- Fifteen 500kV Bus Supports
- Three 500kV CCVT Potential Devices
- Three 500kV Surge Arresters
- Three 500kV 4000A Wave Traps and Line Tuners
- Three Line Tie-Downs with 2-2156KCMIL ACSR Conductors
- Three 660 Ft. sections of 2-2156KCMIL ACSR Bus Conductors (Approximately 4000Ft. of Conductor)

Position 6:
Position left vacant for future use.

Mechanical - Electrical Equipment Room (MEER):
Install a new 30 Ft. x 20 Ft. MEER Building to house the following equipment:

- Batteries and Battery Charger
- Light & Power Selector Switch
- Light & Power Panel
- A.C. Distribution Panel
- D.C. Distribution Panel

Protection Relays
500 kV Buses:

- Twelve GE SBD11B Bus Differential Relays

500kV T/L's:
Install the following relays at each one of the four T/L's:

- Two GE C60 Breaker Management Relays
- One SEL-421/RFL 9780 Power Line Carrier POTT.
- One GE L90 Line Current Differential (Digital F. O. Channel)
- One GE D60 Directional Comparison Pilot Relaying (Digital F.O./MW Channel)
- One RFL 9745 Tele-protection Channel DTT (Digital F.O. Channel)
- One RFL 9780 FSK Power Line Carrier DTT.

Also install one Digital Fault Recorder

Other Station Elements to be installed:

- 5800 Linear Feet of 8 Ft. perimeter fence with double barbed wire to cover a 1900 Ft. by 1000 Ft. area.
- One 20 Ft. Double Door driveway gates
- Grounding Grid to cover a 1906 Ft. by 1006 Ft area (3 Ft. outside the perimeter fence)
- Approximately 8000 Linear Feet of 25 Ft. paved driveway
- Approximately 3000 Linear Feet of control cable trench

Site Preparation:

Earthwork:

- Strip 24 Inch deep over entire site. Remove vegetation, and screen loose soil Approximately 150,000 Cubic Yards
- Estimated 30% waste. Haul to green waste site = 45,000 Cubic Yards
- Stockpile remaining 105,000 Cubic Yards
- Over-excavate 1 ft. deep. = 75,000 Cubic Yards, and stockpile
- Replace and re-compact to 90% relative compaction.
- Shrinkage allowance, 25% or 15,000 Cubic Yards, take from stockpile.
- Construct Berm: 4Ft. High by 6Ft. Wide at Base – Approximately = 16 Square Ft. by 6000 Linear Ft. = 4000 Cubic Yards
- Remaining 90,000 Cubic Yards use as fill, about 16 inches of fill over the site.
- Import remaining 70,000 Cubic Yards to bring back to the existing grade.

Utilities:

- Deep water well. 1000 ft.
- Septic tank w/leaching field

Interior driveways:

8000 ft. of avg. 25 ft. wide

- Over-excavate 2 ft. and re-compact to 95% = 15,000 Cubic Yards
- Import Class II base at 6 inch thick = 4,000 Cubic Yards
- Asphalt concrete paving at 4 inch thick = 2,500 Cubic Yards

Concrete drainage structures:

- 2000Ft. concrete swale 4 ft. wide, 6 inches thick, with welded wire fabric at center.
- Concrete = 150 Cubic Yards
- Welded Wire Fabric = 7000 Square Ft.

Rock surfacing:

- 2,000,000 Square Ft. less roads and structures at 220000 Square Ft.
- Approximately 1,780,000 Square Ft. by 4 In. = 22,000 Cubic Yards.

2. **Devers Substation**

Upgrade the Valley No.1 500kV Line Position to 4000A Rating to support the required line upgrade to 3950A Rating.

This upgrade requires the following work:

- Replace three 2-2156KCMIL ACSR Line Drops with new 4-In. Dia. IPS E.H. Tubular Aluminum Conductor.
- Replace four Disconnect Switches with new 4000A Rated.
- Replace two Circuit Breakers with new 4000A Rated.
- Replace all 2-2156KCMIL ACSR conductors with new 3-2000KCMIL AAC.

Also:
Install one Double Breaker Line Position on a Breaker-and-a-Half Configuration to terminate the new Valley No.2 500kV T/L as follows:

- One Dead-End Structure (108 Ft High x 90 Ft Wide)
- Two 500kV – 3000A – 40kA Circuit Breakers
- Four 500kV Horizontal-Mounted Group-Operated Disconnect Switches – One of them equipped with Grounding Attachments.
- Fifteen 500kV Bus Supports
- Three 500kV CCVT Potential Devices
- Three 500kV Surge Arresters
- Three 500kV 4000A Wave Traps and Line Tuners
- Three Line Tie-Downs with 2-2156KCMIL ACSR Conductors
- Three 660 Ft. sections of 2-2156KCMIL ACSR Bus Conductors (Approximately 4000Ft. of Conductor)

3. **Valley Substation**
Install a new 4000A Rated Line Position in the existing Outdoor 500kV Switchyard to terminate the relocated Devers 500kV T/L.

This work requires the installation of the following equipment:

- One 108Ft. high x 90Ft. wide line dead end structure and foundations
- Three 108 Ft. tie-downs with 4-In. Dia. IPS E.H. Tubular Aluminum Conductor.
- Three CCVT's with support pedestals and foundations
- Two 500kV 4000A 50kA circuit breakers and foundations
- Four 500kV group operated - horizontally mounted disconnect switches with support structures and foundations - One of them with grounding attachments
- Twenty-four bus support insulators with support pedestals and foundations
- Three 680Ft segments of 3-2000KCMIL AAC conductors (Approximately 6,000Ft. of conductors)
- Three 500kV Lightning Arresters with support pedestals and foundations

Also:
Install one Double Breaker Line Position on a Breaker-and-a-Half Configuration to terminate the new Devers No.2 500kV T/L as follows:

- One Dead-End Structure (108 Ft High x 90 Ft Wide)
- Two 500kV – 3000A – 40kA Circuit Breakers
- Four 500kV Horizontal-Mounted Group-Operated Disconnect Switches – One of them equipped with Grounding Attachments.
- Fifteen 500kV Bus Supports
- Three 500kV CCVT Potential Devices
- Three 500kV Surge Arresters
- Three 500kV 4000A Wave Traps and Line Tuners
- Three Line Tie-Downs with 2-2156KCMIL ACSR Conductors
- Three 660 Ft. sections of 2-2156KCMIL ACSR Bus Conductors (Approximately 4000Ft. of Conductor)

4. **Vista Substation**
Replace the 2-1033KCMIL ACSR Line Drops on the Mira Loma 230kV line Position with new 2-1590KCMIL ACSR to restore the N – 1 Line Rating to 3000A.

5. **Devers Substation**
   Install two G.E. N60 Relays and one SEL-2407 Satellite Synchronized Clock to support the required SPS – 1.

6. **Midpoint Substation**
   Install two G.E. N60 Relays and one SEL-2407 Satellite Synchronized Clock to support the required SPS – 1.

C. **500kV Series Capacitor Banks:**

1. **California Series Capacitors – DPV1**
2. **California Series Capacitors – DPV2**

   Upgrade the existing California 500kV Series Capacitor Banks on both the DPV1 and DPV2 500kV T/L's presently rated 2700A Normal and 3650A Emergency to new ratings of 4000A Normal and 5400A Emergency

D. **West of Devers Upgrades:**

1. **Devers – Vista No.1 230kV T/L**
2. **Devers – Vista No.1 230kV T/L**
3. **Devers – San Bernardino No.1 230kV T/L**
4. **Devers – San Bernardino No.1 230kV T/L**

Upgrade approximately 176 Circuit Mile of existing four lines by replacing existing conductors with new 2-1033KCMIL ACSR, installing all new insulators and hardware assemblies and replace or modify structures as required.

Also upgrade terminal equipment at Devers, San Bernardino and Vista as required to support the new line ratings.

These upgrades also require the following replacements and upgrades of 230kV Circuit Breakers throughout the SCE System:

- Devers Sub. — Replace eight and upgrade three 230kV CB's
- Etiwanda Gen. Sta. — Upgrade three 230kV CB's
- Lewis Sub. — Replace two 230kV CB's
- Vincent Sub. — Upgrade one 230kV CB

E. **Telecommunications:**

1. Install all required communication channels and interface terminal equipment to support the Line Protection Relays required after looping the DPV1 and DPV2 500kV T/L's into Midpoint Substation.
2. Install additional interface terminal equipment at Devers and Mipoint Substations to support the SPS – 2.

The work described above requires the installation of the following I.T. channels:

- Four Digital Fiber Optic Channels between Devers and Midpoint
- Two Digital Microwave Channels between Devers and Midpoint
- Two Digital Fiber Optic channels between Midpoint and Palo Verde
- One Digital Microwave channels between Midpoint and Palo Verde
- Two Digital Fiber Optic channels between Midpoint and Harquahala
- One Digital Microwave channels between Midpoint and Harquahala

The Devers – Midpoint No.1 500kV T/L Protection requires construction of a new Microwave Path from Midpoint Sub. to the existing Chuckwalla Communications Site.

The diverse route for the Devers – Midpoint No.1 500kV T/L Protection requires a leased T1 circuit from the phone company between Palm Springs and Blythe Service Centers and a new fiber cable from SCE Dunes Sub. to the TOT 1 Telecommunications Room.

The Midpoint – Palo Verde 500kV T/L Protection requires the construction of new Microwave Paths from Midpoint Sub. to the Blythe Service Center and from the Blythe Service Center to the Arizona Power Service Cunningham Communications Site.

The requirements for the Devers – Harquahala 500kV Line Protection, assumes that all I.T. facilities will be constructed as part of DPV2 project and only considers the incremental channel equipment required to provide protective relaying support.

Install Telecommunications equipment at each location as follows:

Devers Substation:

- Two channel banks and associated C37.94 channel modules.
- One Ethernet drop for SEL-2030 remote access.

Chuckwalla Comm. Site:

- Install digital microwave terminal and associated antenna to Midpoint Substation.

Midpoint Substation:

- Install antenna tower, data, alarm, and channel equipment.
- Install digital microwave terminal and associated antenna to Chuckwalla Comm. Site.
- Install digital microwave terminal and associated antenna to Blythe Service Center.
- Install six channel banks and associated C37.94 channel modules.
- Install one Ethernet drop for SEL-2030 remote access.

Blythe Service Center:

- Install digital microwave terminal and associated antenna to Midpoint Substation.
- Install digital microwave terminal and associated antenna to Cunningham Comm. Site.

Cunningham Comm. Site:

- Install digital microwave terminal and associated antenna to Blythe Service Center.
- Install channel and alarm equipment.

Dunes Substation:

- Install SONET terminal and digital cross-connect equipment.

Harquahala 500kV Switchyard:

- Install two channel banks and associated C37.94 channel modules.

Palm Springs Service Center:

- Install T1 cross-connects.

E. A. Romero
01/29/07

EXHIBIT G

COST SUMMARY

CAITHNESS BLYTHE II INTERCONNECTION PROJECT - NATURAL FLOW CASE

Cost Estimate Summary (2009 Dollars)

Scope: Iterconnect 520MW of Blythe II Generation to Midpoint Sub. 500kV Bus via a BEPII owned Blythe - Midpoint 500kV Generation Tie Line.

CASE A - ELEMENTS REQUIRED EXCLUSIVELY FOR THE PROJECT

ELEMENT	INTERCONNECTION FACILITIES	RELIABILITY UPGRADES	Income Tax Component of Contribution *	ONE TIME PAYMENT
Transmission				
Blythe - Midpoint 500kV Gen. Tie Line: Segment inside Midpoint Sub.	$ 750,000	$ -	$ 263,000	$ 1,013,000
Substations				
Midpoint Substation: New 500kV Line Position for 500kV Gen. Tie Line	$ 1,279,000	$ 6,227,000	$ 448,000	$ 7,954,000
Etiwanda Gen. Station: Replace Wave Trap at Vista 230kV Line Position		$ 92,000		$ 92,000
Etiwanda Gen. Station: SPS-2 Relays		$ 200,000		$ 200,000
San Bernardino Gen. Station: SPS-2 Relays		$ 200,000		$ 200,000
Telecommunications				
Line Protection and RTU	$ 1,678,000	$ -	$ 587,000	$ 2,265,000
SPS-2		$ 200,000		$ 200,000
Power System Control				
New RTU at Blythe II Generating Facility	$ 80,000	$ -	$ 28,000	$ 108,000
Upgrade RTU at Midpoint Sub.		$ 25,000		$ 25,000
TOTAL	$ 3,787,000	$ 6,944,000	$ 1,326,000	$ 12,057,000

CASE B - ELEMENTS REQUIRED BY EARLIER INTERCONNECTIONS (May become the Responsibility of the Project)

Transmission				
Devers - Palo Verde (DPV1) 500kV T/L: Loop into Midpoint Substation	$ -	$ 3,506,000		$ 3,506,000
Devers - Harquahala(DPV2) 500kV T/L: Loop into Midpoint Substation	$ -	$ 3,506,000		$ 3,506,000
Devers - Valley No.1 500kV T/L: Relocate to Outdoor Switchyard at Valley Sub.	$ -	$ 1,725,000		$ 1,725,000
Devers - Valley No.2 500kV T/L: New 42-Mile Line	$ -	$ 94,600,000		$ 94,600,000
Substations				
Midpoint Substation: 500kV Interconnection Facility (Prior to Caithness Blythe II)	$ -	$ 32,545,000		$ 32,545,000
Devers Substation: Upgrade Existing Valley No.1 500kV Line Position to 4000A	$ -	$ 8,889,000		$ 8,889,000
Devers Substation: New Line Position for Devers - Valley No.2 500kV T/L	$ -	$ 6,227,000		$ 6,227,000
Valley Substation: New Outdoor Line Position for the relocated Devers - Valley No.1 500kV T/L	$ -	$ 6,227,000		$ 6,227,000
Valley Substation: New Line Position for Devers - Valley No.2 500kV T/L	$ -	$ 6,227,000		$ 6,227,000
Vista Substation: Replace Line Drops at Mira Loma 220kV Line Position	$ -	$ 69,000		$ 69,000
Devers Substation: SPS-1 Relays	$ -	$ 200,000		$ 200,000
Midpoint Substation: SPS-1 Relays	$ -	$ 200,000		$ 200,000
California Capacitors on DPV1 - Upgrade to 4000A / 5400A	$ -	$ 10,000,000		$ 10,000,000
California Capacitors on DPV2 - Upgrade to 4000A / 5400A	$ -	$ 10,000,000		$ 10,000,000
West of Devers Upgrades	$ -	$ 101,189,000		$ 101,189,000
CB Replacements & Upgrades related to the West of Devers Upgrades	$ -	$ 6,261,000		$ 6,261,000
Telecommunications				
Line Protection (prior to Caithness Blythe II)	$ -	$ 3,000,000		$ 3,000,000
SPS-1	$ -	$ 200,000		$ 200,000
TOTAL	$ -	$ 294,571,000	$ -	$ 294,571,000

This document includes confidential trade secrets and proprietary information of Southern California Edison, to be used only by Caithness Blythe II in connection with its evaluation of this Facility Study Proposal. Southern California Edison retains all rights to maintain the confidentiality of this information and requests that Caithness Blythe II preserve its confidentiality.

* ITCC tax (calculated at 35%) is collected via Letter of Credit.

2009 Dollars were estimated based on Present Day Costs (2007) escalated at a rete of 3.5% per year compounded annually.

E. A. ROMERO
UPDATED 02/01/07

ATTACHMENT 5

FIGURE 6-3

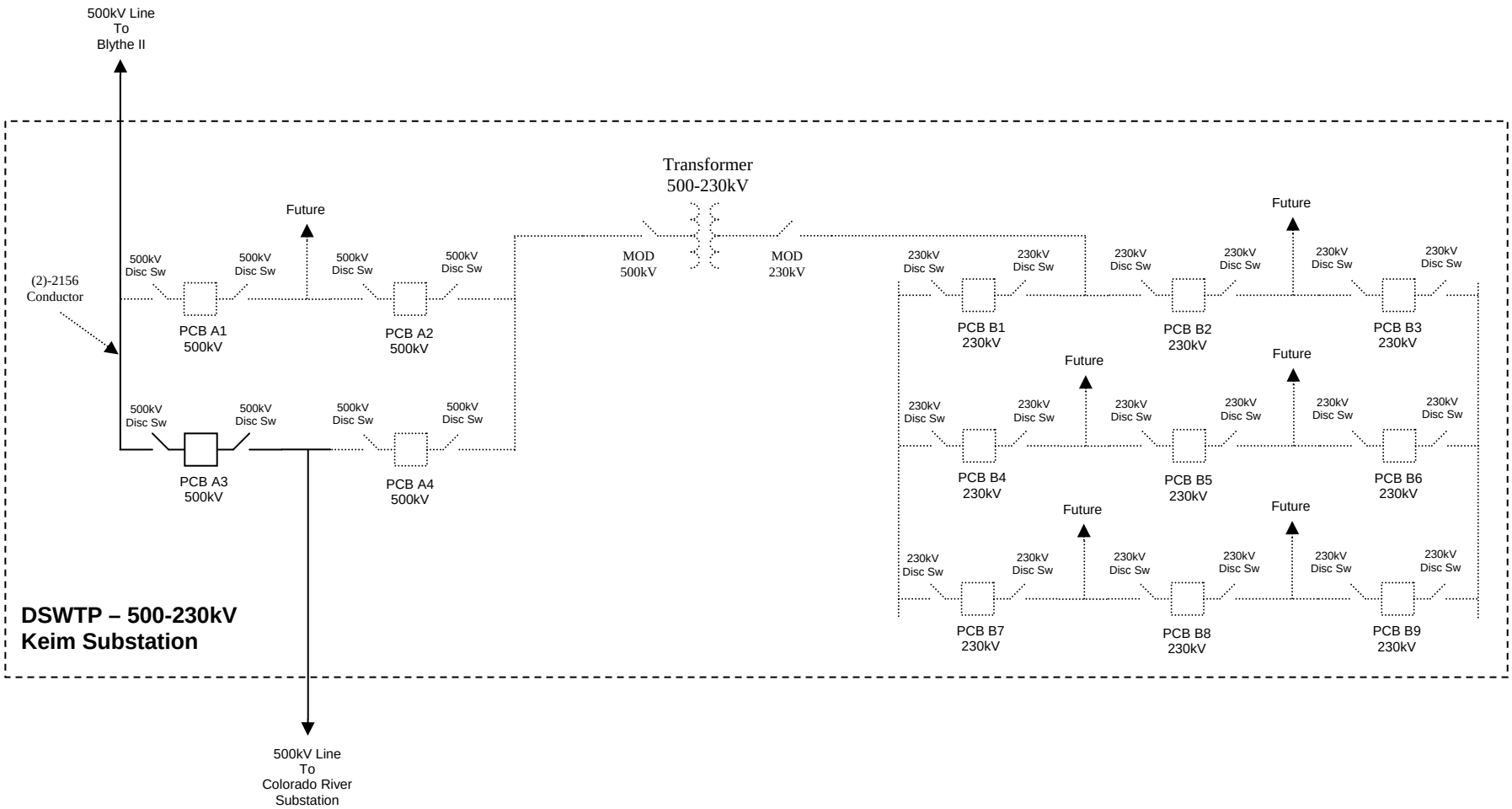

Figure 6-3

	DATE: 08/19/10 REV: A	**DSWTP – KEIM SUBSTATION** **ONE-LINE**	DWG NO **002**

ATTACHMENT 6

FIGURE 6-4

DSWTP: 230-500KV KEIM SUSTATION

SUBJECT PRELIMINARY PLOT PLAN

JOB NO.

SHEET NO. ____ OF ____

BY CC DATE

CK. BY ____ DATE ____

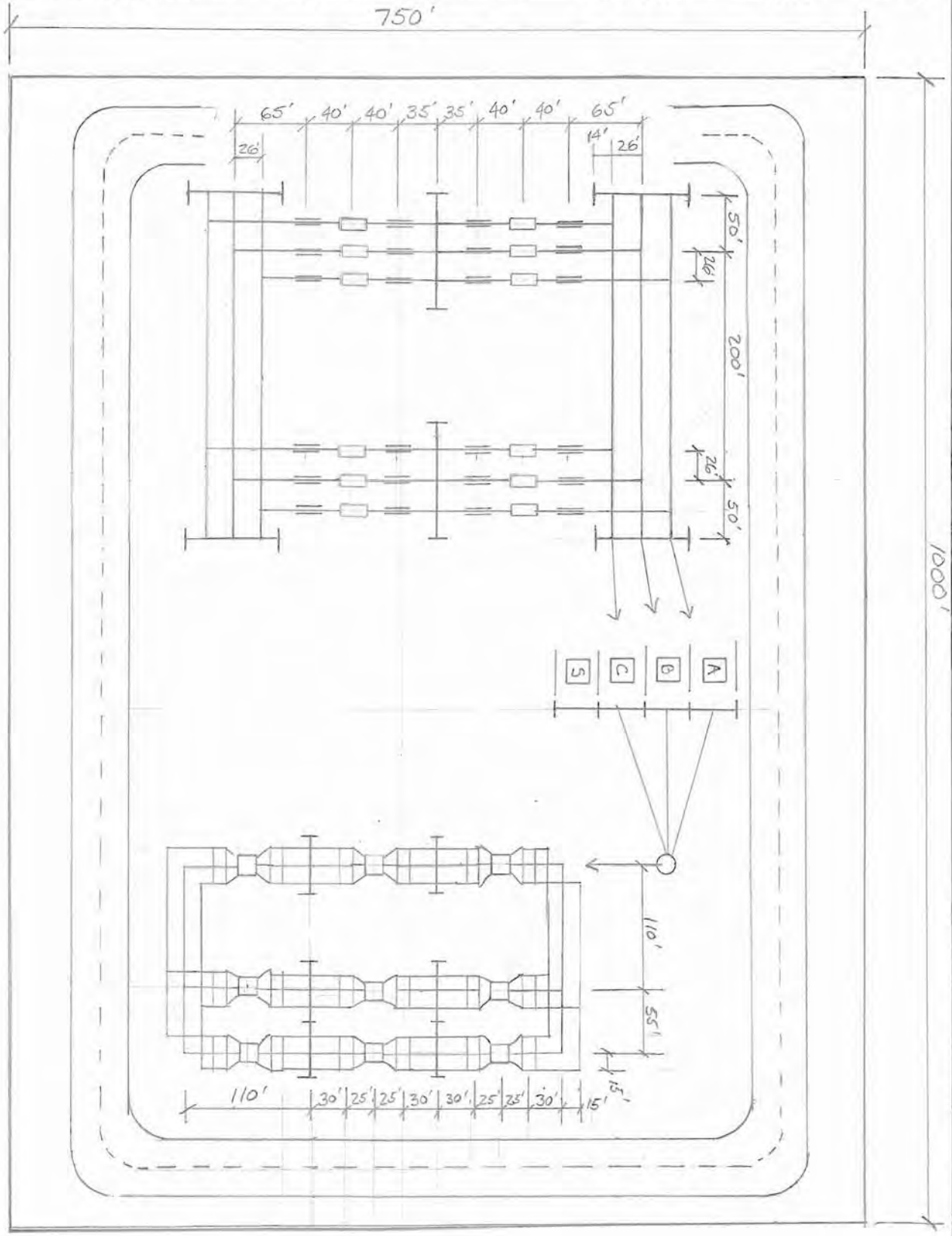

FIGURE 6-4

ATTACHMENT 7

FIGURE 6-5

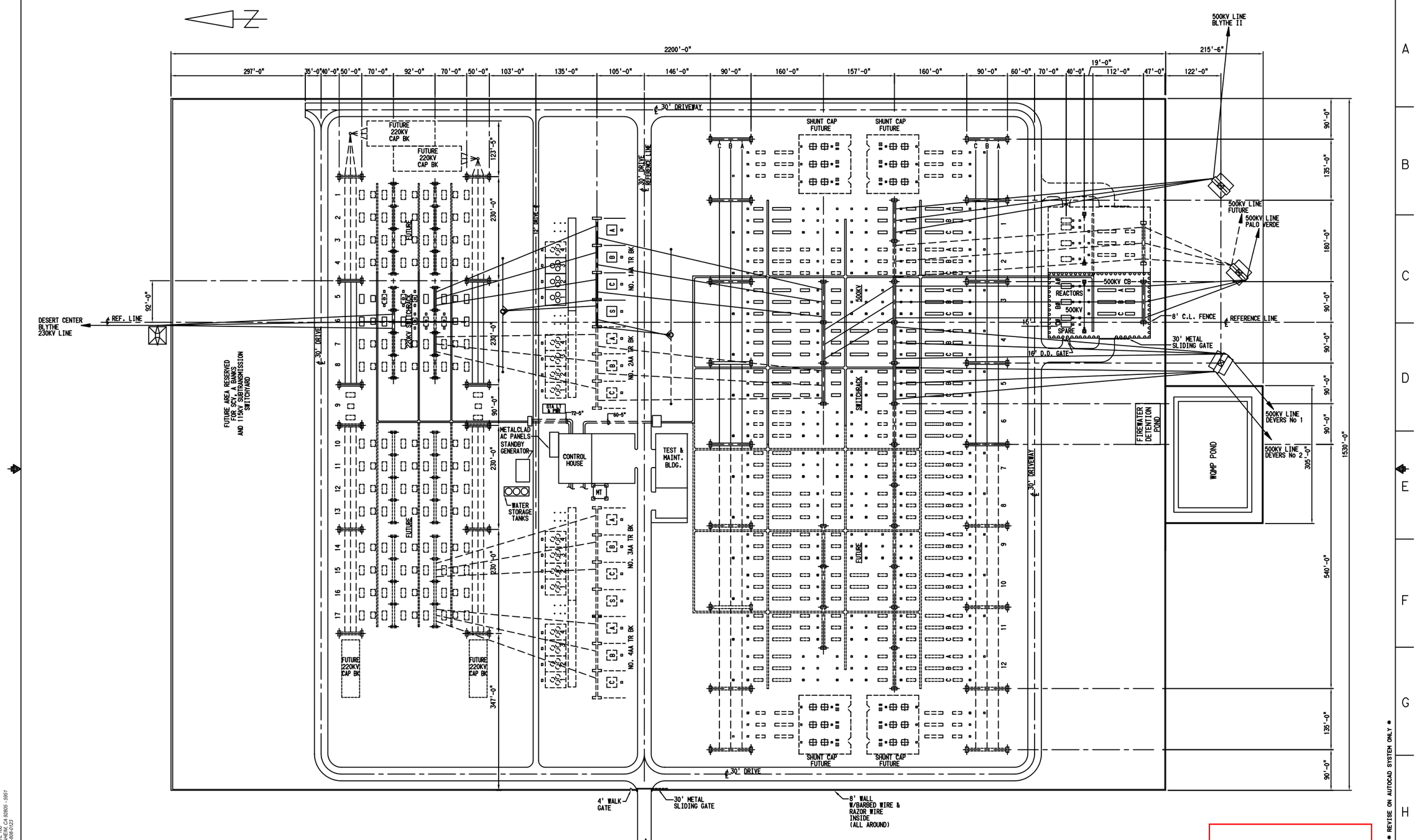

FIGURE 6-5

* REVISE ON AUTOCAD SYSTEM ONLY *

POWER ENGINEERS
731 E. BALL ROAD
SUITE 100
ANAHEIM, CA 92805 - 5951
714-666-9123

REFERENCE DRAWINGS		REFERENCE DRAWINGS	NO.	REVISIONS	DATE	SAP WO	SUPV	APPROVED	ENGR	CK'D	MADE	P.E.	NO.	REVISIONS	DATE	SAP WO	SUPV	APPROVED	ENGR	CK'D	MADE	P.E.
	1LSSH2	ONE LINE FOR SPECIFICATION SH. 2																				
	1LSSH1	ONE LINE FOR SPECIFICATION SH. 1											0	INITIAL ISSUE							PEI	

LOCATION: COLORADO RIVER SUBSTATION

PLOT PLAN
FOR SPECIFICATION

SOUTHERN CALIFORNIA EDISON An EDISON INTERNATIONAL Company

SHEET NO. E

SCALE: 1"=80'-0"

____ OF ____ SHTS.

02-22-10 LOC/PEI

SE E4-552-CADD 03-95

COLORADO RIVER PRELIM PP ULT-0

ATTACHMENT 8

FIGURE 6-6

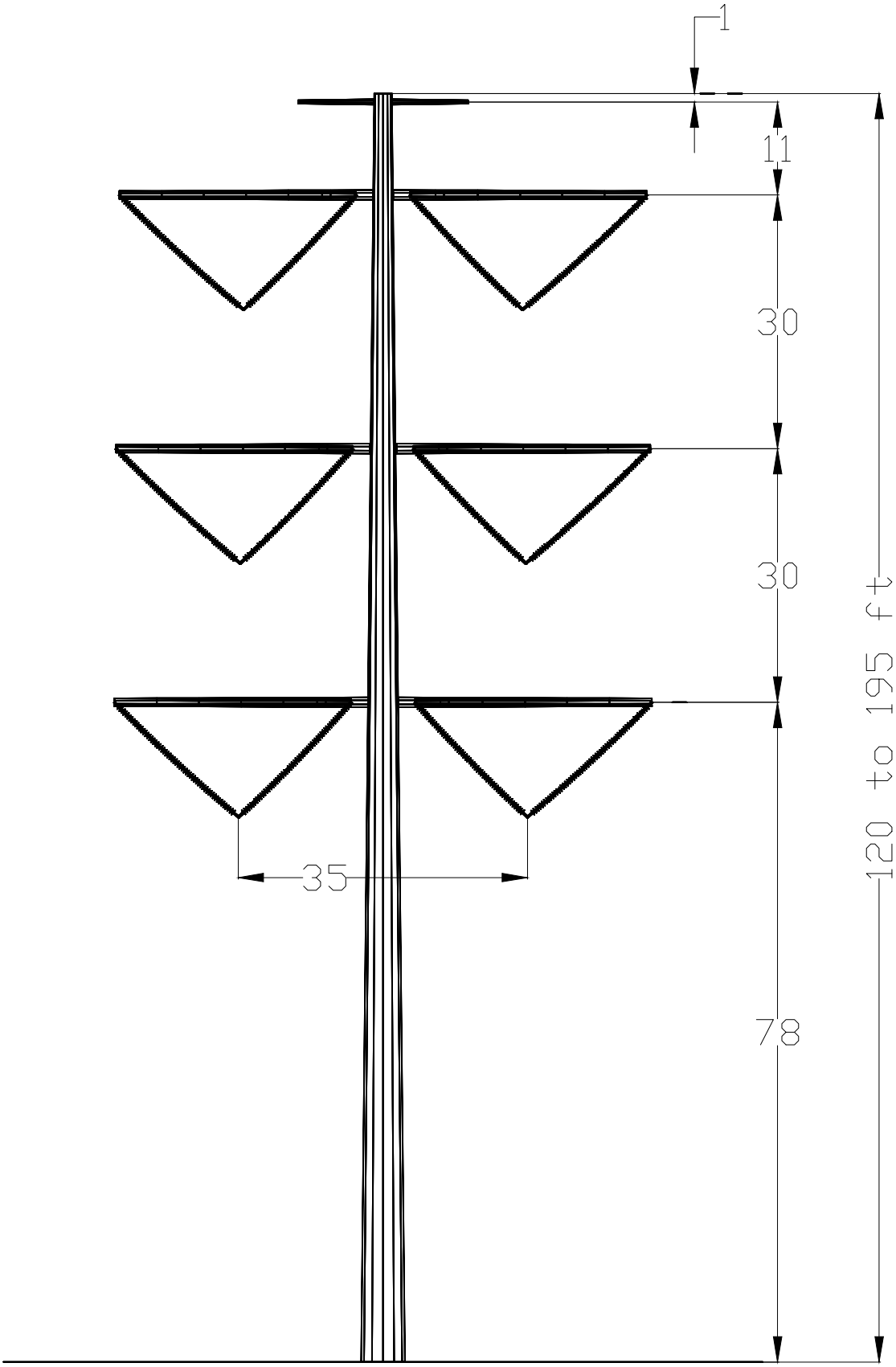

KEIM TO COLORADO RIVER SUBSTATION
500-kV DOUBLE CIRCUIT TUBULAR STEEL POLE

FIGURE 6-6

ATTACHMENT 9

SYSTEM IMPACT STUDY

CAITHNESS – BLYTHE II, LLC
BLYTHE II GENERATION SYSTEM IMPACT STUDY

SYSTEM PLANNING STUDY

March 15, 2006

Prepared by
David Franklin

Southern California Edison Company

Patricia L Arons

EXECUTIVE SUMMARY

INTRODUCTION

Caithness Blythe II ("BEPII") applied to the California Independent System Operator ("ISO") for interconnection pursuant to the ISO Tariff. BEPII proposes to construct the Blythe Energy Project II located in Blythe, California ("Project") and interconnect the Project to the 500 kV switchrack at a new Southern California Edison Company ("SCE") Substation ("Midpoint Substation") adjacent to SCE's Devers - Palo Verde 500 kV (DPV1) transmission line to transmit 520 MW to the ISO controlled grid.

Southern California Edison Company ("SCE") performed a System Impact Study for the Project as requested by BEPII. The purpose of this study is to assess the Project's impact on SCE's transmission system, and to conduct other analysis to determine if the proposed Project requires transmission system modifications. This is needed in order to maintain system reliability in accordance with CA-ISO Planning Criteria. The study includes assessments of power flow and voltages (steady-state and post-transient), short circuit duties, and transient stability.

Results of the System Impact Study will be used as the basis to determine the Project cost allocation for facility upgrades in the Facilities Study. The study accuracy and results for the assessment of the system adequacy are contingent on the accuracy of the technical data provided by BEPII.

The study was performed with 2009 heavy autumn load forecast with maximum autumn EOR/WOR power flow and includes projects queued ahead of this Project. The autumn case was selected because historically during autumn seasonal conditions the Arizona – California system is most heavily stressed. Several regional generation patterns were modeled, including maximized generation offset in the LA Basin to fully stress DPV1.

The following report provides detailed study assumptions and conditions of the system in which the study was conducted. Furthermore, results of Power Flow (steady state and post-contingency), Post-Transient Voltage Stability, Transient Stability, and Short-Circuit Duty assessments were completed for this study. Complete details of the study scenarios are attached (Attachment 1).

Four scenarios were modeled to simulate the Project with and without the Devers – Palo Verde 500kV #2 transmission line project (DPV2) Power flow studies were conducted under 2009 heavy autumn conditions. Further description of case assumptions follows:

Case 1: 2009 Heavy Autumn Pre-Project case without the DPV2;

Case 2: 2009 Heavy Autumn Pre-Project case with DPV2;

Case3: 2009 Heavy Autumn Post-Project case without DPV2 (Case 1 plus Project interconnection to Midpoint substation, natural flow case);

Case 4: 2009 Heavy Autumn Post-Project case without DPV2 and with increased series compensation on DPV1 to deliver an additional 520MW to the Devers 500kV substation (Case 3 with approximately 64% series compensation on the DPV1 500kV line);

Case 5: 2009 Heavy Autumn Post-Project case with DPV2 (Case 2 plus Project interconnection to Midpoint substation, natural flow case);

Case 6: 2009 Heavy Autumn Post-Project case with DPV2 and with increased series compensation on both DPV1 and DPV2 to deliver an additional 520MW to the Devers 500kV substation (Case 5 with approximately 68% series compensation on the DPV1 500kV line and 70% series compensation on the DPV2 500kV line)

SUMMARY RESULTS:

Without DPV2:

The Project adversely affects SCE's transmission system. The addition of the Project results in new base case overloads on the Devers – Vista #1 and #2 230 kV and Midpoint – Devers 500 kV transmission line series capacitors for both natural flow and compensation level increase, and increases an overload triggered by TOT101 on the Devers – San Bernardino 230 kV transmission line.

Congestion management may be an alternative to mitigate these overloads if the CA-ISO deems the extent and duration of the congestion to be acceptable.

If the DPV2 transmission line project does not materialize, N-1 overloads on the West-of-Devers 230 kV transmission lines were identified on the Devers – Vista #1 & #2 230 kV and the Devers – San Bernardino #1 & #2. The Project compounds N-1 overloads that were previously identified with projects ahead of the TOT101 transmission line project, which are increased for both the natural flow and compensation increase cases.

With DPV2

For base case conditions, the Project results in base case overloads on the Devers – Valley 500kV transmission line GIS riser and wavetrap. The Project compounds an overload triggered by the TOT101 project. The overload is increased for both the natural flow and compensation increase.

For the N-1 loss of Etiwanda – San Bernardino 230 kV transmission line, the Project results in an overload on the San Bernardino – Vista 230 kV transmission line for both natural flow and series compensation increase.

For the loss of either Midpoint – Devers 500 kV #1 or #2 transmission line, the loading on the Midpoint – Devers #1 or #2 series capacitors exceed the emergency thermal limitation of 3645A.

For the N-1 loss of Devers – Valley 500 kV transmission line, the Devers 500/230 kV transformer banks exceed the thermal limitations of 110% of the normal rating.

For the loss of the Devers – Valley 500 kV Transmission Line, the loading on the Etiwanda – Vista 230 kV transmission line exceeds the thermal capabilities of the line riser, disconnects, and wavetrap of 2000A.

For the loss of the Devers – Valley 500 kV Transmission Line, the loading on the Mira Loma – Vista 230 kV transmission line exceeds the thermal capabilities of the line risers and disconnects of 2000A.

For the loss of the Devers – Valley 500 kV transmission line, the loading on the Devers – Vista 230 kV transmission lines exceed its thermal limitation of 2850A.

Series Compensation Increase:

To inject 520MW into the Devers 500kV Substation, via Midpoint – Devers 500 kV transmission line, without DPV2, the series compensation increased to 64% on DPV1.

To inject 520MW into the Devers 500kV Substation, via Midpoint – Devers 500 kV transmission line, with DPV2, the series compensation increased to 68% on DPV1 and 70% on DPV2.

TRANSIENT STABILITY

No problems were identified for transient stability analyses.

POST TRANSIENT STABILITY

The Project does not result in large changes to the voltage stability characteristics of SCE's system. All single contingencies were within the 7% post-transient limit for percent voltage change. All double contingencies were well within the 10% post-transient limit for percent voltage change.

SHORT CIRCUIT DUTY

Three Phase Short Circuit Duty:

Evaluate the need for circuit breaker replacement at 13 bulk power substations.

Single Line to Ground Short Circuit:

Evaluate the need for circuit breaker replacement at 11 bulk power substations.

CONCLUSIONS

The following are recommended upgrades to mitigate the identified overloads:

1. Review feasibility and develop costs associated with upgrades to mitigate base case overloads

Without DPV2

If the DPV2 transmission line project does not materialize, then develop the costs to reconductor the west-of-Devers 230 kV transmission lines; Devers – Vista #1 & #2 and Devers – San Bernardino #1 230 kV transmission lines, and Midpoint – Devers 500 kV transmission lines for both the natural flow and the compensation level increase scenarios. The Project also compounds a base case overload on the Devers – San Bernardino 230 kV transmission line that was triggered by TOT101.

Although upgrading the Midpoint – Devers 500 kV series capacitor to accommodate the additional flow on DPV1 would mitigate thermal overloads, further engineering evaluation during the facility study would need to be performed to determine if there are any clearance limitations for base case.

Develop the cost for the series compensation increase. A study has been performed for series compensation increase up to 70% and confirmed that Thyristor Controlled Series Capacitors could be used to mitigate SSR concerns. Although a SSR study was performed with 70% series compensation on DPV1 and DPV2, further studies are required with the proposed new Midpoint 500 kV Substation. The series capacitors require a 4000A rating.

With DPV2

Develop the cost to upgrade the Devers – Valley 500kV transmission line GIS riser and wavetrap to 4000A

Develop the cost for increasing the series compensation level on DPV1 and DPV2.

2. Review feasibility and develop costs associated with upgrades to mitigate N-1 contingency overloads

Without DPV2

If the DPV2 transmission line project does not materialize, then develop the costs to reconductor the west-of-Devers 230 kV transmission lines; Devers – Vista #1 & #2 230 kV and Devers – San Bernardino #1 & #2. The above base case West-of-Devers 230kV mitigation alternatives would also mitigate the N-1 overloads on the Devers – Vista #1 & #2 and Devers – San Bernardino #1 230kV transmission lines.

The base case overload mitigation plan for the Midpoint – Devers 500kV series capacitors would also mitigate the N-1 overload on this capacitor.

Although upgrading the Midpoint – Devers 500 kV series capacitor to accommodate the additional flow on DPV1 would mitigate thermal overloads, further engineering evaluation during the facility study would need to be performed to determine if there are any clearance limitations for base case.

Upgrade the Devers – Valley GIS riser and wavetrap.

With DPV2

Develop the costs to construct a second San Bernardino – Vista 230 kV transmission line, or

Develop the costs to accelerate the second Devers – Valley 500 kV transmission line project as an alternative to mitigate N-1 overloads on the San Bernardino – Vista #2 230 kV transmission line, or evaluate potential future SCE facility upgrades.

Develop the cost to upgrade the series capacitors to accommodate 4 N-1 500 Amps.

Develop the cost to install a third Devers 500/230 kV transformer bank.

Develop the cost to reconductor the Devers – Vista #1 & #2 230 kV lines to 2B-1590

Develop the cost to upgrade the Etiwanda – Vista 230 kV transmission line disconnects, line risers, and wavetrap at the Etiwanda Substation to 3000A.

Develop the cost to upgrade the Mira Loma – Vista 230 kV transmission line disconnects and risers to 3000A.

3. Review feasibility and develop costs associated with upgrades to mitigate N-2 contingency overloads

The base case or N-1 mitigation plans will mitigate the N-2 overloads.

4. Short Circuit Duty

Three Phase Short Circuit Duty

Evaluate the need for circuit breaker replacement at 13 bulk power substations.

		Min	PRE CASE		POST CASE		
Bus Name	Bus KV	Rating	X/R	KA	X/R	KA	DELTA KA
LUGO	500	37.8	21.2	42.1	21.1	42.2	0.1
MIRALOMA	500	38.4	24.2	32.6	24.1	32.7	0.1
SERRANO	500	40	23.5	27.8	23.4	27.9	0.1
BARRE	230	45.6	18.5	48.9	18.5	49	0.1
CHINO	230	50	17.3	46.7	17.2	46.8	0.1

DEVERS	230	33	20.8	42.4	20.8	43.3	0.9
ETIWANDA	230	34	20.3	40	20.2	40.1	0.1
MIRAGE	230	25	9.5	15.1	9.5	15.2	0.1
MRLOMA E	230	63	22.8	53.5	22.7	53.6	0.1
MRLOMA W	230	63	20.6	49.3	20.5	49.4	0.1
OLINDA	230	37.7	14	26.9	13.9	27	0.1
SANBRDNO	230	50	21.9	38	21.8	38.1	0.1
SERRANO	230	63	23.5	51.6	23.5	51.7	0.1
VISTA	230	40	19.8	45.4	19.8	45.6	0.2
BLYTHESC	161	31.5	12.4	19.6	12.6	19.8	0.2
DEVERS	115	23	46	24.1	46.3	24.2	0.1
VALLEY A	115	0	53.4	17.6	53.3	17.7	0.1
VALLEY C	115	0	50.6	17.6	50.5	17.7	0.1

Single Line to Ground Short Circuit

Evaluate the need for circuit breaker replacement at 11 bulk power substations.

		Min	PRE CASE		POST CASE		
Bus Name	Bus KV	Rating	X/R	KA	X/R	KA	DELTA KA
Barre	230	45.6	13.1	42.4	13.1	42.5	0.1
Blythe	161	31.5	12.3	19.7	12.3	20	0.3
Chino	230	50	12.8	38.9	12.7	39	0.1
Devers	230	33	16.2	46	16.3	46.8	0.8
Lewis	230	45.6	15.4	39.1	15.4	39.2	0.1
Mira Loma	525	38.4	14.8	30.1	14.8	30.2	0.1
Mira Loma B	230	63	12.7	55	12.7	55.1	0.1
San Ber'dino	230	50	19.2	40.3	19.2	40.4	0.1
Serrano	525	40	13.9	25.2	13.9	25.3	0.1
Vincent A	230	63	15.8	49.2	15.8	49.3	0.1
Vista	230	40	13.6	39.7	13.6	39.8	0.1

TABLE OF CONTENTS

INTRODUCTION 2

BEPII GENERATION PROJECT 8

A. SYSTEM CONDITIONS 8

B. LOAD FLOW STUDY 8

C. TRANSIENT STABILITY 9

D. POST-TRANSIENT VOLTAGE STABILITY STUDY 9

E. SHORT CIRCUIT DUTY STUDY 10

RESULTS 10

1. POWER FLOW ANALYSES 10

2. TRANSIENT STABILITY 18

3. POST TRANSIENT 18

4. SHORT CIRCUIT DUTY 19

APPENDIX 1

N-1 & N-2 CONTINGENCIES

ATTACHMENTS

ONE LINE-DIAGRAMS

POWER FLOW RESULTS

POWER FLOW PLOTS

TRANSIENT STABILITY PLOTS

INTRODUCTION

Caithness Blythe II ("BEPII") applied to the California Independent System Operator ("ISO") for interconnection pursuant to the ISO Tariff. BEPII proposes to construct the Blythe Energy Project II located in Blythe, California ("Project") and interconnect the Project to the 500 kV switchrack at a new Southern California Edison Company ("SCE") Substation ("Midpoint Substation") adjacent to SCE's Devers - Palo Verde 500 kV (DPV1) transmission line to transmit 520 MW to the ISO controlled grid.

Southern California Edison Company ("SCE") performed a System Impact Study for the Project as requested by BEPII. The purpose of this study is to assess the Project's impact on SCE's transmission system, and to conduct other analysis to determine if the proposed Project requires transmission system modifications. This is needed in order to maintain system reliability in accordance with CA-ISO Planning Criteria. The study includes assessments of power flow and voltages (steady-state and post-transient), short circuit duties, and transient stability.

Results of the System Impact Study will be used as the basis to determine the Project cost allocation for facility upgrades in the Facilities Study. The study accuracy and results for the assessment of the system adequacy are contingent on the accuracy of the technical data provided by BEPII.

The study was performed with 2009 heavy autumn load forecast with maximum autumn EOR/WOR power flow and includes projects queued ahead of this Project. The autumn case was selected because historically during autumn seasonal conditions the Arizona – California system is most heavily stressed. Several regional generation patterns were modeled, including maximized generation offset in the LA Basin to fully stress DPV1.

The following report provides detailed study assumptions and conditions of the system in which the study was conducted. Furthermore, results of Power Flow (steady state and post-contingency), Post-Transient Voltage Stability, Transient Stability, and Short-Circuit Duty assessments were completed for this study. Complete details of the study scenarios are attached (Attachment 1).

STUDY CONDITIONS AND ASSUMPTIONS

Planning Criteria

The study was conducted by applying the SCE Transmission Planning Criteria and Guidelines, as well as the CAISO Reliability Criteria. More specifically, the main criteria applicable to this study are shown in the table below:

	Normal Condition Base Case Rating	**N-1 Contingency Rating**	**N-2 Contingency Rating**
Transmission Lines	100% normal continuous	115% normal continuous*	135% normal continuous*
Banks (AA-Banks)	100% of Nameplate (NPL)	110% of Nameplate (24-hours)#	110% of Nameplate (24-hours)#

Banks (AA-Banks) Purchased after 1970		150% of Nameplate (1-hour)#	150% of Nameplate (1-hour)#

* Except when specific lower limitations have been identified

\# If no factory heat run studies (FHR) or load capability studies (LCS) are available. Higher limits can be used if FHR or LCS is available, as long as they do not exceed 120% and 160% of NPL for long-term and short-term respectively.

For AA-Banks purchased before 1970, the above limits are the same, except for the long-term limit, which is only 100% of Nameplate. The main criteria applicable to this study are as follows:

Power Flow Analysis

The following study criteria were used to evaluate power flow performance for both pre- and post-contingency analysis:

Normal Conditions

i. Under normal conditions, bus voltages must be maintained between 0.95 per unit and 1.05 per unit, except for the Palo Verde 500-kV bus voltages which must be maintained between 1.0 per unit and 1.02 per unit (525-kV base).

ii. All line and transformer loadings must be below normal continuous ratings.

Single Contingency Outage Conditions

i. For a single contingency, no transmission element will be loaded above its emergency rating.

ii. Established loading limits for other utilities will be monitored.

iii. Equipment emergency voltage limits (high or low) will not be exceeded for single contingency outages.

iv. Bus voltage deviations from the base case voltage shall not exceed established planning limits (These limits may vary throughout the system).

v. Single contingency outages on the 230-kV and EHV systems will not result in loss of load.

Planning Criteria

The study was conducted by applying the CAISO Reliability Criteria. More specifically, the main criteria applicable to this study are as follows:

Power Flow Assessment

The following contingencies are considered for transmission and sub-transmission lines and 500/230 kV transformer banks (“AA-Banks”):

- Single Contingencies (loss of one line or one AA-Bank)
- Credible Double Contingencies (loss of two lines or one line and one AA-Bank)
    - Outages of two AA-Banks are beyond the Planning Criteria

The following reliability criteria are used:

Transmission Lines	Base Case	Limiting Component Normal Rating
	N-1	Limiting Component Emergency-Rating
	N-2	Limiting Component Emergency-Rating
AA-Banks	Base Case	Normal Loading Rating
	Long Term & Short Term	Bank Emergency-Rating

System upgrades for transmission lines are generally recommended for all reliability criteria violations. Special Protection Schemes (SPS) may be allowed for single contingency and credible double contingencies reliability criteria violation in place of system upgrade.

Congestion Assessment

The following principles were used in determining whether congestion management, special protection schemes, or facility upgrades are required to mitigate base case, single contingency, or double contingency overloads:

Congestion management, as a means to mitigate base case overloads, can be used if it is determined to be manageable and the CAISO concurs with the implementation.

Facility upgrades will be required if it is determined that the use of congestion management is unmanageable as defined in the congestion management section that follows.

SPS, in lieu of facility upgrades, will be recommended if the scheme is effective, does not jeopardize system integrity, does not exceed the current CAISO single and double contingency tripping limitations, does not adversely effect existing or proposed special protection schemes in the area, and can be readily implemented.

Facility upgrades will be required if use of protection schemes is determined to be ineffective, the amount of tripping exceeds the current CAISO single and double contingency tripping limitations, adverse impacts are identified on existing or currently proposed special protection schemes, or the scheme cannot be readily implemented.

Congestion management in preparation for the next contingency will be required, with CAISO concurrence, if no facility upgrades or special protection schemes are implemented.

The following study method was implemented to assess the extent of possible congestion:

Under Base Case with all transmission facilities in service, the system was evaluated with all existing interconnected generation and all generation requests in the area that have a queue position ahead of this request (pre-project).

Under Base Case with all transmission facilities in service, the system was reevaluated with the inclusion of the Project (post-project).

If the normal loading limits of facilities are exceeded in (a), the overload is identified as an existing overload that was triggered by a project in queue ahead of the Project. If the normal loading limits of facilities are exceeded in (b) and were not exceeded in (a), the overload is identified as triggered by the addition of the Project. The Project, assuming it is a market participant, and other market participants in the area may be subjected to congestion management, potential upgrade cost and/or participation of any proposed special protection scheme if the project addition aggravates or triggers the overload. Additionally, the Project may have to participate in mitigation of overloads triggered by subsequent projects in queue, subject to FERC protocols and policies.

In order for congestion management to be a feasible alternative to system facilities, all of the following factors need to be satisfied:

Time requirements for necessary coordination and communication between the CAISO operators, scheduling operators and SCE operators.

Distinct Path/Corridor rating should be well defined so monitoring and detecting congestion and implementing congestion of the contributing generation resources can be performed when limits are exceeded.

Sufficient amount of market generation in either side of the congested path/corridor should be available to eliminate market power.

Manageable generation in the affected area is necessary so that operators can implement congestion management if required (i.e. the dispatch schedule is known and controllable).

The results of these studies should identify:

If capacity is available to accommodate the proposed Project and all projects ahead in queue without the need for congestion management, special protection schemes, or facility upgrades

If overloads exist in the area after the addition of all projects in queue ahead of the Project and all facilities in service

If congestion exists in the area with the addition of the Project and all projects ahead in queue under single and double element outage conditions assuming no new special protection schemes are in place

If sufficient capacity is maintained to accommodate all Must-Run and Regulatory Must-Take generation resources with all facilities in service

If sufficient capacity is maintained to accommodate the total output of any one generation resource which is not classified as Must-Run.

Post-Transient Voltage Stability Analysis

The following assumptions were modeled in the studies:

a) All loads will be modeled as constant power during the first few minutes following an outage or disturbance.

b) All voltages at distribution substations will be restored to normal values by the transformer tap changers and other voltage control devices.

c) Generator VAR limits will be modeled as a single value for each generator since the reactive power capability curve will not be modeled in the power flow program.

d) There will be no manual operator intervention to increase the generator VAR output.

e) Remedial actions such as generator dropping, load shedding and blocking of automatic generation control (AGC) will not be considered.

h) Other Assumptions

· Area Interchange: Disabled;

· Governor Blocking: Per WECC Modeling & Validation Work Group recommendations - Diablo, Palo Verde, and San Onofre;

· DC Line Transformer Tap Automatic Adjustment: Enabled;

· Generator Voltage Control set to local except for San Onofre, Palo Verde, and selected Northwest generation;

· Phase Shifter Control: Disabled;

· Switched Shunt Devices: Disabled - except in Sierra Pacific Power's system.

The transient voltage dips should meet the following combined SCE and WECC Reliability Criteria:

a)

Performance Level	Disturbance	Post Transient Voltage Deviations
B	N-1	Not to exceed 7% at any bus.
C	N-2	NOT TO EXCEED 10% AT ANY BUS.
D	N-3	Cascading Not Permitted

Transient Stability Analysis

The following criterion was applied for the transient stability analysis:

a.) All machines in the system shall remain in synchronism as demonstrated by their relative rotor angles.

b.) All stability simulation cases will be run for a minimum of 10 seconds.

c.) Governors will be set out-of-service on steam generators with governor P-Max over 150 MW and loading over 90% of governor P-Max.

d.) System stability is evaluated based on the damping of the relative rotor angles and the damping of the voltage magnitude swings.

e.) The transient voltage dip should be maintained above 0.80 per unit at Adelanto and Sylmar.

f.) Other transient voltage dips must meet the following WECC Reliability Criteria:

Performance Level	Disturbance	Transient Voltage Dip Criteria
B	N-1	Transient Voltage Dip: Not to exceed 25% at load buses or 30% at non-load buses. Also, not to exceed 20% for more than 20 cycles at load buses. Minimum Transient Frequency: Not below 59.6 Hz for 6 cycles or more at a load bus.
C	N-2	Transient Voltage Dip: Not to exceed 30% at any bus. Also, not to exceed 20% for more than 40 cycles at load buses. Minimum Transient Frequency: Not below 59.0 Hz for 6 cycles or more at a load bus.
D	N-3	Not Specified

Short-Circuit Analysis

The following study assumptions were used for conducting the short-circuit analysis:

a) Shunt capacitor banks will be omitted at all stations. Normally, shunt capacitors produce a minimal effect on fault currents. When they are large enough to be significant, their effect is to reduce total fault current. Results are more conservative to neglect them altogether.

b) Shunt reactors will also be neglected since their contribution is minimal.

c) Reactors connected to autotransformer delta tertiary windings will be neglected since they cannot contribute fault current to the system.

d) Phase shifting transformers will be by-passed as this would be the worst case from the fault current standpoint.

e) If zero sequence data is not available, the assumption will be made that Xo=3X1 and Ro=0 or R1.

Circuit breakers exposed to fault currents in excess of 100 percent of their interrupting capacities will be replaced or upgraded, whichever is appropriate.

Subsynchronous Resonance Analysis (SSR)

Based on previous studies where series compensation exceeded 50%, SSR analysis has shown that problems may occur in the SCE or nearby systems. Therefore with the new Midpoint 500 kV Substation, if the series compensation alternative is selected, a SSR analysis will be required for 68% on DPV1 and 70% on DPV2.

BEPII GENERATION PROJECT

The project studied the 2009 Heavy Autumn case with high EOR/WOR flow. The light load condition is the worst case scenario with high flows on the Paths 49 & 46. Therefore, a heavy summer case was not evaluated for this study.

BEPII Proposes to interconnect to the new Midpoint 500 kV Substation.

A. System Conditions

To simulate the SCE transmission system for analysis, the study used a Western Arizona Transmission Studies ("WATS") approved planning case that modeled 2008, heavy autumn, heavy EOR flow. This starting WATS case was updated to represent system conditions in 2009. Most significantly, SCE's load was escalated to a 2009 forecast value, and associated resource adjustments were made to maintain an emphasis on heavy imports to Southern California from the desert southwest. These conditions were evaluated to identify worst case scenarios that would stress the SCE 500-kV and 230-kV Eastern transmission system networks.

B. Load Flow Study

Load flow studies were conducted under 2009 heavy autumn conditions. Further description of case assumptions follows:

Four scenarios were modeled to simulate the Project with and without the DPV2 project. Power flow studies were conducted under 2009 heavy autumn conditions. Further description of case assumptions follows:

Four scenarios were modeled to simulate the Project with and without the DPV2 project. Power flow studies were conducted under 2009 heavy autumn conditions. Further description of case assumptions follows:

Case 1: 2009 Heavy Autumn Pre-Project case without the DPV2;

Case 2: 2009 Heavy Autumn Pre-Project case with DPV2;

Case3: 2009 Heavy Autumn Post-Project case without DPV2 (Case 1 plus Project interconnection to Midpoint substation, natural flow case);

Case 4: 2009 Heavy Autumn Post-Project case without DPV2 and with increased series compensation on DPV1 to deliver an additional 520MW to the Devers 500kV substation (Case 3 with approximately 64% series compensation on the DPV1 500kV line);

Case 5: 2009 Heavy Autumn Post-Project case with DPV2 (Case 2 plus Project interconnection to Midpoint substation, natural flow case);

Case 6: 2009 Heavy Autumn Post-Project case with DPV2 and with increased series compensation on both DPV1 and DPV2 to deliver an additional 520MW to the Devers 500kV substation (Case 5 with approximately 68% series compensation on the DPV1 500kV line and 70% series compensation on the DPV2 500kV line)

Table 1: Power Flows and Loads

2009 EAST-OF-RIVER AND WEST-OF-RIVER FLOWS Total Imports LOAD AND LOSSES (MW)						
	Case 1	Case 2	Case 3	Case 4	Case 5	Case 6
EOR	7897	9,257	7,863	7,910	9,242	9,275
WOR	8884	11,074	9,389	9,412	11,567	11,552
Flow Into Devers	2329	3,538	2,635	2,842	3,852	4,038
Total Import	6302	7,691	6,822	6,822	8,211	8,211
Load	15,000	15,000	15,000	15,000	15,000	15,000
Losses	486.86	555.43	526.44	552.07	596.11	616.39

C. Transient Stability

Transient stability studies were performed to assess the impact on the dynamic performance of the system for a heavily stressed East-of-River scenario.

D. Post-Transient Voltage Stability Study

The power flow study voltage results were used as a screen to identify contingencies that may require additional post transient voltage studies. Contingencies used for this analysis were outlined in the study scope and are identified in the Planning Criteria section of this report.

The following Post Transient Voltage analyses were performed on the following contingencies:

- Devers-Mirage& Devers-Coachella 230kV Transmission Lines
- Devers-Valley 500kV Transmission Line
- Devers-Mirage & Ramon-Coachella 230kV Transmission Line
- Devers – Palo Verde-Julian Hinds-Mirage- Transmission Line
- Valley-Serrano 500kV Transmission Line
- Palo Verde-Devers 500kV Transmission Line

- Palo Verde-Midpoint 500kV Transmission Line
  Hassayampa-N. Gila 500kV Transmission Line

E. Short Circuit Duty Study

To determine the impact of the proposed transmission project on short circuit duties at buses in the SCE bulk transmission system, the study calculated the maximum symmetrical three-phase-to-ground short circuit duties at the most critical 230-kV and 500-kV buses.

RESULTS

1. POWER FLOW ANALYSES

A: Transmission Line Loadings:

Base Case Results

TABLE 2
BYTHE II GENERATION SYSTEM IMPACT STUDIES
WITHOUT DPV2
BASE CASE

From Bus Name	To Bus Name	TkV	ID	Amp/MVA Rating	Pre-Project (Case 1) Loading %	Natural Flow (Case 3) Loading%	Compensation Increase (Case 4) Loading%	Contingency Description
DEVERS	VSTA	230	2	1240	93.40%	99.70%	103.70%	Base Case
MIDPINTS	DEVERS	500	1	2700	99.90%	113.00%	122.20%	Base Case
SANBRDNO	DEVERS	230	1	795	110.20%	118.80%	124.10%	Base Case
VSTA	DEVERS	230	1	1150	99.60%	106.40%	110.60%	Base Case

The percent loadings are on the Normal ratings.

Devers – Vista #1 & #2 and San Bernardino - Devers 230 kV Transmission Lines

Finding:

The study resulted in base case overloads on the above west of Devers 230 kV transmission lines.

Conclusion:

The following would mitigate the west-of-Devers overload if the proposed DPV2 line and its associated West-of-Devers 230kV facility upgrades, or projects queued ahead of this Project that would otherwise mitigate the overload do not materialize:

- Reconductor the transmission lines with 2B-1033 ACSR

- Congestion management may be an alternative to mitigate these overloads if the CA-ISO deems that the extent and duration of the congestion is acceptable.

Midpoint – Devers 500 kV Transmission Line Series Capacitor

Finding:

For base case conditions, the loading on the Midpoint – Devers 500 kV transmission line series capacitor exceeded its thermal limit for both the BEPII natural power flow and increased series compensation cases.

Conclusion:

Upgrade the series capacitor to a higher rating of 4000A for the compensation increase scenario,

TABLE 3
BYTHE II GENERATION SYSTEM IMPACT STUDIES
WITH DPV2
BASE CASE

From Bus Name	To Bus Name	TkV	ID	Normal Amp Rating	(Pre-Project) (Case 2) Loading %	(Natural Flow) (Case 5) Loading %	(Compensation Increase) (Case 6) Loading %	Contingency Description
DEVERS	VALLEYSC	500	1	3000	105.7%	111.3%	115.3%	Base Case
MIDPOINT	DEVERS	500	1	2700	83%	91.9%	105.5%	Base Case

The percent loadings are on the Normal ratings.

<u>Devers - Valley 500 kV Transmission Line Line Riser and Wavetrap</u>

Finding:

For base case conditions, the loading on the Devers – Valley 500 kV transmission line riser and wavetrap exceeded its thermal limit for both the BEPII natural power flow and increased series compensation cases.

Conclusion:

Project TOT101 resulted in overloads on this GIS riser and wavetrap and is expected to mitigate the overload. If that project does not materialize, then these components would require an upgrade to 4000A.

N-1 Contingency Results

TABLE 4 BYTHE II GENERATION SYSTEM IMPACT STUDIES WITHOUT DPV2 N-1								
From Bus Name	*To Bus Name*	*TkV*	*ID*	*Normal/ N-1 Emergency Amp Ratings*	*(Pre-Project) (Case 1) Loading %*	*(Natural Flow) (Case 3) Loading %*	*(Compensation Increase) (Case 4) Loading %*	*Contingency Description*
DEVERS	SANBRDNO	230	2	1150/1150	140.5%	152.1%	161.6%	line DEVERS to VALLEYSC 500 ck 1
DEVERS	VALLEYSC	500	1	3000/3000	90.50%	97.80%	102.40%	line DEVERS to VSTA 230 ck 2
DEVERS	VSTA	230	2	1240/1240	157.3%	170.1%	179.5%	line DEVERS to VALLEYSC 500 ck 1
MIDPINTS	DEVERS	500	1	2700/3645	107.40%	120.80%	130.20%	line MOENKOPI to ELDORDO 500 ck 1
SANBRDNO	DEVERS	230	1	795/795	196.5.90%	212.7%	225.8%	line DEVERS to VALLEYSC 500 ck 1
SANBRDNO	DEVERS	230	1	795/795	108.00%	116.50%	121.60%	tran BUCK161 161 to BLY2CT2 16 ck 1
VSTA	DEVERS	230	1	1150/1150	167.8%	181.4%	191.5%	line DEVERS to VALLEYSC 500 ck 1

The percent loadings are on the Normal ratings.

Devers – Vista #1 & #2 230 kV Transmission Lines
Devers – San Bernardino #1 & #2 230 kV Transmission Lines

Finding:

The highest loadings on these transmission lines occurred for an N-1 loss of Devers - Valley 500 kV transmission line. This Project exacerbates the overloads that were previously identified with projects in the queue ahead of this Project.

Conclusion:

- The following is recommended to mitigate these overloads if those projects, including the proposed DPV2 line and its associated 230kV upgrades, that would otherwise mitigate the overloads, do not materialize:
    - Reconductor the transmission lines with 2B-1033 ACSR

Devers – Midpoint 500 kV Transmission Line Series Capacitor

Finding:

For the loss of several transmission lines, the loading on the Series Capacitor exceeds the thermal rating.

Conclusion:

Upgrade the series capacitor to 4000A.

Devers - Valley 500 kV Transmission Line GIS Riser and Wave Trap

Finding:

For the loss of several transmission lines, the loading on the GIS riser and wavetrap exceeds the thermal rating of 3000A.

Conclusion:

The TOT101 transmission line project resulted in overloads on this GIS riser and wavetrap and is expected to mitigate the overload. If that project does not materialize, then these components would require an upgrade to 4000A.

TABLE 5
BYTHE II GENERATION SYSTEM IMPACT STUDIES
WITH DPV2
N-1

From Bus Name	To Bus Name	TkV	ID	Normal/ N-1 Emergency Amp/MVA Ratings	(Pre-Project) (Case 2) Loading %	(Natural Flow) (Case 5) Loading %	(Compensation Increase) (Case 6) Loading %	Contingency Description
DEVERS	VALLEYSC	500	1	3000/3000	111.5%	118.20%	121.00%	line DEVERS to VSTA 230 ck 2
MOENKOPI	ELDORDO	500	1	1900/2600	101.50%	106.50%	101.80%	line MIDPINTS to DEVERS 500 ck 1
VSTA	SANBRDNO	230	2	3230/3710	113.41%	117.94%	123.0%	line ETIWANDA to SANBRDNO 230 ck 1
MIDPOINT	DEVERS	500	1	2700/3650	118.6%	133.8%	143.4%	line MIDPINTS to DEVERS 500 ck 2
MIDPOINT	DEVERS	500	2	2700/3650	138.40%	153.00%	164.8%	line MIDPINTS to DEVERS 500 ck 1
DEVERS	DEVERS	500/ 230	1	1120/1230 MVA	108%	116%	119%	line DEVERS to VALLEYSC 500 ck 1
DEVERS	DEVERS	500/ 230	2	1120/1230 MVA	108%	116%	119%	line DEVERS to VALLEYSC 500 ck 1
ETIWANDA	VISTA	230	1	2000/2000	98%	103.9%	105.2%	line DEVERS to VALLEYSC 500 ck 1
MIRLOMW	VISTA	230	1	2480/2850	107.2%	113.0%	114.4%	line DEVERS to VALLEYSC 500 ck 1
DEVERS	VISTA	230	1	2480/2850	110.9%	116.7%	118.3%	line DEVERS to VALLEYSC 500 ck 1
DEVERS	VISTA	230	2	2480/2850	110.9%	116.7%	118.3%	line DEVERS to VALLEYSC 500 ck 1

The percent loadings are on the Normal ratings.

San Bernardino-Vista 230kV #2 Transmission Line

The highest loadings on this transmission line occurred for an N-1 loss of the Etiwanda – San Bernardino 230kV or the Devers – Valley 500kV transmission lines.

Finding:

For the loss of the Etiwanda – San Bernardino 230kV line, this Project increases the loading on the San Bernardino-Vista 230kV line beyond its thermal conductor rating.

Conclusion:

The following 2 alternatives are recommended to mitigate this N-1 overload for the above scenarios:

- Construct a second San Bernardino – Vista 230 kV transmission line. The second line would reduce the loading on the San Bernardino – Vista line, or

- SCE is currently evaluating the need for a second Devers – Valley 500 kV transmission line. If the new line is constructed, it would mitigate the overload on the San Bernardino – Vista 230 kV transmission line. Accelerating the second Devers – Valley line project to the operation date of the Project, if feasible, would mitigate this transmission line overload.

Moenkopi – Eldorado 500 kV Transmission Line Series Capacitor

Finding:

For the loss of several transmission lines, the loading on these capacitors exceed the thermal rating.

The overloads are on the normal rating but do not exceed the emergency ratings. However, the emergency rating is only for 30 minutes.

Conclusion:

These series capacitors may need upgrades to a higher rating.

Devers - Valley 500 kV Transmission Line GIS Riser and Wave Trap

Finding:

For the loss of several transmission lines, the loading on the GIS riser and wavetrap exceeds the thermal rating of 3000A.

Conclusion:

Project TOT101 resulted in overloads on this GIS riser and wavetrap and is expected to mitigate the overload. If that project does not materialize, then these components would require an upgrade to 4000A.

Midpoint - Devers 500 kV Series Capacitor #1 & #2

Finding:

For the loss of either Midpoint – Devers 500 kV transmission line, the loading on the either Midpoint – Devers series capacitor exceeds the emergency thermal limitation of 3645A.

Conclusion:

The following 2 alternatives are recommended to mitigate this N-1 overload for the above scenarios:

- Install series capacitors capable of 4500 Amps, or
- Trip the Blythe 2 generation

Devers 500/230 #1&#2 Transformers

Finding:

For the N-1 loss of Devers – Valley 500 kV transmission line, the Devers 500/230 kV transformers bank exceed the thermal limitations of 110% of the normal rating.

Conclusion:

The following 2 alternatives are recommended to mitigate this N-1 overload for the above scenarios:

- Install a third Devers 500/230 kV transformer bank, or

Etiwanda – Vista 230 kV Transmission Line

Finding:

For the loss of the Devers – Valley 500 kV Transmission Line, the loading on the Etiwanda – Vista 230 kV transmission line exceeds the thermal capabilities of the line riser, disconnects, and wavetrap of 2000A.

Conclusion:

Upgrade the line risers, disconnects, and wavetrap at the Etiwanda Substation 230 kV to 3000A.

Mira Loma – Vista 230 kV Transmission Line

Finding:

For the loss of the Devers – Valley 500 kV Transmission Line, the loading on the Mira Loma – Vista 230 kV transmission line exceeds the thermal capabilities of the line riser, disconnects, and wavetrap of 2000A.

Conclusion:

Upgrade the line risers, disconnects, and disconnects to 3000A.

Devers – Vista 230 kV Transmission Lines #1 & #2

Finding:

For the loss of the Devers – Valley 500 kV transmission line, the loading on the Devers – Vista 230 kV transmission lines exceed its thermal limitation of 2850A.

Conclusion:

The following are 2 alternatives to mitigate these overloads:

- These transmission lines will be upgraded to 2B-1033 ACSR for the DPV2 transmission line project. Upgrade to the transmission lines to 2B-1590 ACSR.
- Accelerate the second Devers – Valley 500 kV transmission line project to the operating date of BEP2.

N-2 Contingency Results:

TABLE 6
BYTHE II GENERATION SYSTEM IMPACT STUDIES
WITHOUT DPV2
N-2

From Bus Name	To Bus Name	TkV	ID	Normal/ N-2 Emergency Amp Ratings	(Pre-Project) (Case 1) Loading %	(Natural Flow) (Case 3) Loading %	(Compensation Increase) (Case 5) Loading %	Contingency Description
DEVERS	SANBRDNO	230	2	1150/1150	121.60%	131.10%	136.60%	line outage 13
DEVERS	VALLEYSC	500	1	3000/3000	103.80%	112.50%	116.60%	line outage 36
DEVERS	VSTA	230	2	1240/1240	152.20%	162.10%	166.40%	line outage 36
SANBRDNO	DEVERS	230	1	795/795	171.70%	185.10%	193.00%	line outage 10
VSTA	DEVERS	230	1	1150/1150	162.30%	172.90%	177.50%	line outage 36

The percent loadings are on the Normal ratings.

Findings:

N-2 contingencies resulted in loadings that exceed N-2 emergency ratings for the following transmission lines:

Devers – Valley 500 kV Transmission Line
Devers – Vista #1 & #2 230 kV Transmission Lines
Devers – San Bernardino #1 & #2 230 kV Transmission Lines

Devers – Valley 500 kV Transmission Line

The above proposed N-1 mitigation plan to upgrade the wavetrap and GIS riser on the Devers – Valley 500 kV transmission line would mitigate this N-2 overload.

Devers – Vista #1 & #2 230 kV Transmission Lines
Devers – San Bernardino #1 & #2 230 kV Transmission Lines

The proposed mitigation plan for the N-1 loss of the Devers-Valley 500 kV transmission line would mitigate this overload for the N-2.

TABLE 7
BYTHE II GENERATION SYSTEM IMPACT STUDIES
WITH DPV2
N-2

From Bus Name	To Bus Name	TkV	ID	Normal/ N-2 Emergency Amp Ratings	(Pre-Project) (Case 2) Loading %	(Natural Flow) (Case 5) Loading %	(Compensation Increase) (Case 6) Loading %	Contingency Description
DEVERS	VALLEYSC	500	1	3000/3000	122.2%	130.3%	134.2%	line outage 36
MOENKOPI	ELDORDO	500	1	1900/2600	101.5%	106.5%	101.8%	line outage 26
VSTA	SANBRDNO	230	2	3230/3710	131.52%	137.1%	140.0%	line outage 2

The percent loadings are on the Normal ratings.

Findings:

N-2 contingencies resulted in loadings that exceed N-2 emergency ratings for the following transmission lines:

Devers – Valley 500 kV Transmission Line
San Bernardino – Vista 230 kV Transmission Line
Moenkopi – Eldorado 500 kV Transmission Line

Devers – Valley 500 kV Transmission Line

The above proposed base case mitigation plan to upgrade the wavetrap and GIS riser on the Devers – Valley 500 kV transmission line would mitigate this N-2 overload.

San Bernardino – Vista 230 kV Transmission Line

The proposed mitigation plan for the N-1 loss of the San Bernardino – Etiwanda 230 kV transmission line to either construct a second San Bernardino – Vista 230 kV transmission line or accelerate the proposed Devers – Valley 500 kV transmission line would also mitigate this N-2 contingency overload.

Moenkopi – Eldorado 500 kV Transmission Line Series Capacitor

The proposed mitigation plan for the N-1 contingency would mitigate this overload for the N-2.

2. TRANSIENT STABILITY

No problems were identified for transient stability analyses.

Outages	Results
Blythe(WAPA) – Blythe (SCE) 161kV & Blythe – Eagle Mountain 161kV T/Ls	Stable
Blythe(WAPA) – Blythe (SCE) 161kV & Blythe – Julian Hinds 230kV T/Ls	Stable
Devers – Midpoint 500kV & Coachella – Ramon 230kV T/Ls	Stable
Devers – Midpoint 500kV & Palo Verde – Midpoint 500Kv T/Ls	Stable
Devers – Midpoint 500Kv T/L	Stable
Devers-Valley500Kv T/L	Stable
Devers - San San Bernardino 230kV T/L	Stable
Devers - San San Bernardino 230kV & San Bernardino – Vista 230Kv T/Ls	Stable
San Bernardino – Vista 230kV T/L	Stable
San Bernardino – Etiwanda 230Kv T/L	Stable
Palo Verde – Midpoint 500kV T/L	Stable

3. POST TRANSIENT

The Project does not result in large changes to the voltage stability characteristics of SCE's system. All single contingencies were within the 7% post-transient limit for percent voltage change. All double contingencies were well within the 10% post-transient limit for percent voltage change.

The highest voltage deviation occurred at SCE's Blythe Substation at 6.5% for the cases during natural flow for both with DPV2 and without DPV2.

The case diverged for the N-1 loss of Devers – Valley 500 kV transmission line for both pre and post project with DPV2 scenarios.

4. SHORT CIRCUIT DUTY

Three Phase Short Circuit Duty

Evaluate the need for circuit breaker replacement at 13 bulk power substations.

		Min	PRE CASE		POST CASE		
Bus Name	Bus KV	Rating	X/R	KA	X/R	KA	DELTA KA
LUGO	500	37.8	21.2	42.1	21.1	42.2	0.1
MIRALOMA	500	38.4	24.2	32.6	24.1	32.7	0.1
SERRANO	500	40	23.5	27.8	23.4	27.9	0.1
BARRE	230	45.6	18.5	48.9	18.5	49	0.1
CHINO	230	50	17.3	46.7	17.2	46.8	0.1
DEVERS	230	33	20.8	42.4	20.8	43.3	0.9
ETIWANDA	230	34	20.3	40	20.2	40.1	0.1
MIRAGE	230	25	9.5	15.1	9.5	15.2	0.1
MRLOMA E	230	63	22.8	53.5	22.7	53.6	0.1
MRLOMA W	230	63	20.6	49.3	20.5	49.4	0.1
OLINDA	230	37.7	14	26.9	13.9	27	0.1
SANBRDNO	230	50	21.9	38	21.8	38.1	0.1
SERRANO	230	63	23.5	51.6	23.5	51.7	0.1
VISTA	230	40	19.8	45.4	19.8	45.6	0.2
BLYTHESC	161	31.5	12.4	19.6	12.6	19.8	0.2
DEVERS	115	23	46	24.1	46.3	24.2	0.1
VALLEY A	115	0	53.4	17.6	53.3	17.7	0.1
VALLEY C	115	0	50.6	17.6	50.5	17.7	0.1

Single Line to Ground Short Circuit

Evaluate the need for circuit breaker replacement at 11 bulk power substations.

		Min	PRE CASE		POST CASE		
Bus Name	Bus KV	Rating	X/R	KA	X/R	KA	DELTA KA
Barre	230	45.6	13.1	42.4	13.1	42.5	0.1
Blythe	161	31.5	12.3	19.7	12.3	20	0.3
Chino	230	50	12.8	38.9	12.7	39	0.1
Devers	230	33	16.2	46	16.3	46.8	0.8
Lewis	230	45.6	15.4	39.1	15.4	39.2	0.1
Mira Loma	525	38.4	14.8	30.1	14.8	30.2	0.1
Mira Loma B	230	63	12.7	55	12.7	55.1	0.1
San Bernardino	230	50	19.2	40.3	19.2	40.4	0.1
Serrano	525	40	13.9	25.2	13.9	25.3	0.1

Vincent A	230	63	15.8	49.2	15.8	49.3	0.1
Vista	230	40	13.6	39.7	13.6	39.8	0.1

Evaluate the need for circuit breaker replacement at 11 bulk power substations.

		Min	PRE CASE		POST CASE		
Bus Name	Bus KV	Rating	X/R	KA	X/R	KA	DELTA KA
Barre	230	45.6	13.1	42.4	13.1	42.5	0.1
Blythe	161	31.5	12.3	19.7	12.3	20	0.3
Chino	230	50	12.8	38.9	12.7	39	0.1
Devers	230	33	16.2	46	16.3	46.8	0.8
Lewis	230	45.6	15.4	39.1	15.4	39.2	0.1
Mira Loma	525	38.4	14.8	30.1	14.8	30.2	0.1
Mira Loma B	230	63	12.7	55	12.7	55.1	0.1
San Ber'dino	230	50	19.2	40.3	19.2	40.4	0.1
Serrano	525	40	13.9	25.2	13.9	25.3	0.1
Vincent A	230	63	15.8	49.2	15.8	49.3	0.1
Vista	230	40	13.6	39.7	13.6	39.8	0.1

CONCLUSIONS

The following are recommended upgrades to mitigate the identified overloads:

1. Review feasibility and develop costs associated with upgrades to mitigate base case overloads

Without DPV2

If the DPV2 transmission line project does not materialize, then develop the costs to reconductor the west-of-Devers 230 kV transmission lines; Devers – Vista #1 & #2 and Devers – San Bernardino #1 230 kV transmission lines, and Midpoint – Devers 500 kV transmission lines for both the natural flow and the compensation level increase scenarios. The Project also compounds a base case overload on the Devers – San Bernardino 230 kV transmission line that was triggered by TOT101.

Develop the cost for the series compensation increase. A study has been performed for series compensation increase up to 70% and confirmed that Thyristor Controlled Series Capacitors could be used to mitigate SSR concerns. Although a SSR study was performed with 70% series compensation on DPV1 and DPV2, further studies are required with the proposed new Midpoint 500 kV Substation. The series capacitors require a 4000A rating.

Although upgrading the Midpoint – Devers 500 kV series capacitor to accommodate the additional flow on DPV1 would mitigate thermal overloads, further engineering evaluation during the facility study would need to be performed to determine if there are any clearance limitations for base case conditions.

With DPV2

Develop the cost to upgrade the Devers – Valley 500kV transmission line GIS riser and wavetrap to 4000A

Develop the cost for increasing the series compensation level on DPV1 and DPV2.

2. Review feasibility and develop costs associated with upgrades to mitigate N-1 contingency overloads

Without DPV2

If the DPV2 transmission line project does not materialize, then develop the costs to reconductor the west-of-Devers 230 kV transmission lines; Devers – Vista #1 & #2 230 kV and Devers – San Bernardino #1 & #2. The above base case West-of-Devers 230kV mitigation alternatives would also mitigate the N-1 overloads on the Devers – Vista #1 & #2 and Devers – San Bernardino #1 230kV transmission lines.

The base case overload mitigation plan for the Midpoint – Devers 500kV series capacitors would also mitigate the N-1 overload on this capacitor.

Although upgrading the Midpoint – Devers 500 kV series capacitor to accommodate the additional flow on DPV1 would mitigate thermal overloads, further engineering evaluation during the facility study would need to be performed to determine if there are any clearance limitations for N-1 conditions.

Upgrade the Devers – Valley GIS riser and wavetrap.

With DPV2

Develop the costs to construct a second San Bernardino – Vista 230 kV transmission line, or

Develop the costs to accelerate the second Devers – Valley 500 kV transmission line project as an alternative to mitigate N-1 overloads on the San Bernardino – Vista #2 230 kV transmission line, or evaluate potential future SCE facility upgrades.

Develop the cost to upgrade the series capacitors to accommodate 4 N-1 500 Amps.

Develop the cost to install a third Devers 500/230 kV transformer bank.

Develop the cost to reconductor the Devers – Vista #1 & #2 230 kV lines to 2B-1590

Develop the cost to upgrade the Etiwanda – Vista 230 kV transmission line disconnects, line risers, and wavetrap at the Etiwanda Substation to 3000A.

Develop the cost to upgrade the Mira Loma – Vista 230 kV transmission line disconnects and risers to 3000A.

3. Review feasibility and develop costs associated with upgrades to mitigate N-2 contingency overloads

The base case or N-1 mitigation plans will mitigate the N-2 overloads.

4. Short Circuit Duty

Three Phase Short Circuit Duty

Evaluate the need for circuit breaker replacement at 13 bulk power substations.

		Min	PRE CASE		POST CASE		
Bus Name	Bus KV	Rating	X/R	KA	X/R	KA	DELTA KA
LUGO	500	37.8	21.2	42.1	21.1	42.2	0.1
MIRALOMA	500	38.4	24.2	32.6	24.1	32.7	0.1
SERRANO	500	40	23.5	27.8	23.4	27.9	0.1
BARRE	230	45.6	18.5	48.9	18.5	49	0.1
CHINO	230	50	17.3	46.7	17.2	46.8	0.1
DEVERS	230	33	20.8	42.4	20.8	43.3	0.9
ETIWANDA	230	34	20.3	40	20.2	40.1	0.1
MIRAGE	230	25	9.5	15.1	9.5	15.2	0.1
MRLOMA E	230	63	22.8	53.5	22.7	53.6	0.1
MRLOMA W	230	63	20.6	49.3	20.5	49.4	0.1
OLINDA	230	37.7	14	26.9	13.9	27	0.1
SANBRDNO	230	50	21.9	38	21.8	38.1	0.1
SERRANO	230	63	23.5	51.6	23.5	51.7	0.1
VISTA	230	40	19.8	45.4	19.8	45.6	0.2
BLYTHESC	161	31.5	12.4	19.6	12.6	19.8	0.2
DEVERS	115	23	46	24.1	46.3	24.2	0.1
VALLEY A	115	0	53.4	17.6	53.3	17.7	0.1
VALLEY C	115	0	50.6	17.6	50.5	17.7	0.1

Single Line to Ground Short Circuit

Evaluate the need for circuit breaker replacement at 11 bulk power substations.

		Min	PRE CASE		POST CASE		
Bus Name	Bus KV	Rating	X/R	KA	X/R	KA	DELTA KA
Barre	230	45.6	13.1	42.4	13.1	42.5	0.1
Blythe	161	31.5	12.3	19.7	12.3	20	0.3
Chino	230	50	12.8	38.9	12.7	39	0.1

Devers	230	33	16.2	46	16.3	46.8	0.8
Lewis	230	45.6	15.4	39.1	15.4	39.2	0.1
Mira Loma	525	38.4	14.8	30.1	14.8	30.2	0.1
Mira Loma B	230	63	12.7	55	12.7	55.1	0.1
San Ber'dino	230	50	19.2	40.3	19.2	40.4	0.1
Serrano	525	40	13.9	25.2	13.9	25.3	0.1
Vincent A	230	63	15.8	49.2	15.8	49.3	0.1
Vista	230	40	13.6	39.7	13.6	39.8	0.1

APPENDIX 1

N-1 CONTINGENCIES

line MOENKOPI to ELDORDO 500 ck 1
line HARQUAHA to DEVERS 500 ck 2
line MERCHANT to ELDORDO 230 ck 1
line MERCHANT to ELDORDO 230 ck 2
line MEAD S to ELDORDO 230 ck 1
line MEAD S to ELDORDO 230 ck 2
line BLYTHE to BLYTHESC 161 ck 1
line PARKER to GENE 230 ck 1
line COACHELV to DEVERS 230 ck 1
line COACHELV to DEVERS 230 ck 1
line RAMON to MIRAGE 230 ck 1
line RAMON to MIRAGE 230 ck 1
line BLYTHESC to EAGLEMTN 161 ck 1
line CAMINO to MEAD S 230 ck E
line CAMINO to MEAD S 230 ck W
line CAMINO to GENE 230 ck 1
line CENTER S to MESA CAL 230 ck 1
line ETIWANDA to SANBRDNO 230 ck 1
line ETIWANDA to VSTA 230 ck 1
line ETIWANDA to MIRALOME 230 ck 1
line LUGO to MIRALOMA 500 ck 3
line LUGO to MOHAVE 500 ck 1
line LUGO to SERRANO 500 ck 1
line LUGO to VINCENT 500 ck 1
line LUGO to VINCENT 500 ck 2
line MIRALOMW to VSTA 230 ck 1
line MOHAVE to ELDORDO 500 ck 1
line SANBRDNO to DEVERS 230 ck 1
line SANBRDNO to DEVERS 230 ck 1A
line DEVERS to VALLEYSC 500 ck 1
line DEVERS to SANBRDNO 230 ck 2
line DEVERS to SANBRDNO 230 ck 2A
line DEVERS to MIRAGE 230 ck 1
line DEVERS to VSTA 230 ck 2
line DEVERS to VSTA 230 ck 2A
line DEVERS to EISENHOW 115 ck 1
line VSTA to DEVERS 230 ck 1
line VSTA to DEVERS 230 ck 1A
line EAGLEMTN to IRON MTN 230 ck 1
line IRON MTN to CAMINO 230 ck 1
line MNTVIEW to SANBRDNO 230 ck 1
line MNTVIEW to SANBRDNO 230 ck 2
line PALOVRDE to DEVERS 500 ck 1
line MIDPINTS to DEVERS 500 ck 1 & PALOVRDE to MIDPINTS
line PALOVRDE to MIDPINTS 500 ck 1
line BUCK230 to J.HINDS 230 ck 1
line MIDPINTS to DEVERS 500 ck 1
tran CAMINO 230 to CAMINO 66 ck 1
tran ETIWANDA 230 to ETIWAN7A 66 ck 7
tran ETIWANDA 230 to ETIWANDA 66 ck 5
tran ETIWANDA 230 to ETIWANDA 66 ck 6
tran ETIWANDA 230 to ETIWANDA 66 ck 7
tran SANBRDNO 230 to SANBRDNO 66 ck 1
tran SANBRDNO 230 to SANBRDNO 66 ck 2
tran SANBRDNO 230 to SANBRDNO 66 ck 3
tran SANBRDNO 230 to P120_A 230 ck 1
tran SANBRDNO 230 to P120_B 230 ck 1
tran SANBRDNO 230 to P120_C 230 ck 1
tran VSTA 230 to VSTA 66 ck 1
tran VSTA 230 to VSTA 66 ck 2
tran VSTA 230 to VSTA 66 ck 3
tran VSTA 230 to VSTA 66 ck 4
tran VSTA 230 to VSTA 115 ck 5
tran VSTA 230 to VSTA 115 ck 6
tran EAGLEMTN 230 to EAGLEMTN 161 ck 1
tran EAGLEMTN 230 to EAGLEMTN 66 ck 4
tran GENE 230 to GENE69 N 69 ck 2
tran GENE 230 to GENE69 S 69 ck 1
line MEAD S to ELDORDO 230 ck 1
line MEAD S to ELDORDO 230 ck 2
line BLYTHE to BUCKBLVD 161 ck 1
line BUCK230 to J.HINDS 230 ck 1
line BUCK161 to BUCKPS2 161 ck 1 MIDPINTS 500 to BUCKPS2 161 ck 1
line BLYTHE to BUCK161 161 ck 1
tran BUCKBLVD 161 to BLYENG1 16 ck 1
tran BUCKBLVD 161 to BLYENG2 16 ck 1
tran BUCKBLVD 161 to BLYENG3 16 ck 1
tran BLY500 500 to BUCKBLVD 161 ck 1
tran BUCK161 161 to BLY2CT2 16 ck 1
tran BUCK230 230 to BUCKPS1 161 ck 1&tran BUCK161 161 to BUCKPS1 161 ck 1

line J.HINDS to MIRAGE 230 ck 1
line J.HINDS to EAGLEMTN 230 ck 1
line MIDWAY to VINCENT 500 ck 1
tran BUCK161 161 to BLY2ST1 16 ck 1
tran BUCK161 161 to BLY2CT1 16 ck 1
line IRON MTN 230.00 to CAMINO 230.00

N-2 CONTINGENCIES

"line outage 1"
from DEVERS 230.00 to SANBRDNO 230.00 & from ETIWANDA 230.00 to SANBRDNO 230.00

"line outage 2"
from DEVERS 230.00 to VSTA 230.00 & from ETIWANDA 230.00 to SANBRDNO 230.00

"line outage 3"
from ETIWANDA 230.00 to SANBRDNO 230.00 & from SANBRDNO 230.00 to DEVERS 230.00

"line outage 4"
from ETIWANDA 230.00 to SANBRDNO 230.00 & from VSTA 230.00 to SANBRDNO 230.00

"line outage 5"
from ETIWANDA 230.00 to SANBRDNO 230.00 & from VSTA 230.00 to DEVERS 230.00

"line outage 6"
from VSTA 230.00 to SANBRDNO 230.00 & from VSTA 230.00 to DEVERS 230.00

"line outage 7"
from SANBRDNO 230.00 to DEVERS 230.00 & from VSTA 230.00 to SANBRDNO 230.00

"line outage 8"
from DEVERS 230.00 to SANBRDNO 230.00 & from VSTA 230.00 to SANBRDNO 230.00

"line outage 9"
from DEVERS 230.00 to VSTA 230.00 & from VSTA 230.00 to SANBRDNO 230.00

"line outage 10"
from DEVERS 230.00 to SANBRDNO 230.00 & from DEVERS 230.00 to VSTA 230.00

"line outage 11"

from DEVERS 230.00 to SANBRDNO 230.00 & from SANBRDNO 230.00 to DEVERS 230.00

"line outage 12"
from DEVERS 230.00 to SANBRDNO 230.00 & from VSTA 230.00 to DEVERS 230.00

"line outage 13"
from DEVERS 230.00 to VSTA 230.00 & from SANBRDNO 230.00 to DEVERS 230.00

"line outage 14"
from DEVERS 230.00 to VSTA 230.00 & from VSTA 230.00 to DEVERS 230.00

"line outage 15"
from SANBRDNO 230.00 to DEVERS 230.00 & from VSTA 230.00 to DEVERS 230.00

"line outage 16"
from DEVERS 230.00 to MIRAGE 230.00 & from RAMON 230.00 to MIRAGE 230.00

line_17 "line outage 17"
from DEVERS 230.00 to MIRAGE 230.00 & from COACHELV 230.00 to DEVERS 230.00

"line outage 18"
from DEVERS 230.00 to MIRAGE 230.00 & & from J.HINDS 230.00 to MIRAGE 230.

"line outage 19"
from KRAMER 230.00 to COLWATER 230.00 & & from KRAMER 230.00 to COLWATER 230.

line_20 "line outage 20"
from KRAMER 230.00 to LUGO 230.00 & & from KRAMER 230.00 to LUGO 230.

"line outage 21"
from KRAMER 230.00 to LUGO 230.00 & & from VICTOR 230.00 to LUGO 230.

"line outage 22"
from LUGO 500.00 to VINCENT 500.00 & from LUGO 500.00 to VINCENT 500.00

"line outage 23"
from MIDWAY 500.00 to VINCENT 500.00 & from MIDWAY 500.00 to VINCENT 500.00

"line outage 24"
from DEVERS 500.00 to VALLEYSC 500.00 & from MIDPINTS 500.00 to DEVERS 500.00

"line outage 25"
from DEVERS 500.00 to VALLEYSC 500.00 & from DEVERS 500.00 to DEVERS 230.00

"line outage 26"
from MIDPINTS 500.00 to DEVERS 500.00 & from DEVERS 500.00 to DEVERS 230.00

"line outage 27"
from VSTA 230.00 to DEVERS 230.00 & from COACHELV 230.00 to DEVERS 230.00

"line outage 28"
from DEVERS 230.00 to VSTA 230.00 & from SANBRDNO 230.00 to DEVERS 230.00

"line outage 29"
from LUGO 500.00 to MIRALOMA 500.00 & from LUGO 500.00 to MOHAVE 500.00

"line outage 30"
from ELDORDO 500.00 to LUGO 500.00 & from LUGO 500.00 to MIRALOMA 500.00

"line outage 31"
from LUGO 500.00 to SERRANO 500.00 & from LUGO 500.00 to VINCENT 500.00

"line outage 32"
from LUGO 500.00 to VINCENT 500.00 & from LUGO 500.00 to VICTORVL 500.00

"line outage 33"
from DEVERS 230.00 to SANBRDNO 230.00 & from ETIWANDA 230.00 to SANBRDNO 230.00

"line outage 34"

from DEVERS 230.00 to VSTA 230.00 & from ETIWANDA 230.00 to SANBRDNO 230.00

"line outage 35"
from ETIWANDA 230.00 to SANBRDNO 230.00 & from SANBRDNO 230.00 to DEVERS 230.00

"line outage 36"
from ETIWANDA 230.00 to SANBRDNO 230.00 & from VSTA 230.00 to SANBRDNO 230.00

"line outage 37"
from ETIWANDA 230.00 to SANBRDNO 230.00 & from VSTA 230.00 to DEVERS 230.00

"line outage 38"
from VSTA 230.00 to SANBRDNO 230.00 & from VSTA 230.00 to DEVERS 230.00

"line outage 39"
from SANBRDNO 230.00 to DEVERS 230.00 & from VSTA 230.00 to SANBRDNO 230.00

"line outage 40"
from DEVERS 230.00 to SANBRDNO 230.00 & from VSTA 230.00 to SANBRDNO 230.00

"line outage 41"
from DEVERS 230.00 to VSTA 230.00 & from VSTA 230.00 to SANBRDNO 230.00

"line outage 42"
from DEVERS 230.00 to SANBRDNO 230.00 & from DEVERS 230.00 to VSTA 230.00

"line outage 43"
from DEVERS 230.00 to SANBRDNO 230.00 & from SANBRDNO 230.00 to DEVERS 230.00

"line outage 44"
from DEVERS 230.00 to SANBRDNO 230.00 & from VSTA 230.00 to DEVERS 230.00

"line outage 45"
from DEVERS 230.00 to VSTA 230.00 & from SANBRDNO 230.00 to DEVERS 230.00

"line outage 46"
from DEVERS 230.00 to VSTA 230.00 & from VSTA 230.00 to DEVERS 230.00

"line outage 47"
from SANBRDNO 230.00 to DEVERS 230.00 & from VSTA 230.00 to DEVERS 230.00

"line outage 48"
from DEVERS 230.00 to MIRAGE 230.00 & from COACHELV 230.00 to DEVERS 230.00

l"line outage 49"
from DEVERS 230.00 to MIRAGE 230.00 & from RAMON 230.00 to MIRAGE 230.00

ONE-LINE DIAGRAMS

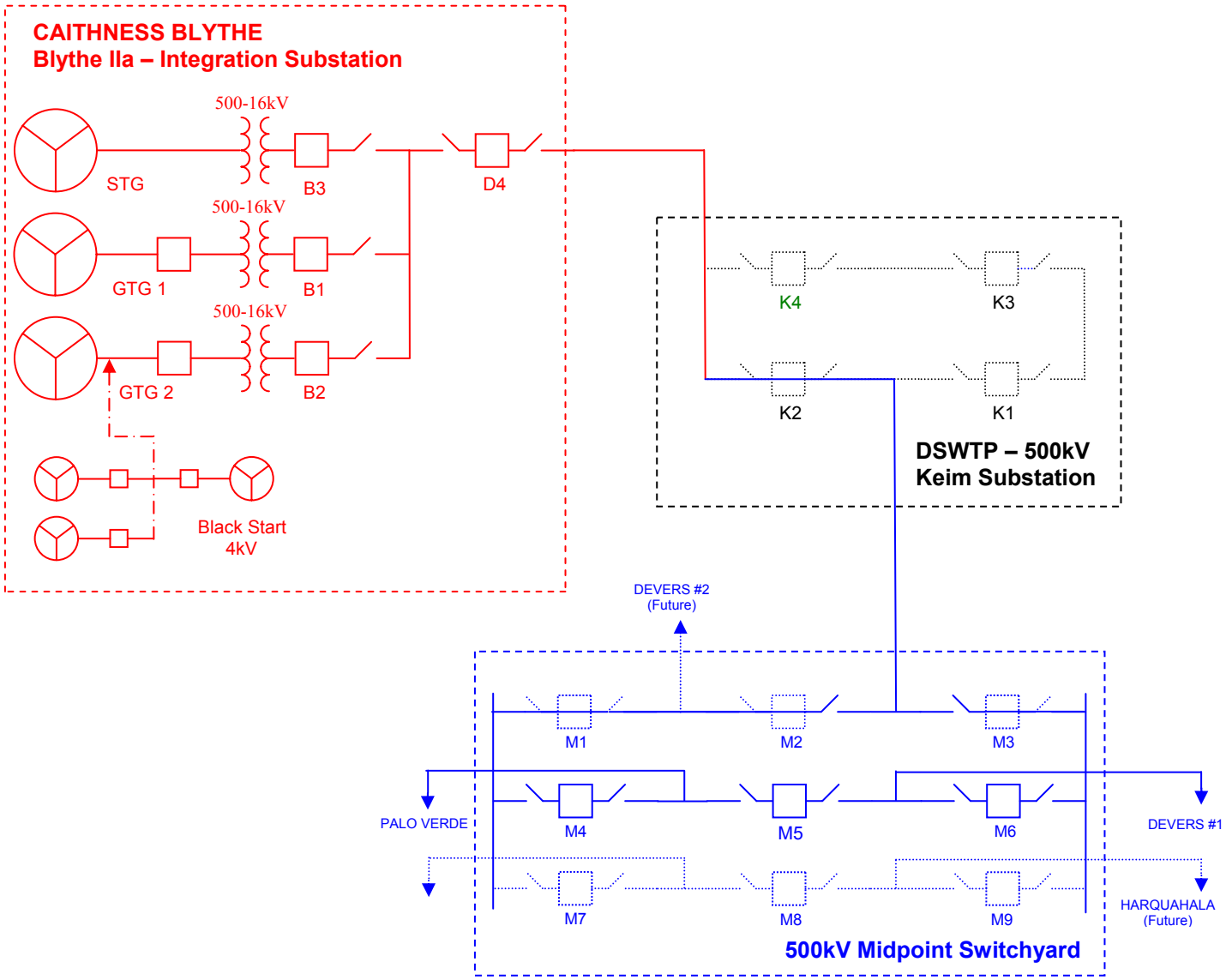

Cadiente Consulting

DATE: 09/16/05

REV: A2

CAITHNESS BLYTHE

DETAILED ONE-LINE

Blythe IIa

DWG NO

001

POWER FLOW TABLE OF RESULTS

BYTHE II GENERATION SYSTEM IMPACT STUDIES
WITH DPV2
BASE CASE & N-1

From Bus Name	To Bus Name	TkV	ID	Normal/Emergency Amp Rating	bep2preprojectwdpv2new1b.flo Loading % (Case 2)	bep2postprojectwdpv2newnat1b.flo Loading % (Case 5)	bep2postprojectwdpv2newcomp1b.flo Loading % (Case 6)	Contingency Description
DEVERS	VALLEYSC	500	1	3000/3000	104.30%	111.30%	115.30%	Base system (n-0)
DEVERS	DEVERS	500/230	1	1120/1230 MVA	108.00%	116.00%	119.00%	line DEVERS to VALLEYSC 500 ck 1
DEVERS	DEVERS	500/230	2	1120/1230 MVA	108.00%	116.00%	119.00%	line DEVERS to VALLEYSC 500 ck 1
DEVERS	VALLEYSC	500	1	3000/3000	109.70%	117.00%	121.00%	line DEVERS to VSTA 230 ck 2
DEVERS	VALLEYSC	500	1	3000/3000	109.70%	117.00%	121.00%	line VSTA to DEVERS 230 ck 1
DEVERS	VALLEYSC	500	1	3000/3000	108.20%	115.30%	119.30%	line SAN BERNARDINO - VISTA 230 ck 1
DEVERS	VALLEYSC	500	1	3000/3000	107.80%	115.10%	119.10%	line SANBRDNO to DEVERS 230 ck 1
DEVERS	VALLEYSC	500	1	3000/3000	107.80%	115.10%	119.10%	line DEVERS to SANBRDNO 230 ck 2
DEVERS	VALLEYSC	500	1	3000/3000	106.90%	114.10%	118.00%	line ETIWANDA to SANBRDNO 230 ck 1
DEVERS	VALLEYSC	500	1	3000/3000	109.00%	116.20%	120.50%	line MOENKOPI to ELDORDO 500 ck 1
DEVERS	VALLEYSC	500	1	3000/3000	102.90%	109.80%	113.80%	tran BUCK161 161 to BLY2CT2 16 ck 1
DEVERS	VALLEYSC	500	1	3000/3000	102.90%	109.80%	113.80%	tran BUCK161 161 to BLY2CT1 16 ck 1
DEVERS	VALLEYSC	500	1	3000/3000	102.80%	109.80%	113.70%	tran BUCK161 161 to BLY2ST1 16 ck 1
DEVERS	VALLEYSC	500	1	3000/3000	91.20%	99.80%	103.80%	line PALOVRDE to MIDPINTS 500 ck 1
DEVERS	VSTA	230	2	2480/2850	110.90%	116.70%	118.30%	line DEVERS to VALLEYSC 500 ck 1
ETIWANDA	VSTA	230	1	2000/2000	98.00%	103.90%	105.20%	line DEVERS to VALLEYSC 500 ck 1
MIRALOMW	VSTA	230	1	2300/2650	107.20%	113.00%	114.40%	line DEVERS to VALLEYSC 500 ck 1
VSTA	DEVERS	230	1	2480/2850	110.90%	116.70%	118.30%	line DEVERS to VALLEYSC 500 ck 1
VSTA	SANBRDNO	230	2	2480/2850	113.41%	117.94%	123.00%	line ETIWANDA to SANBRDNO 230 ck 1

TABLE 4

BYTHE II GENERATION SYSTEM IMPACT STUDIES
WITH DPV2
N-2

From Bus Name	To Bus Name	TkV	ID	Amp/MVA Rating	bep2preprojectwdpv2newn2.flo	bep2postprojectwdpv2newnatn2.flo	bep2postprojectwdpv2newcompn2.flo	Contingency Description
DEVERS	VALLEYSC	500	1	3000/3000	1.222	1.303	1.342	line outage 36
DEVERS	VALLEYSC	500	1	3000/3000	1.222	1.303	1.342	line outage 4
DEVERS	VALLEYSC	500	1	3000/3000	1.153	1.231	1.271	line outage 10
DEVERS	VALLEYSC	500	1	3000/3000	1.153	1.231	1.271	line outage 12
DEVERS	VALLEYSC	500	1	3000/3000	1.153	1.231	1.271	line outage 13
DEVERS	VALLEYSC	500	1	3000/3000	1.153	1.231	1.271	line outage 15
DEVERS	VALLEYSC	500	1	3000/3000	1.153	1.231	1.271	line outage 28
DEVERS	VALLEYSC	500	1	3000/3000	1.185	1.264		line outage 14
DEVERS	VALLEYSC	500	1	3000/3000	1.145	1.223	1.263	line outage 11
DEVERS	VALLEYSC	500	1	3000/3000	1.126	1.202	1.241	line outage 2
DEVERS	VALLEYSC	500	1	3000/3000	1.126	1.202	1.241	line outage 5
DEVERS	VALLEYSC	500	1	3000/3000	1.165	1.241		line outage 6
DEVERS	VALLEYSC	500	1	3000/3000	1.165	1.241		line outage 9
DEVERS	VALLEYSC	500	1	3000/3000	1.097	1.17	1.21	line outage 1
DEVERS	VALLEYSC	500	1	3000/3000	1.097	1.17	1.21	line outage 3
DEVERS	VALLEYSC	500	1	3000/3000	1.097	1.17	1.21	line outage 7
DEVERS	VALLEYSC	500	1	3000/3000	1.097	1.17	1.21	line outage 8
DEVERS	VALLEYSC	500	1	3000/3000	1.095	1.169	1.209	line outage 27
DEVERS	VALLEYSC	500	1	3000/3000	1.082	1.153	1.193	line outage 39
DEVERS	VALLEYSC	500	1	3000/3000	1.069	1.141	1.18	line outage 33
DEVERS	VALLEYSC	500	1	3000/3000	1.069	1.141	1.18	line outage 34
DEVERS	VALLEYSC	500	1	3000/3000	1.069	1.141	1.18	line outage 35
DEVERS	VALLEYSC	500	1	3000/3000	1.069	1.141	1.18	line outage 37
DEVERS	VALLEYSC	500	1	3000/3000	1.032	1.102		line outage 48
DEVERS	VSTA	230	2	2480/3350	1.07	1.131	1.157	line outage 36
DEVERS	VSTA	230	2	2480/3350	1.07	1.131	1.157	line outage 4
DEVERS	VSTA	230	2	2480/3350	1.046	1.103		line outage 6
DEVERS	VSTA	230	2	2480/3350	0.95	1.011	1.039	line outage 12
DEVERS	VSTA	230	2	2480/3350	0.95	1.011	1.039	line outage 15
DEVERS	VSTA	230	2	2480/3350	0.913	0.974	1.001	line outage 11
ETIWANDA	SANBRDNO	230	1	1799/2000	1.846	1.928		line outage 6
ETIWANDA	SANBRDNO	230	1	1799/2000	1.846	1.928		line outage 9
ETIWANDA	SANBRDNO	230	1	1799/2000	1.6	1.666	1.702	line outage 39
ETIWANDA	SANBRDNO	230	1	1799/2000	1.411	1.457	1.482	line outage 7
ETIWANDA	SANBRDNO	230	1	1799/2000	1.411	1.457	1.482	line outage 8
ETIWANDA	SANBRDNO	230	1	1799/2000	0.957	1.007		line outage 14

TABLE 4

BYTHE II GENERATION SYSTEM IMPACT STUDIES
WITH DPV2
N-2

From Bus Name	To Bus Name	TkV	ID	Amp/MVA Rating	bep2preprojectwdpv2newn2.flo	bep2postprojectwdpv2newnatn2.flo	bep2postprojectwdpv2newcompn2.flo	Contingency Description
ETIWANDA	VSTA	230	1	2000/2000	0.924	0.985	1.009	line outage 33
ETIWANDA	VSTA	230	1	2000/2000	0.924	0.985	1.009	line outage 34
ETIWANDA	VSTA	230	1	2000/2000	0.924	0.985	1.009	line outage 35
ETIWANDA	VSTA	230	1	2000/2000	0.924	0.985	1.009	line outage 37
HARQUAHA	DEVERS	500	1	3645/2700	1.088	1.169	1.276	line outage 26
MIDPINTS	DEVERS	500	1	3645/2700	0.859	0.999	1.06	line outage 48
MIDPINTS	DEVERS	500	1	3645/2700			1.018	line outage 33
MIDPINTS	DEVERS	500	1	3645/2700			1.018	line outage 34
MIDPINTS	DEVERS	500	1	3645/2700			1.018	line outage 35
MIDPINTS	DEVERS	500	1	3645/2700			1.018	line outage 37
MIDPINTS	DEVERS	500	1	3645/2700	0.814	0.954	1.012	line outage 39
MIDPINTS	DEVERS	500	1	3645/2700	0.812	0.951	1.009	line outage 27
MIDPINTS	DEVERS	500	1	2700	0.807	0.946	1.004	line outage 1
MIDPINTS	DEVERS	500	1	2700	0.807	0.946	1.004	line outage 3
MIDPINTS	DEVERS	500	1	2700	0.807	0.946	1.004	line outage 7
MIDPINTS	DEVERS	500	1	2700	0.807	0.946	1.004	line outage 8
MOENKOPI	ELDORDO	500	1	1899.9	1.015	1.065	1.018	line outage 26
VSTA	SANBRDNO	230	2	2480.1	1.315	1.371	1.400	line outage 2
VSTA	SANBRDNO	230	2	3645/2700	1.009	1.053	1.075	line outage 5

TABLE 1B

BYTHE II GENERATION SYSTEM IMPACT STUDIES
WITHOUT DPV2
BASE CASE & N-1

From Bus Name	To Bus Name	TkV	ID	Normal/Emergency Amp Rating	bep2preprojectwodpv2newn1.flo Loading Percentages on Normal Ratings Case 1	bep2postprojectnatwodpv2n1.flo Loading Percentages on Normal Ratings Case 3	bep2postprojectcompwodpv2n1.flo Loading Percentages on Normal Ratings Case 4	Contingency Description
DEVERS	VSTA	230	2	1240	93.40%	99.70%	103.70%	Base system (n-0)
MIDPINTS	DEVERS	500	1	2700	99.90%	113.00%	122.20%	Base system (n-0)
SANBRDNO	DEVERS	230	1	795	110.20%	118.80%	124.10%	Base system (n-0)
VSTA	DEVERS	230	1	1150	99.60%	106.40%	110.60%	Base system (n-0)
DEVERS	SANBRDNO	230	2	1150/1150	97.70%	105.30%	109.90%	line SANBRDNO to DEVERS 230 ck 1
DEVERS	SANBRDNO	230	2	1150/1150	95.50%	102.80%	107.10%	line DEVERS to VSTA 230 ck 2
DEVERS	SANBRDNO	230	2	1150/1150	95.20%	102.50%	106.80%	line VSTA to DEVERS 230 ck 1
DEVERS	VALLEYSC	500	1	3000/3000	90.50%	97.80%	102.40%	line DEVERS to VSTA 230 ck 2
DEVERS	VALLEYSC	500	1	3000/3000	90.50%	97.70%	102.40%	line VSTA to DEVERS 230 ck 1
DEVERS	VALLEYSC	500	1	3000/3000	89.50%	96.60%	101.40%	line MOENKOPI to ELDORDO 500 ck 1
DEVERS	VALLEYSC	500	1	3000/3000	89.10%	96.20%	100.90%	line DEVERS to SANBRDNO 230 ck 2
DEVERS	VALLEYSC	500	1	3000/3000	89.00%	96.10%	100.80%	line SANBRDNO to DEVERS 230 ck 1
DEVERS	VALLEYSC	500	1	3000/3000	89.10%	96.10%	100.70%	line SAN BERNARDINO - VISTA 230 ck 1
DEVERS	VSTA	230	2	1240/1240	112.00%	119.60%	124.10%	line VSTA to DEVERS 230 ck 1
DEVERS	VSTA	230	2	1240/1240	112.30%	119.40%	123.60%	line SAN BERNARDINO - VISTA 230 ck 1
DEVERS	VSTA	230	2	1240/1240	105.70%	113.00%	117.40%	line DEVERS to SANBRDNO 230 ck 2
DEVERS	VSTA	230	2	1240/1240	105.10%	112.50%	116.80%	line SANBRDNO to DEVERS 230 ck 1
DEVERS	VSTA	230	2	1240/1240	97.10%	103.80%	107.70%	line MOENKOPI to ELDORDO 500 ck 1
DEVERS	VSTA	230	2	1240/1240	94.40%	100.80%	104.70%	line ETIWANDA to SANBRDNO 230 ck 1
DEVERS	VSTA	230	2	1240/1240	91.70%	98.00%	101.80%	tran BUCK161 161 to BLY2CT2 16 ck 1
DEVERS	VSTA	230	2	1240/1240	91.70%	98.00%	101.80%	tran BUCK161 161 to BLY2CT1 16 ck 1
DEVERS	VSTA	230	2	1240/1240	91.60%	97.90%	101.70%	tran BUCK161 161 to BLY2ST1 16 ck 1
MIDPINTS	DEVERS	500	1	2700/3645	107.40%	120.80%	130.20%	line MOENKOPI to ELDORDO 500 ck 1
MIDPINTS	DEVERS	500	1	2700/3645			120.70%	line ETIWANDA to SANBRDNO 230 ck 1
MIDPINTS	DEVERS	500	1	2700/3645	98.30%	111.40%	120.50%	tran BUCK161 161 to BLY2CT2 16 ck 1
MIDPINTS	DEVERS	500	1	2700/3645	98.30%	111.40%	120.50%	tran BUCK161 161 to BLY2CT1 16 ck 1
MIDPINTS	DEVERS	500	1	2700/3645	98.20%	111.30%	120.40%	tran BUCK161 161 to BLY2ST1 16 ck 1
MIDPINTS	DEVERS	500	1	2700/3645	97.80%	110.80%	119.70%	line SAN BERNARDINO - VISTA 230 ck 1
MIDPINTS	DEVERS	500	1	2700/3645	97.80%	110.70%	119.60%	line SANBRDNO to DEVERS 230 ck 1
MIDPINTS	DEVERS	500	1	2700/3645	97.80%	110.60%	119.50%	line DEVERS to SANBRDNO 230 ck 2
MIDPINTS	DEVERS	500	1	2700/3645	96.90%	109.80%	118.50%	line VSTA to DEVERS 230 ck 1
MIDPINTS	DEVERS	500	1	2700/3645	96.90%	109.70%	118.40%	line DEVERS to VSTA 230 ck 2

TABLE 1B

BYTHE II GENERATION SYSTEM IMPACT STUDIES
WITHOUT DPV2
BASE CASE & N-1

From Bus Name	To Bus Name	TkV	ID	Normal/Emergency Amp Rating	bep2preprojectwodpv2newn1.flo Loading Percentages on Normal Ratings Case 1	bep2postprojectnatwodpv2n1.flo Loading Percentages on Normal Ratings Case 3	bep2postprojectcompwodpv2n1.flo Loading Percentages on Normal Ratings Case 4	Contingency Description
SANBRDNO	DEVERS	230	1	795/795	137.90%	148.70%	155.10%	line DEVERS to SANBRDNO 230 ck 2
SANBRDNO	DEVERS	230	1	795/795	133.50%	143.80%	149.80%	line DEVERS to VSTA 230 ck 2
SANBRDNO	DEVERS	230	1	795/795	133.20%	143.40%	149.40%	line VSTA to DEVERS 230 ck 1
SANBRDNO	DEVERS	230	1	795/795	115.10%	124.20%	129.60%	line MOENKOPI to ELDORDO 500 ck 1
SANBRDNO	DEVERS	230	1	795/795	108.00%	116.50%	121.60%	tran BUCK161 161 to BLY2CT2 16 ck 1
SANBRDNO	DEVERS	230	1	795/795	108.00%	116.50%	121.60%	tran BUCK161 161 to BLY2CT1 16 ck 1
SANBRDNO	DEVERS	230	1	795/795	107.90%	116.40%	121.50%	tran BUCK161 161 to BLY2ST1 16 ck 1
SANBRDNO	DEVERS	230	1	795/795	94.90%	102.80%	107.50%	line ETIWANDA to SANBRDNO 230 ck 1
VSTA	DEVERS	230	1	1150/1150	119.70%	127.90%	132.70%	line DEVERS to VSTA 230 ck 2
VSTA	DEVERS	230	1	1150/1150	119.80%	127.40%	131.90%	line SAN BERNARDINO - VISTA 230 ck 1
VSTA	DEVERS	230	1	1150/1150	112.70%	120.60%	125.30%	line DEVERS to SANBRDNO 230 ck 2
VSTA	DEVERS	230	1	1150/1150	112.20%	120.00%	124.60%	line SANBRDNO to DEVERS 230 ck 1
VSTA	DEVERS	230	1	1150/1150	103.50%	110.70%	114.90%	line MOENKOPI to ELDORDO 500 ck 1
VSTA	DEVERS	230	1	1150/1150	100.70%	107.50%	111.60%	line ETIWANDA to SANBRDNO 230 ck 1
VSTA	DEVERS	230	1	1150/1150	97.80%	104.60%	108.60%	tran BUCK161 161 to BLY2CT2 16 ck 1
VSTA	DEVERS	230	1	1150/1150	97.80%	104.60%	108.60%	tran BUCK161 161 to BLY2CT1 16 ck 1
VSTA	DEVERS	230	1	1150/1150	97.70%	104.50%	108.50%	tran BUCK161 161 to BLY2ST1 16 ck 1

TABLE 3

BYTHE II GENERATION SYSTEM IMPACT STUDIES
WITHOUT DPV2
N-2

From Bus Name	To Bus Name	TkV	ID	Amp/MVA Rating	bep2preprojectwodpv2newn2.flo	bep2postprojectnatwodpv2n2.flo	bep2postprojectcompwodpv2n2.flo	Contingency Description
DEVERS	SANBRDNO	230	2	1149.7	121.60%	131.10%	136.60%	line outage 13
DEVERS	VALLEYSC	500	1	2999.9	103.80%	112.50%	116.60%	line outage 36
DEVERS	VSTA	230	2	1240	152.20%	162.10%	166.40%	line outage 36
MIDPINTS	DEVERS	500	1	2700	104.30%	117.40%	126.70%	line outage 48
SANBRDNO	DEVERS	230	1	795.7	171.70%	185.10%	193.00%	line outage 10
VSTA	DEVERS	230	1	1149.7	162.30%	172.90%	177.50%	line outage 36

POWER FLOW PLOT FILES

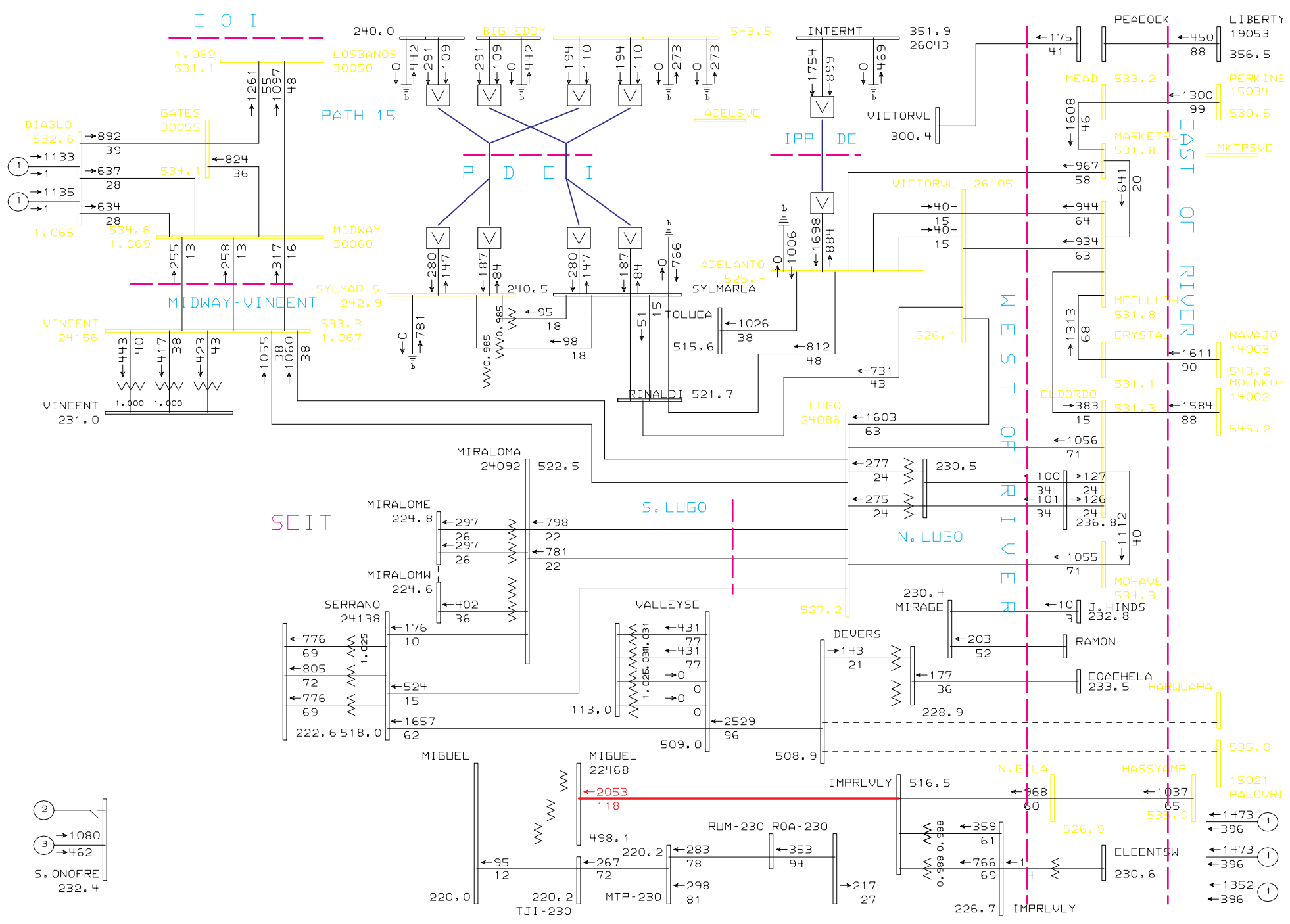

General Electric International, Inc. PSLF Program MW/Pct Mon Dec 19 18:05:25 2005

GENERAL ELECTRIC COMPANY	bep2postprojectcompwodpv2.sav BEPII SERIES COMPENSATION POST-PROJECT	DPV2	SCAL09a.drw bep2postprojectcompwodpv2.sav Rating = 1

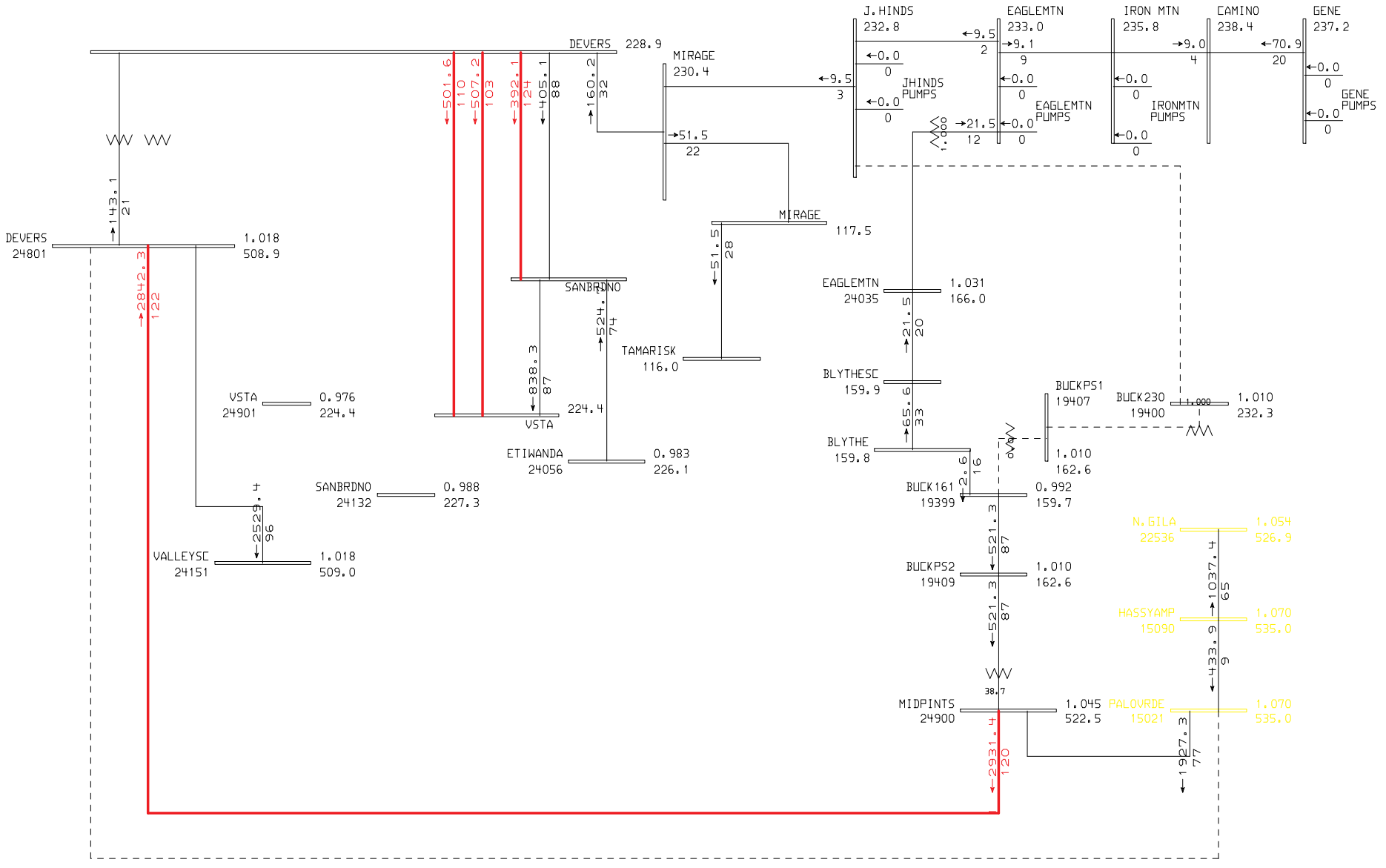

General Electric International, Inc. PSLF Program MW/Pct Mon Dec 19 18:05:36 2005

GENERAL ELECTRIC COMPANY	bep2postprojectcompwodpv2.sav BEPII SERIES COMPENSATION POST-PROJECT	DPV2	jhindbucklight2.drw bep2postprojectcompwodpv2.sav Rating = 1

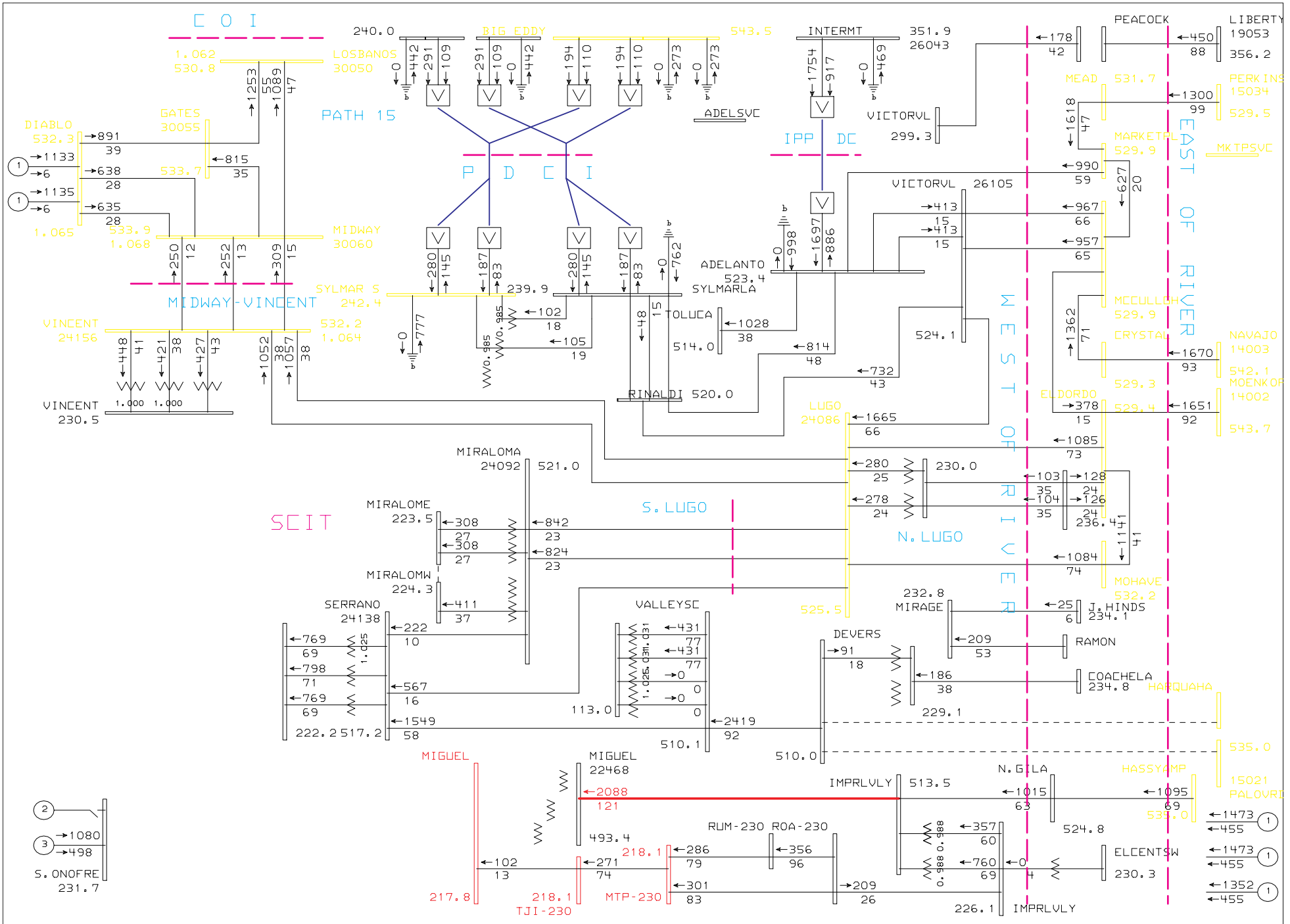

General Electric International, Inc. PSLF Program MW/Pct Mon Dec 19 18:06:18 2005

GENERAL ELECTRIC COMPANY	bep2postprojectnatwodpv2.sav BEPII SERIES COMPENSATION POST-PROJECT	DPV2	SCAL09a.drw bep2postprojectnatwodpv2.sav Rating = 1

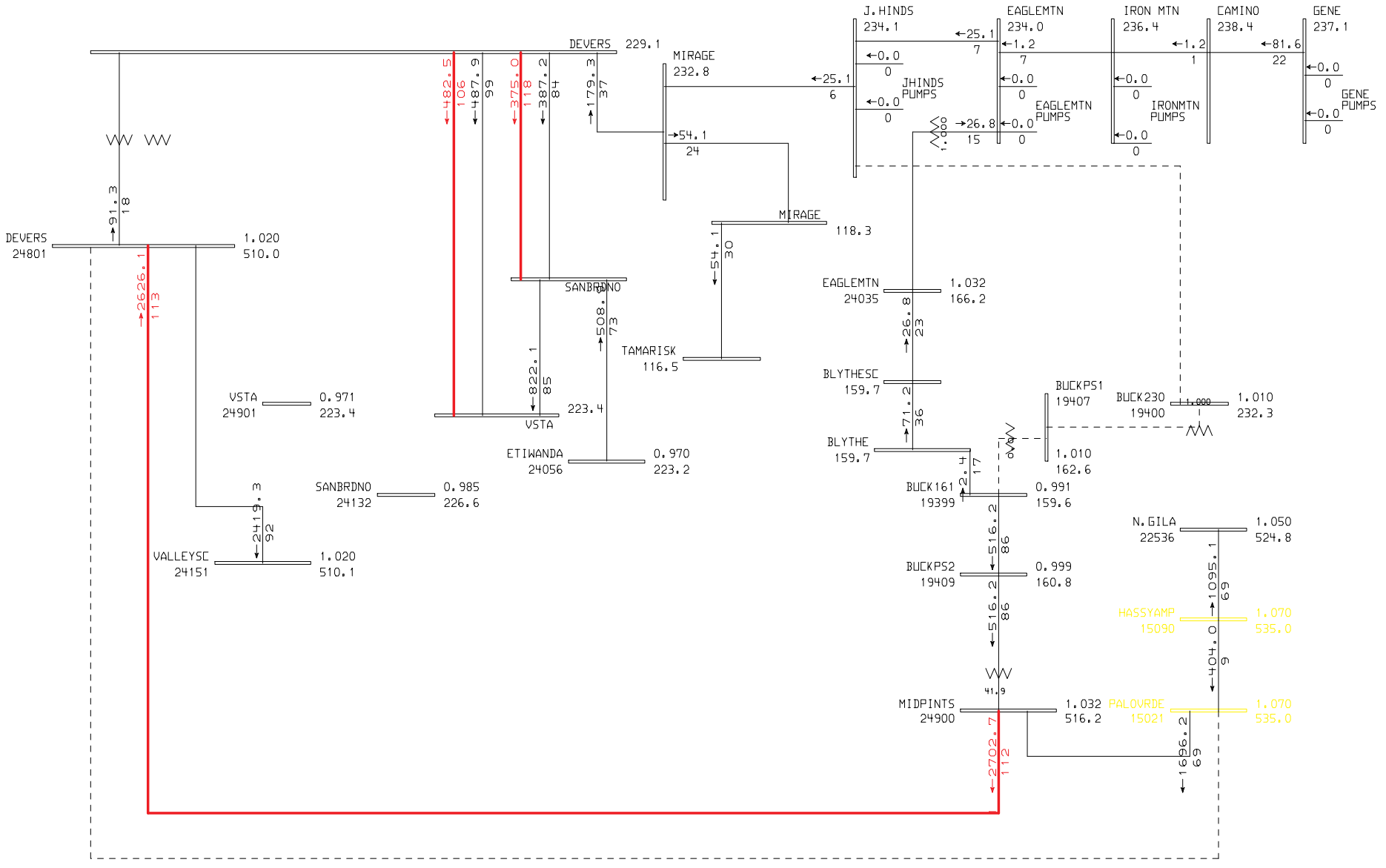

General Electric International, Inc. PSLF Program MW/Pct Mon Dec 19 18:06:29 2005

GENERAL ELECTRIC COMPANY	bep2postprojectnatwodpv2.sav BEPII SERIES COMPENSATION POST-PROJECT	DPV2	jhindbucklight2.drw bep2postprojectnatwodpv2.sav Rating = 1

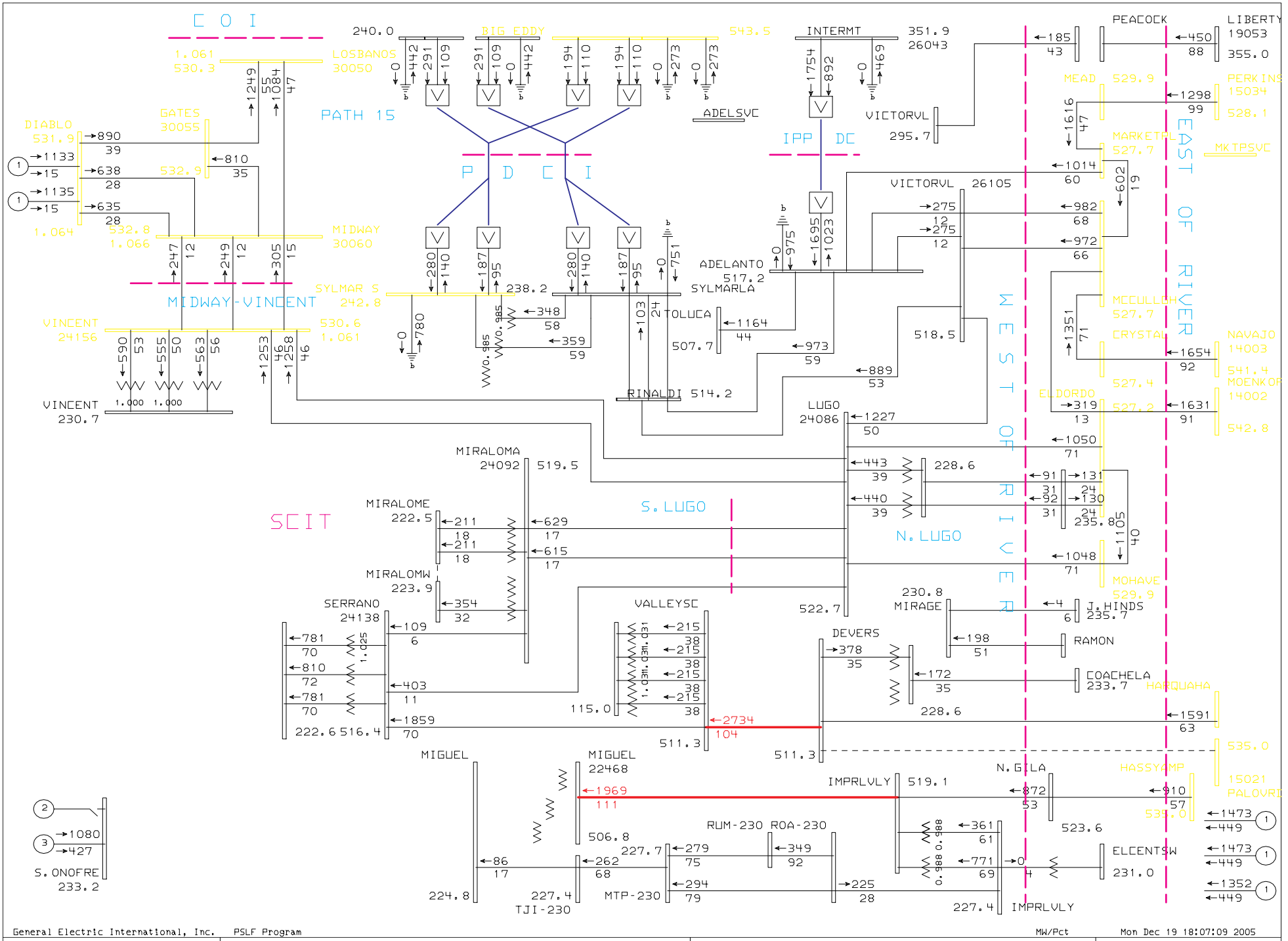

General Electric International, Inc. PSLF Program MW/Pct Mon Dec 19 18:07:09 2005

GENERAL ELECTRIC COMPANY

bep2postprojectwdpv2new.sav
BEPII SERIES COMPENSATION 520 MW INCREASE
WITH DPV2 - POST PROJECT

SCAL09a.drw
bep2postprojectwdpv2new.sav
Rating = 1

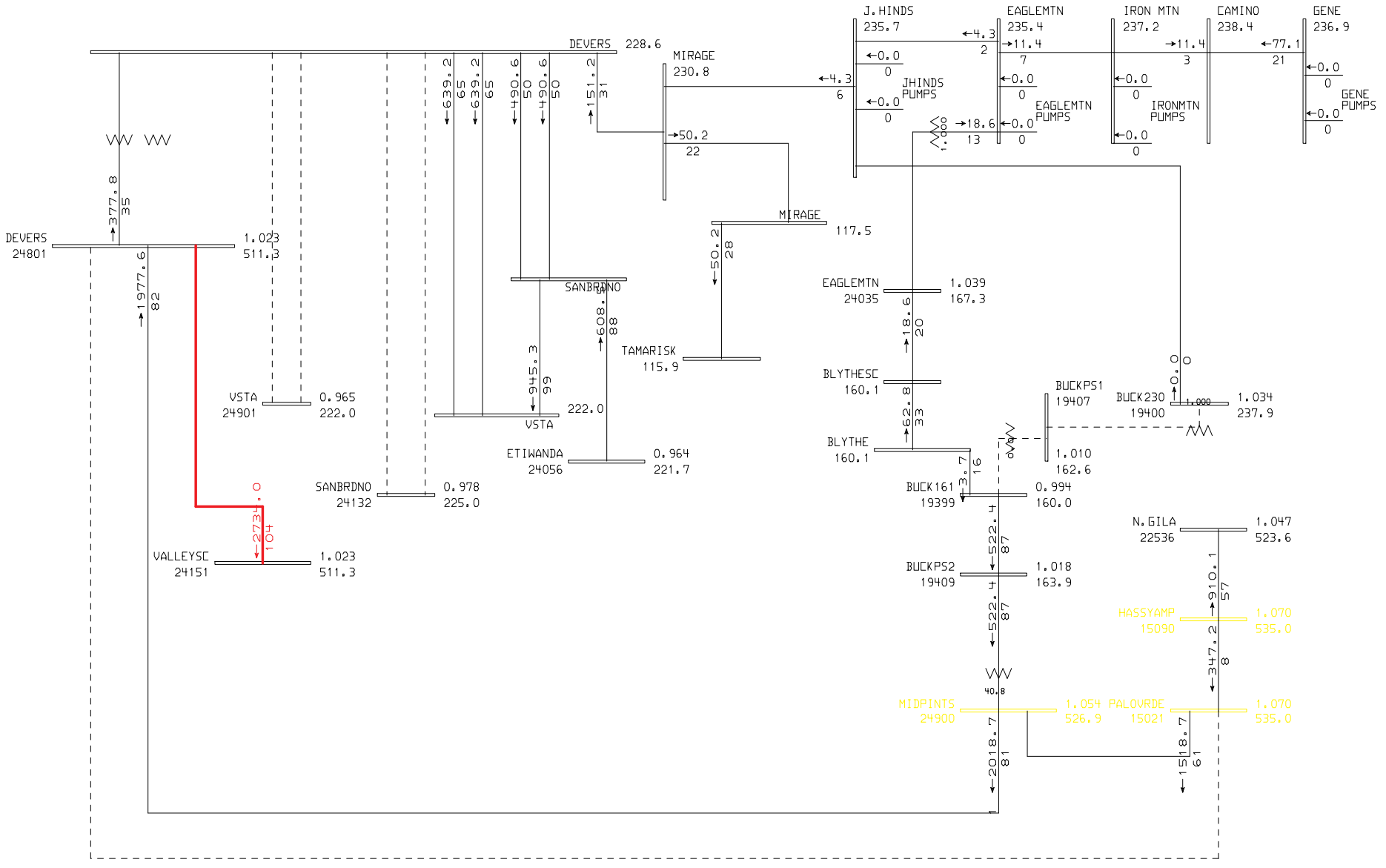

General Electric International, Inc. PSLF Program MW/Pct Mon Dec 19 18:07:20 2005

GENERAL ELECTRIC COMPANY

bep2postprojectwdpv2new.sav
BEPII SERIES COMPENSATION 520 MW INCREASE
WITH DPV2 - POST PROJECT

jhindbucklight2.drw
bep2postprojectwdpv2new.sav
Rating = 1

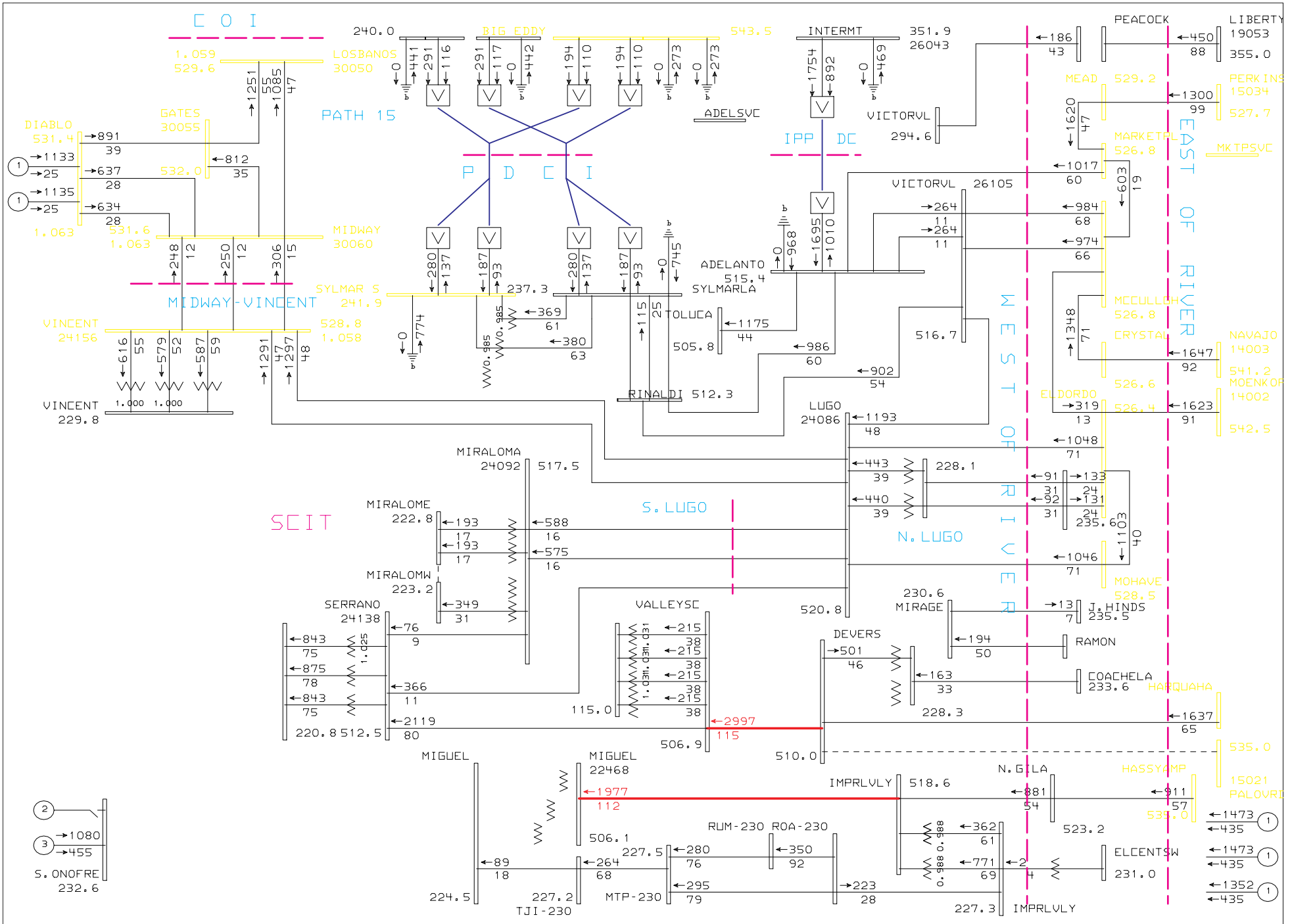

General Electric International, Inc. PSLF Program MW/Pct Mon Dec 19 18:08:01 2005

GENERAL ELECTRIC COMPANY

bep2postprojectwdpv2newcomp.sav
BEPII SERIES COMPENSATION 520 MW INCREASE
WITH DPV2 - POST PROJECT

SCAL09a.drw
bep2postprojectwdpv2newcomp.sa
Rating = 1

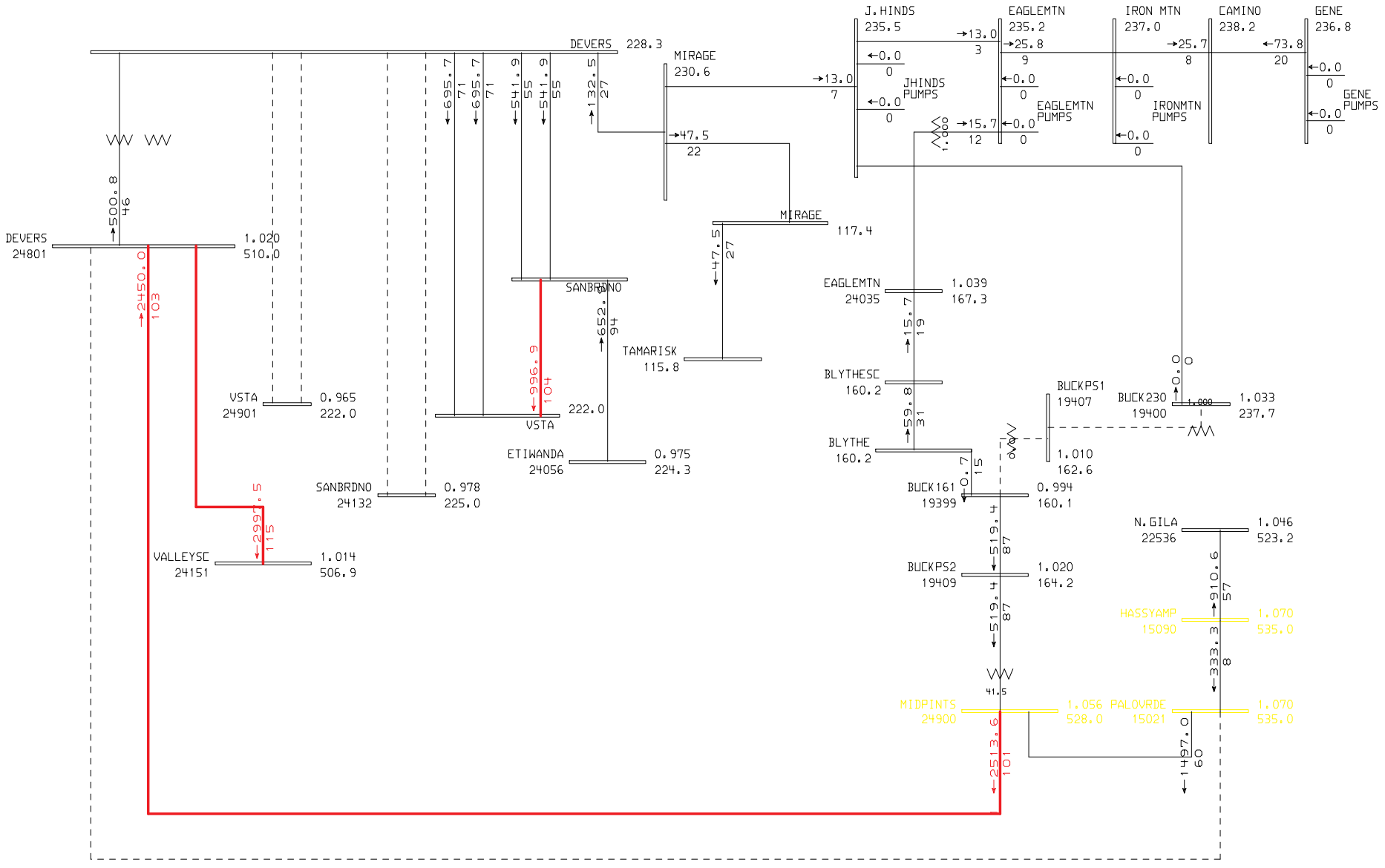

General Electric International, Inc. PSLF Program MW/Pct Mon Dec 19 18:08:11 2005

GENERAL ELECTRIC COMPANY

bep2postprojectwdpv2newcomp.sav
BEPII SERIES COMPENSATION 520 MW INCREASE
WITH DPV2 - POST PROJECT

jhindbucklight2.drw
bep2postprojectwdpv2newcomp.sa
Rating = 1

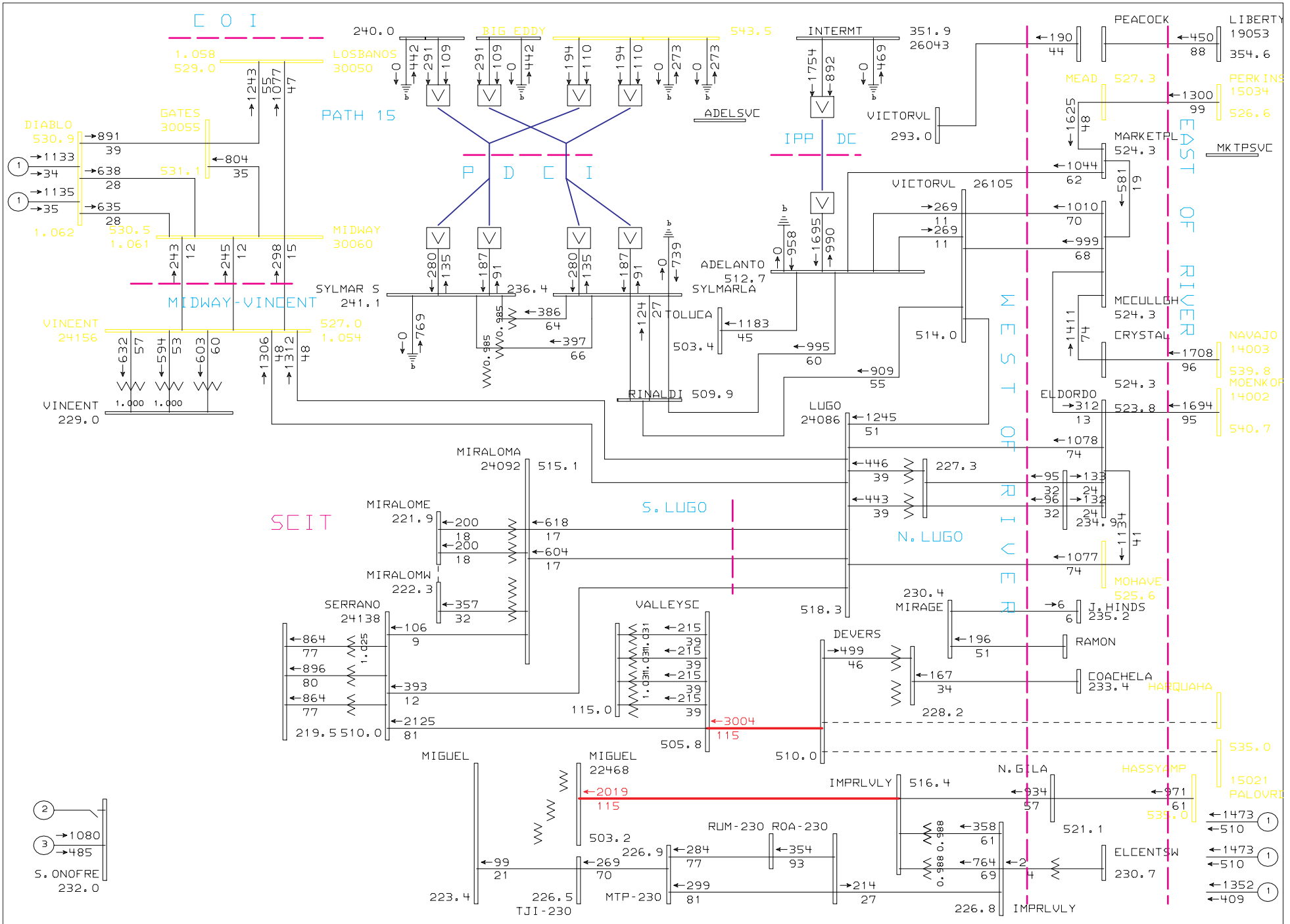

General Electric International, Inc. PSLF Program MW/Pct Mon Dec 19 18:08:50 2005

GENERAL ELECTRIC COMPANY

bep2postprojectwdpv2newcompr.sav
BEPII SERIES COMPENSATION 520 MW INCREASE
WITH DPV2 - POST PROJECT

SCAL09a.drw
bep2postprojectwdpv2newcompr.s
Rating = 1

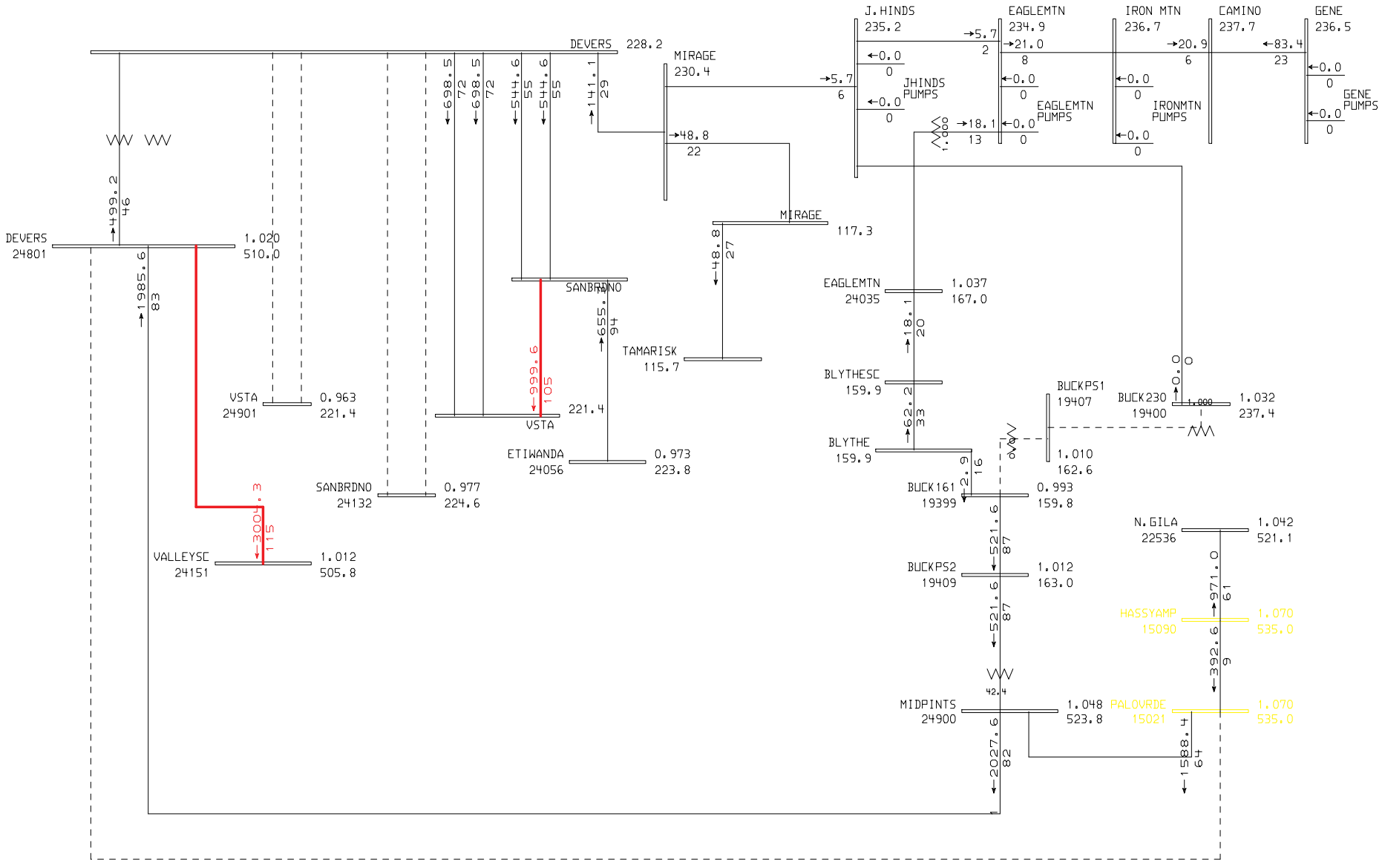

General Electric International, Inc. PSLF Program MW/Pct Mon Dec 19 18:09:00 2005

GENERAL ELECTRIC COMPANY

bep2postprojectwdpv2newcompr.sav
BEPII SERIES COMPENSATION 520 MW INCREASE
WITH DPV2 - POST PROJECT

jhindbucklight2.drw
bep2postprojectwdpv2newcompr.s
Rating = 1

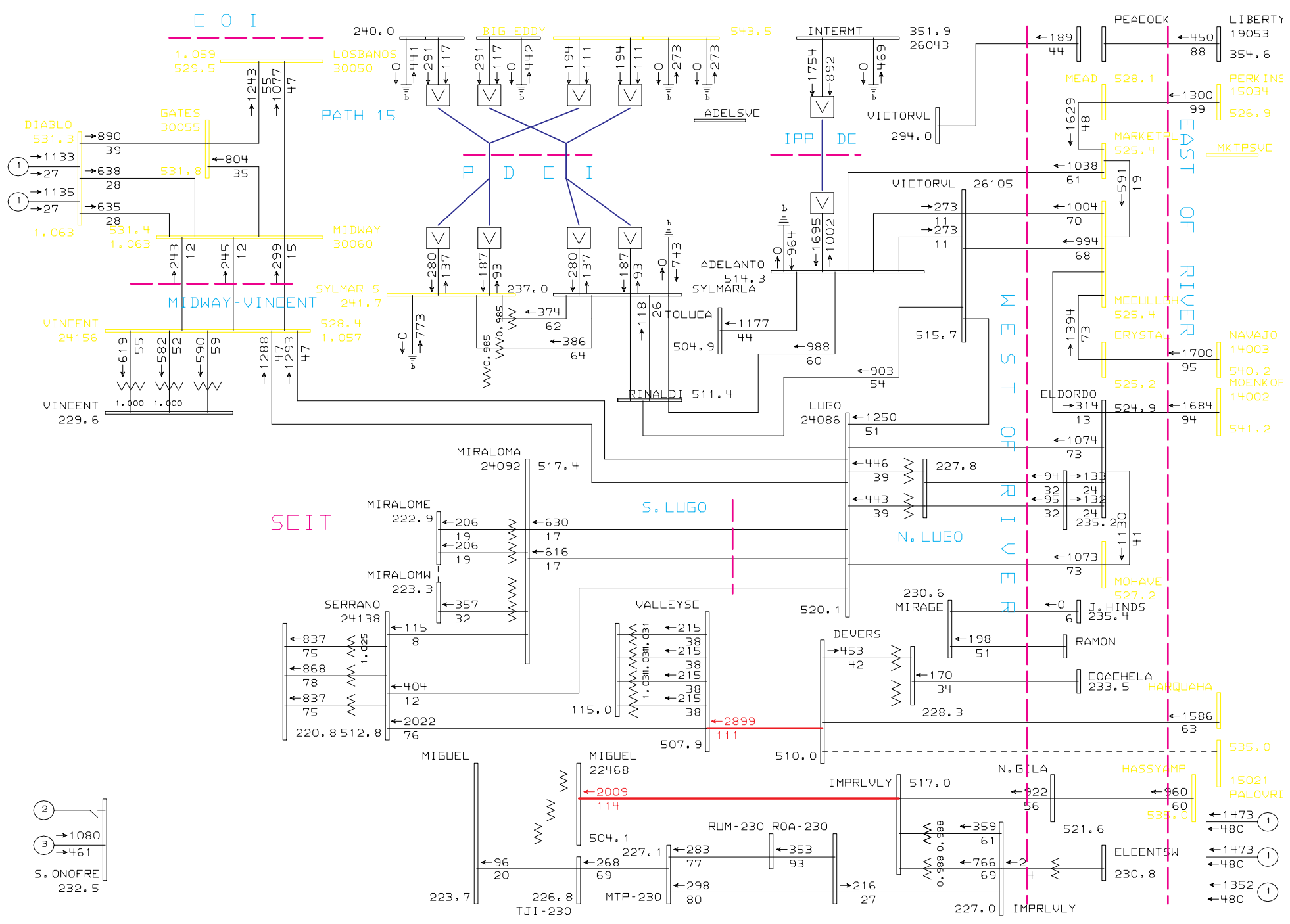

General Electric International, Inc. PSLF Program MW/Pct Mon Dec 19 18:09:40 2005

GENERAL ELECTRIC COMPANY

bep2postprojectwdpv2newnat.sav
BEPII SERIES COMPENSATION 520 MW INCREASE
WITH DPV2 - POST PROJECT

SCAL09a.drw
bep2postprojectwdpv2newnat.sav
Rating = 1

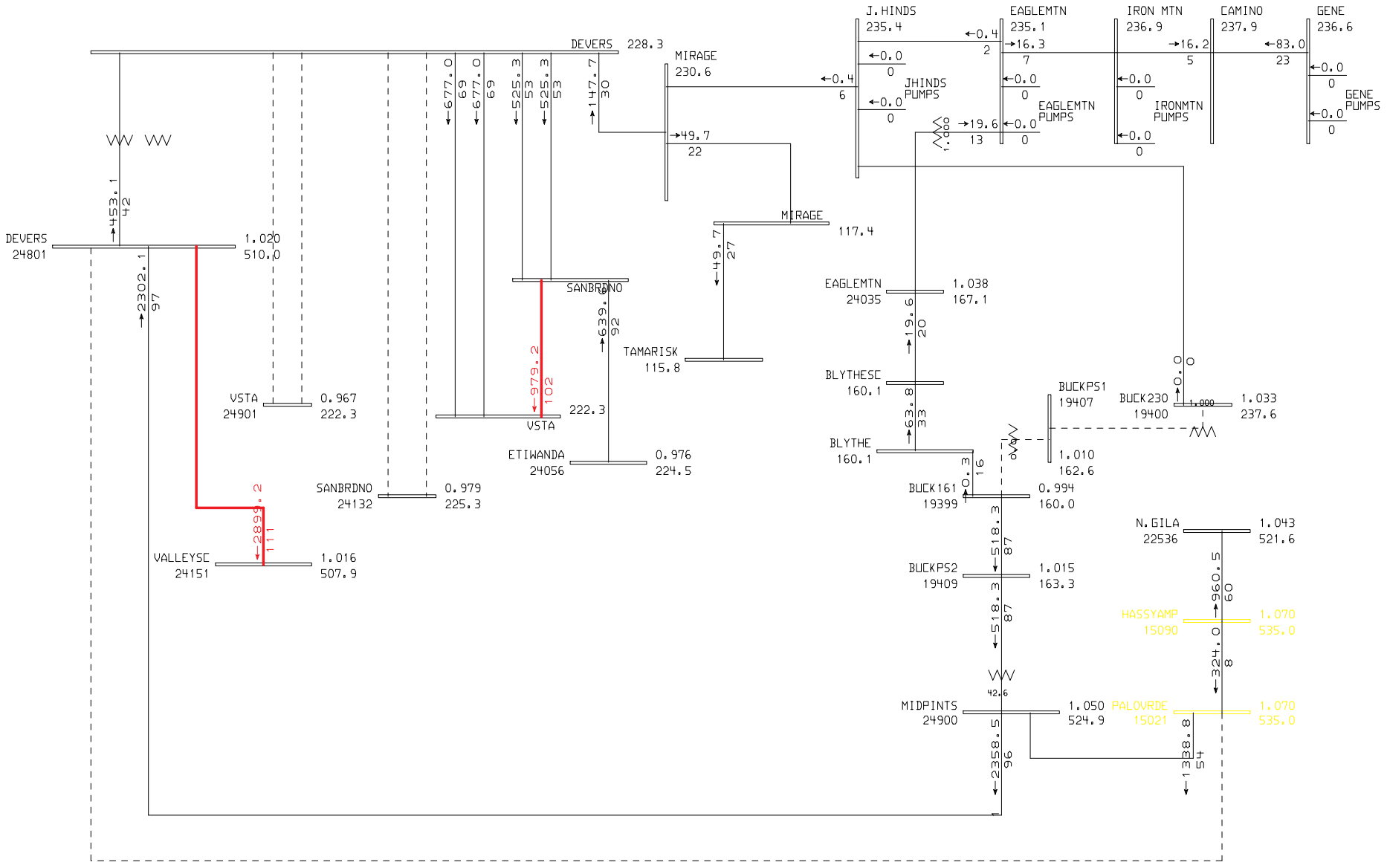

General Electric International, Inc. PSLF Program MW/Pct Mon Dec 19 18:09:51 2005

GENERAL ELECTRIC COMPANY

bep2postprojectwdpv2newnat.sav
BEPII SERIES COMPENSATION 520 MW INCREASE
WITH DPV2 - POST PROJECT

jhindbucklight2.drw
bep2postprojectwdpv2newnat.sav
Rating = 1

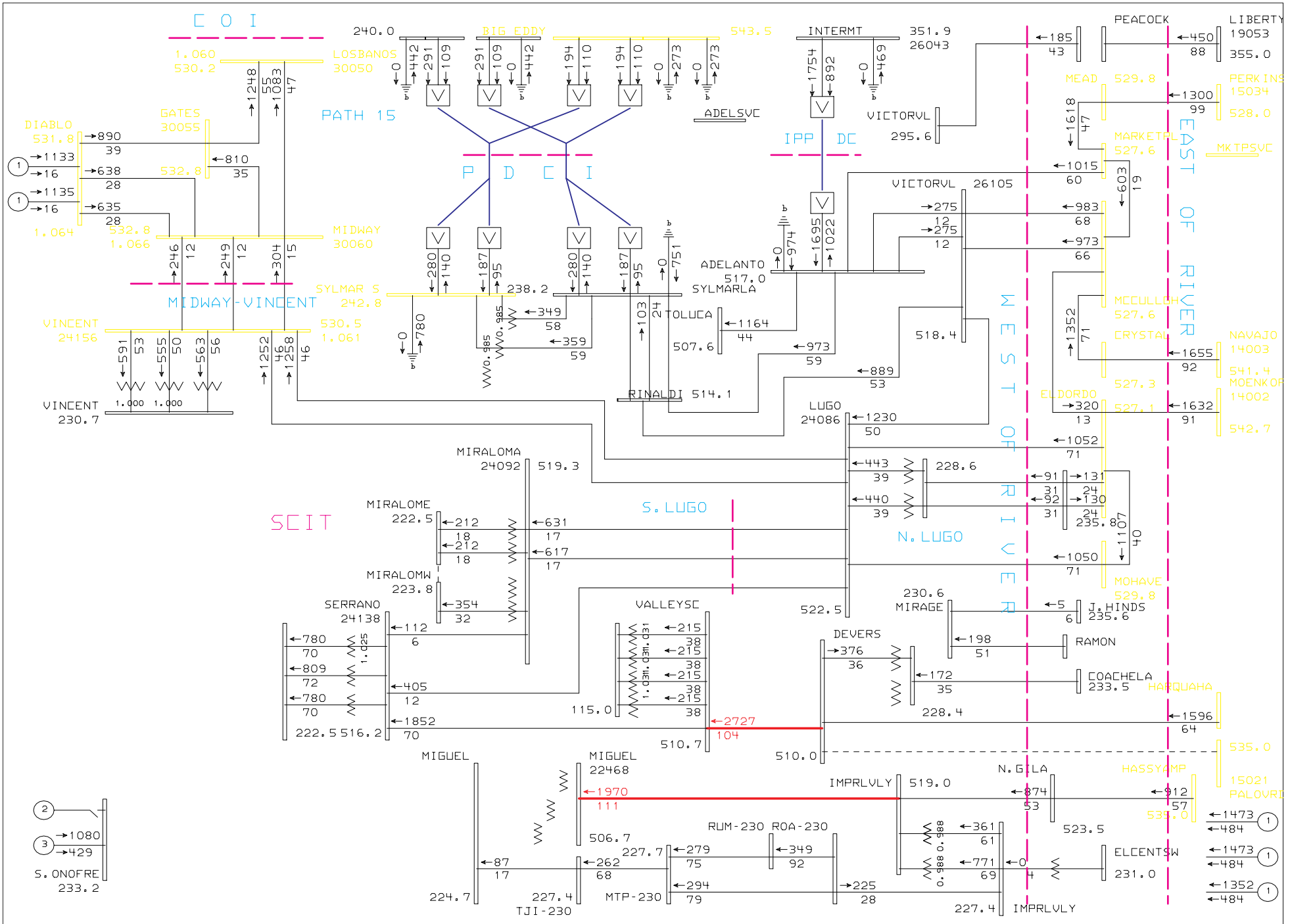

General Electric International, Inc. PSLF Program MW/Pct Mon Dec 19 18:10:21 2005

GENERAL ELECTRIC COMPANY

bep2preprojectwdpv2new.sav
BEP1 SERIES COMPENSATION 520 MW INCREASE
WITH DPV2 - POST PROJECT

SCAL09a.drw
bep2preprojectwdpv2new.sav
Rating = 1

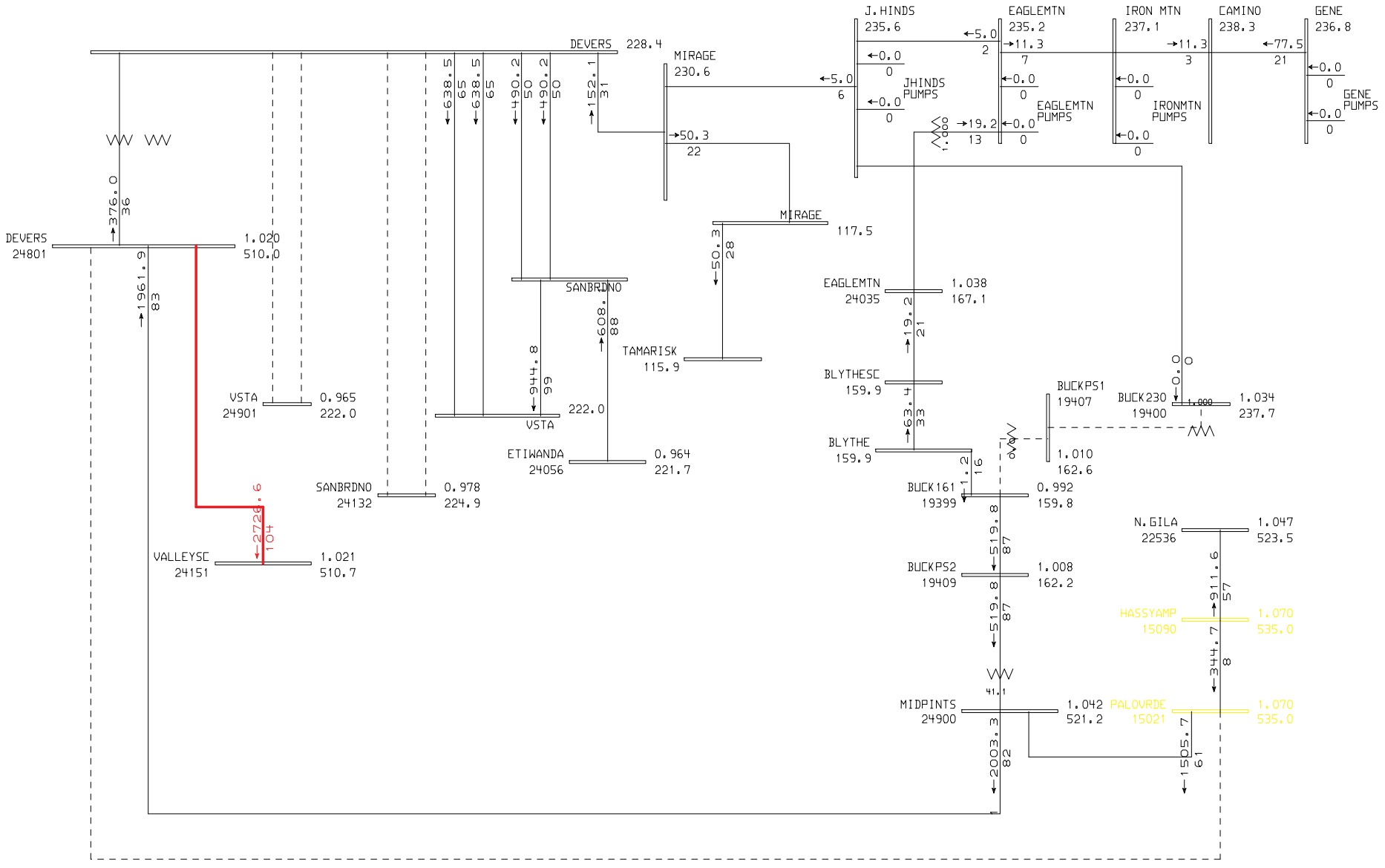

General Electric International, Inc. PSLF Program MW/Pct Mon Dec 19 18:10:30 2005

GENERAL ELECTRIC COMPANY

bep2preprojectwdpv2new.sav
BEP1 SERIES COMPENSATION 520 MW INCREASE
WITH DPV2 - POST PROJECT

jhindbucklight2.drw
bep2preprojectwdpv2new.sav
Rating = 1

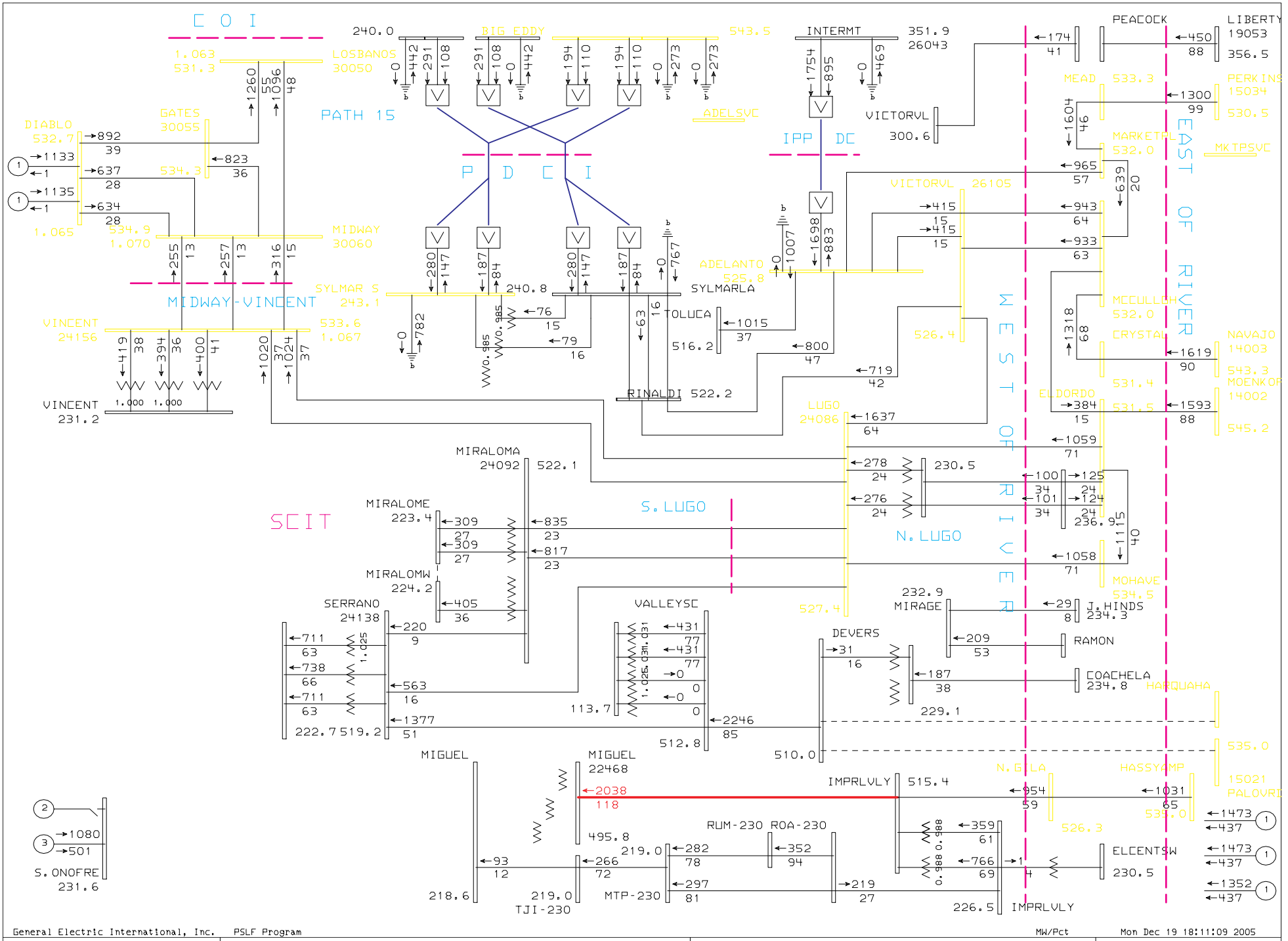

General Electric International, Inc. PSLF Program MW/Pct Mon Dec 19 18:11:09 2005

GENERAL ELECTRIC COMPANY	bep2preprojectwodpv2new.sav BEPII SERIES COMPENSATION POST-PROJECT	DPV2	SCAL09a.drw bep2preprojectwodpv2new.sav Rating = 1

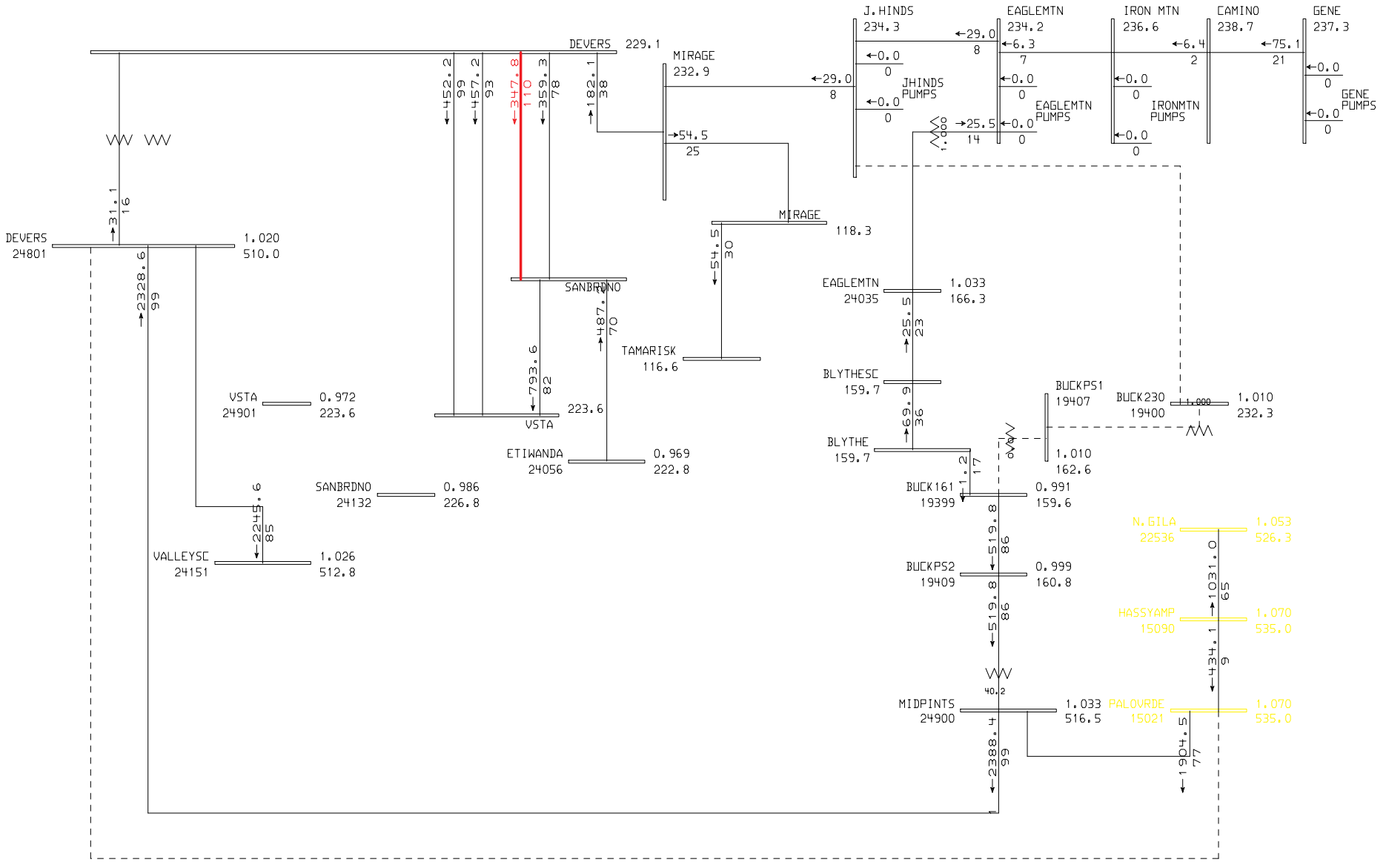

General Electric International, Inc. PSLF Program MW/Pct Mon Dec 19 18:11:19 2005

GENERAL ELECTRIC COMPANY	bep2preprojectwodpv2new.sav BEPII SERIES COMPENSATION POST-PROJECT	DPV2	jhindbucklight2.drw bep2preprojectwodpv2new.sav Rating = 1

TRANSIENT STABILITY PLOTS

BVM1

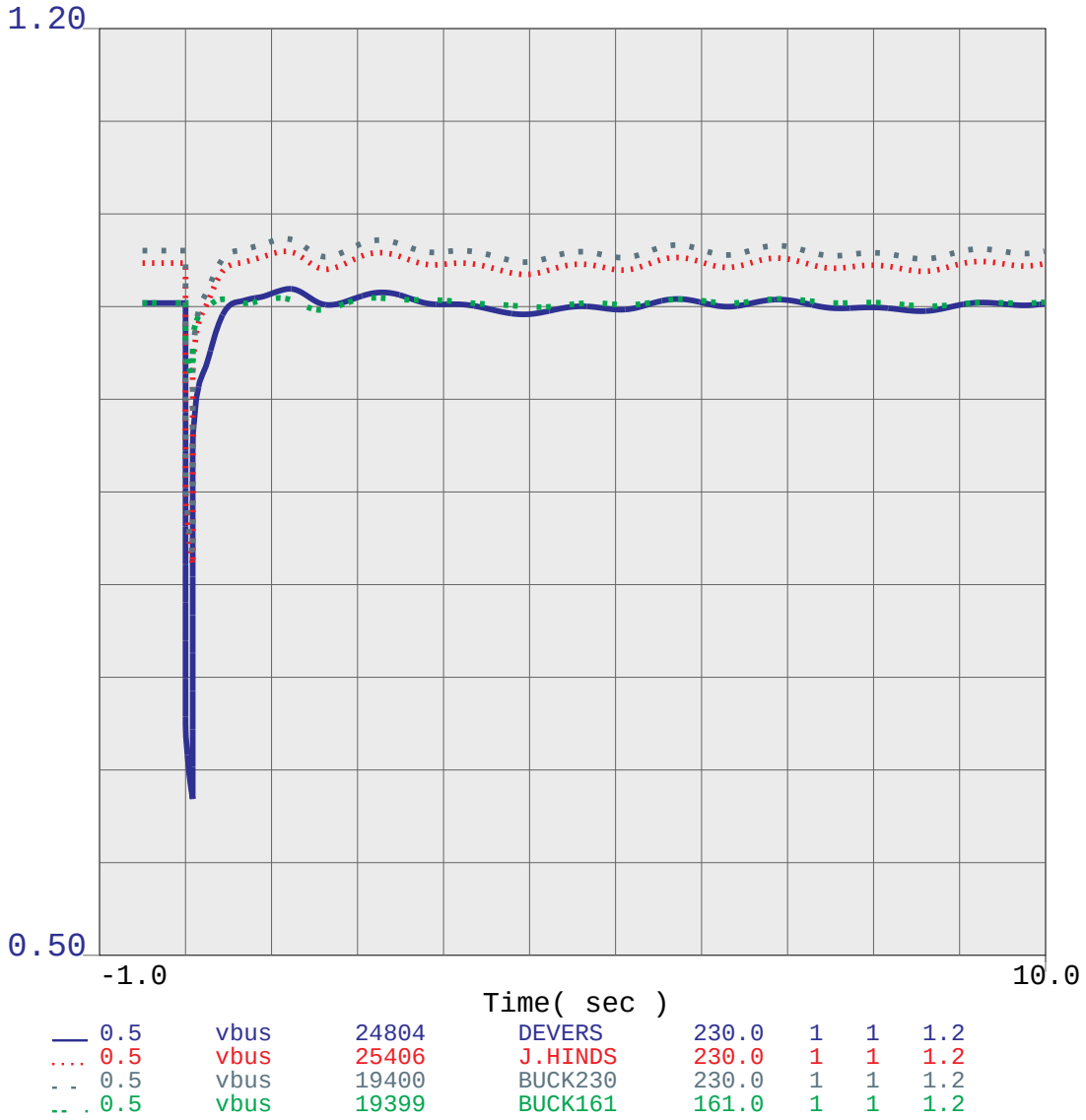

beppostprojectwdpv2stability_blywblysc_blyeagle
BEP1 SERIES COMPENSATION 520 MW INCREASE
WITH DPV2 - POST PROJECT

BVM2

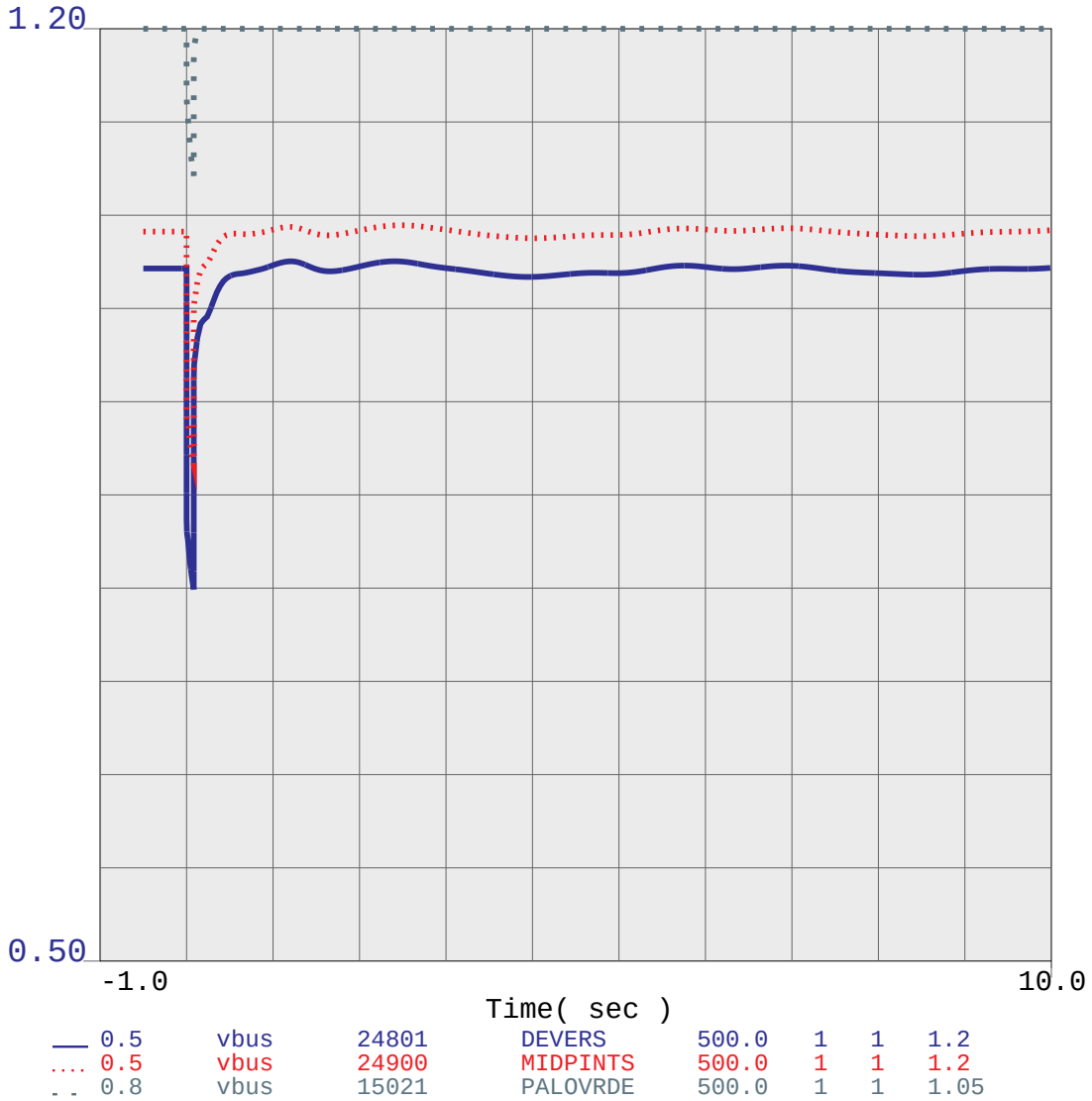

beppostprojectwdpv2stability_blywblysc_blyeagle
BEP1 SERIES COMPENSATION 520 MW INCREASE
WITH DPV2 - POST PROJECT

BVM2

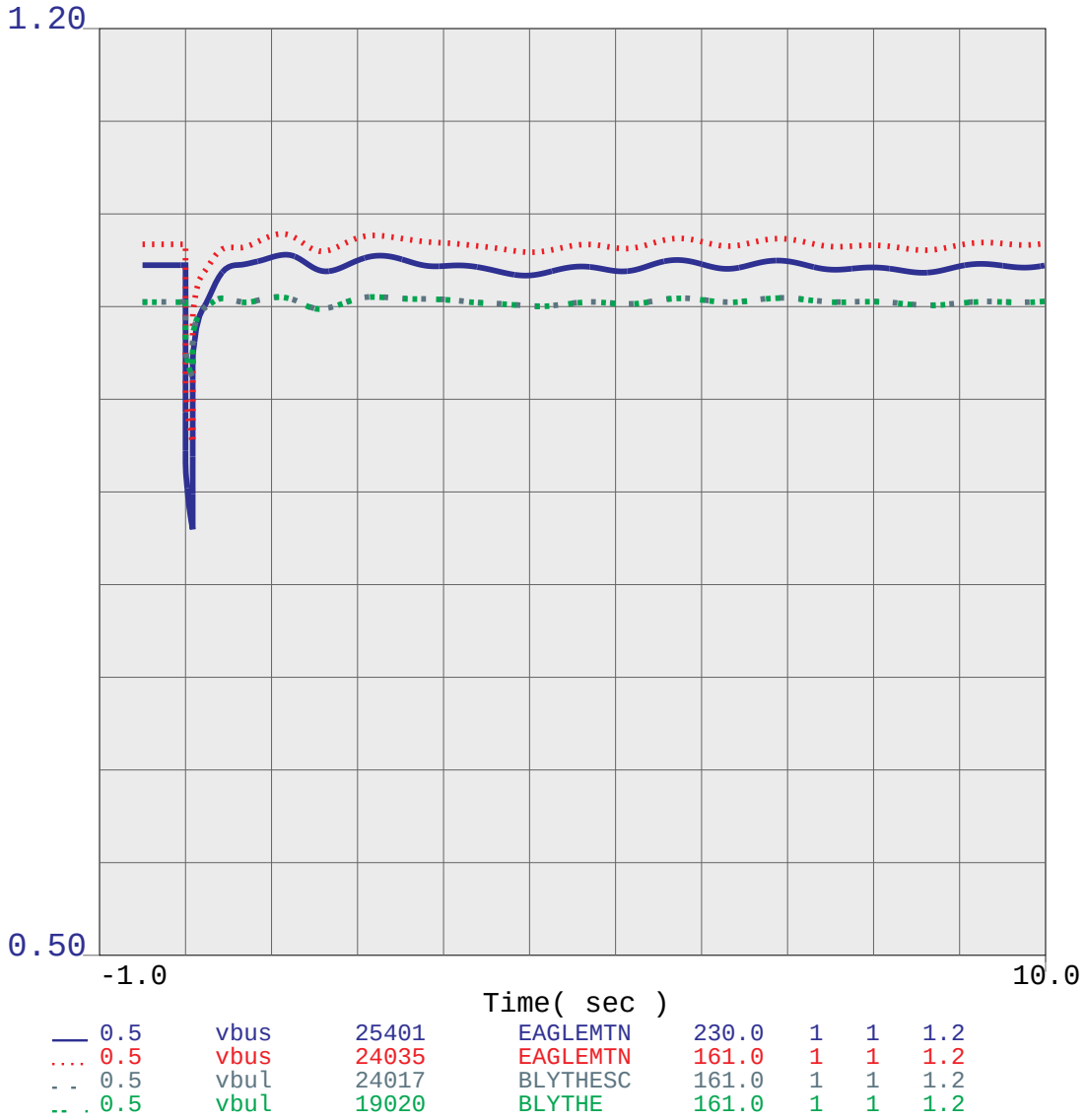

beppostprojectwdpv2stability_blywblysc_blyeagle
BEP1 SERIES COMPENSATION 520 MW INCREASE
WITH DPV2 - POST PROJECT

BVM2

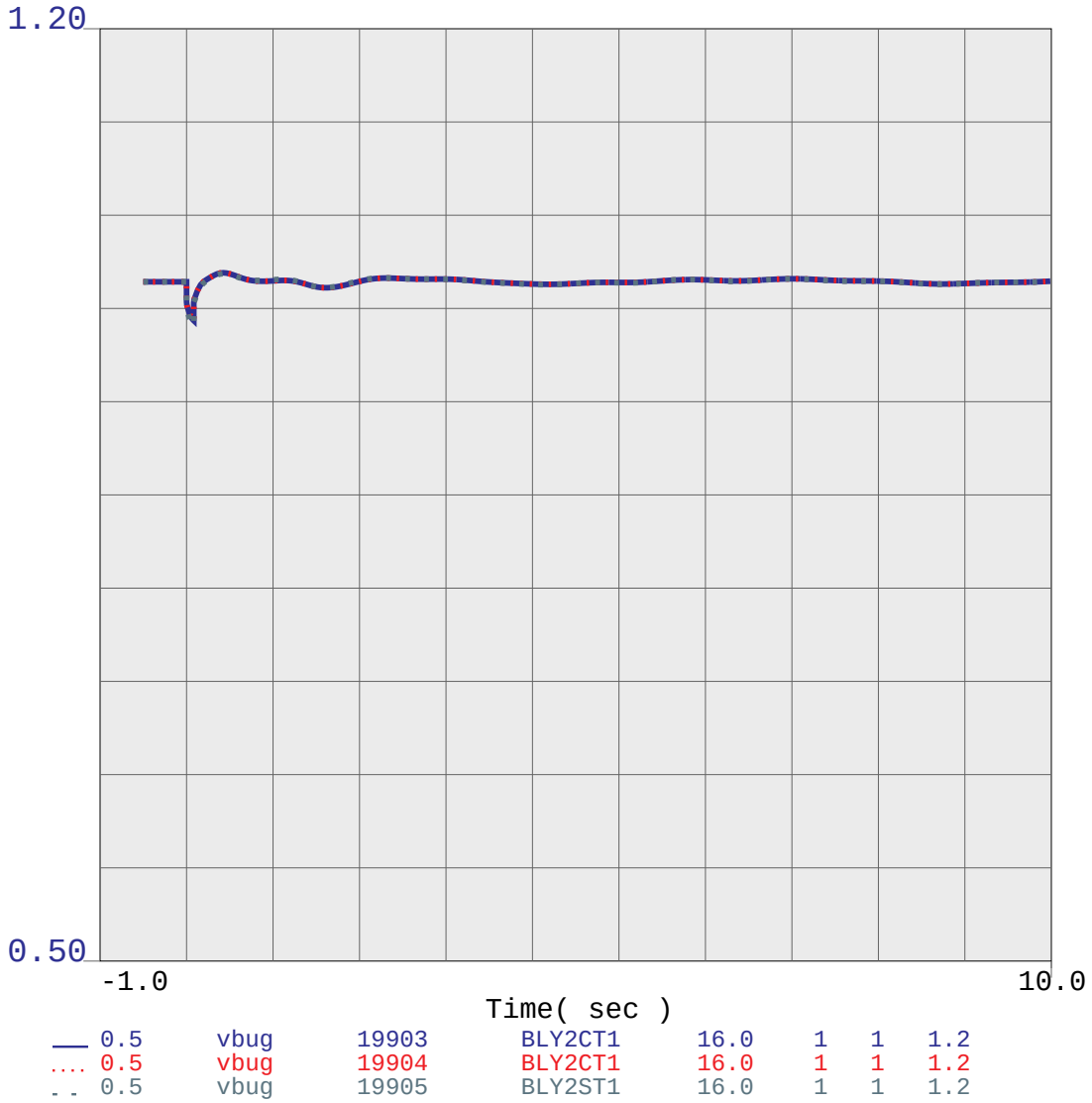

beppostprojectwdpv2stability_blywblysc_blyeagle
BEP1 SERIES COMPENSATION 520 MW INCREASE
WITH DPV2 - POST PROJECT

BVM2

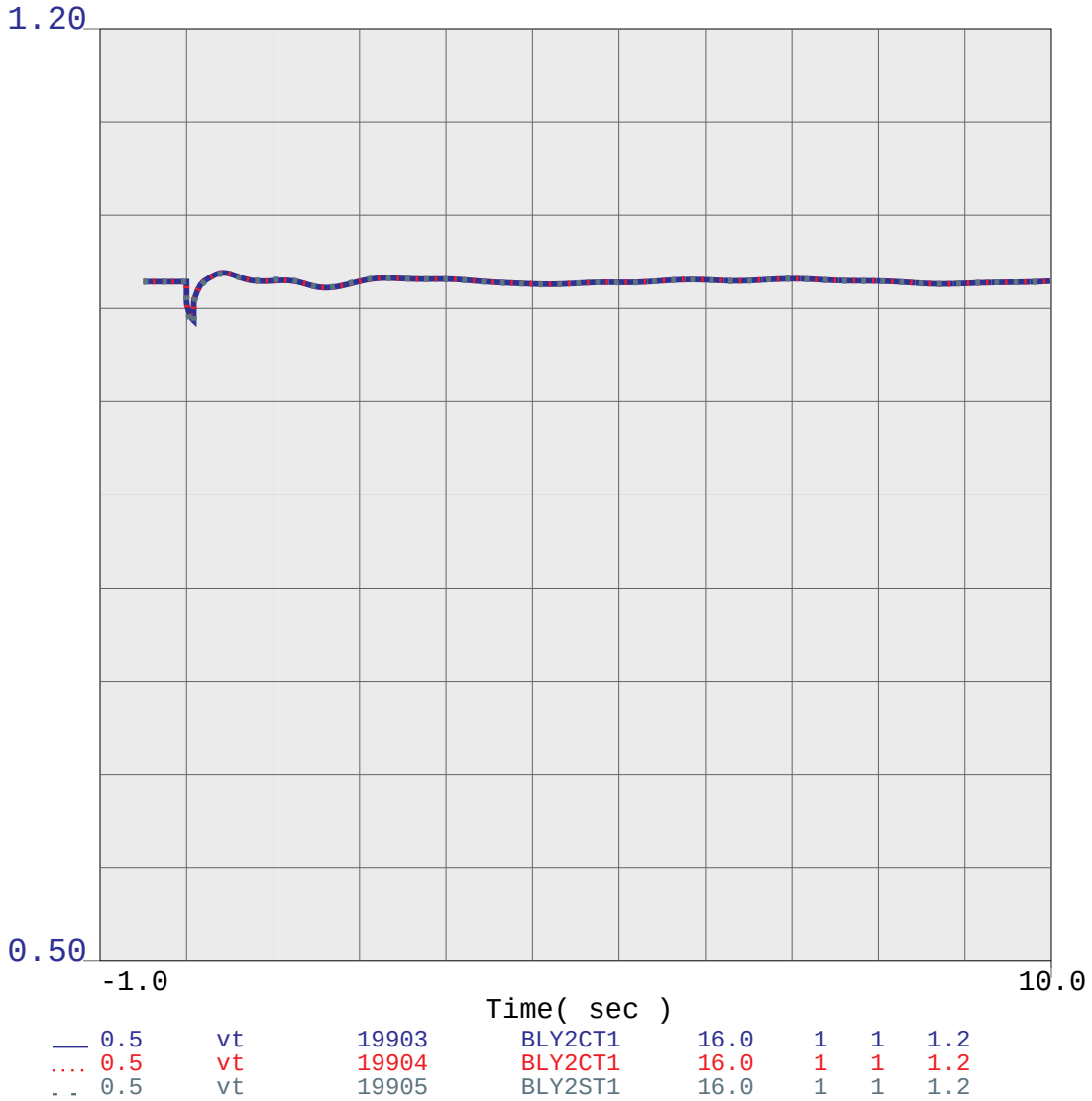

beppostprojectwdpv2stability_blywblysc_blyeagle
BEP1 SERIES COMPENSATION 520 MW INCREASE
WITH DPV2 - POST PROJECT

BVM2

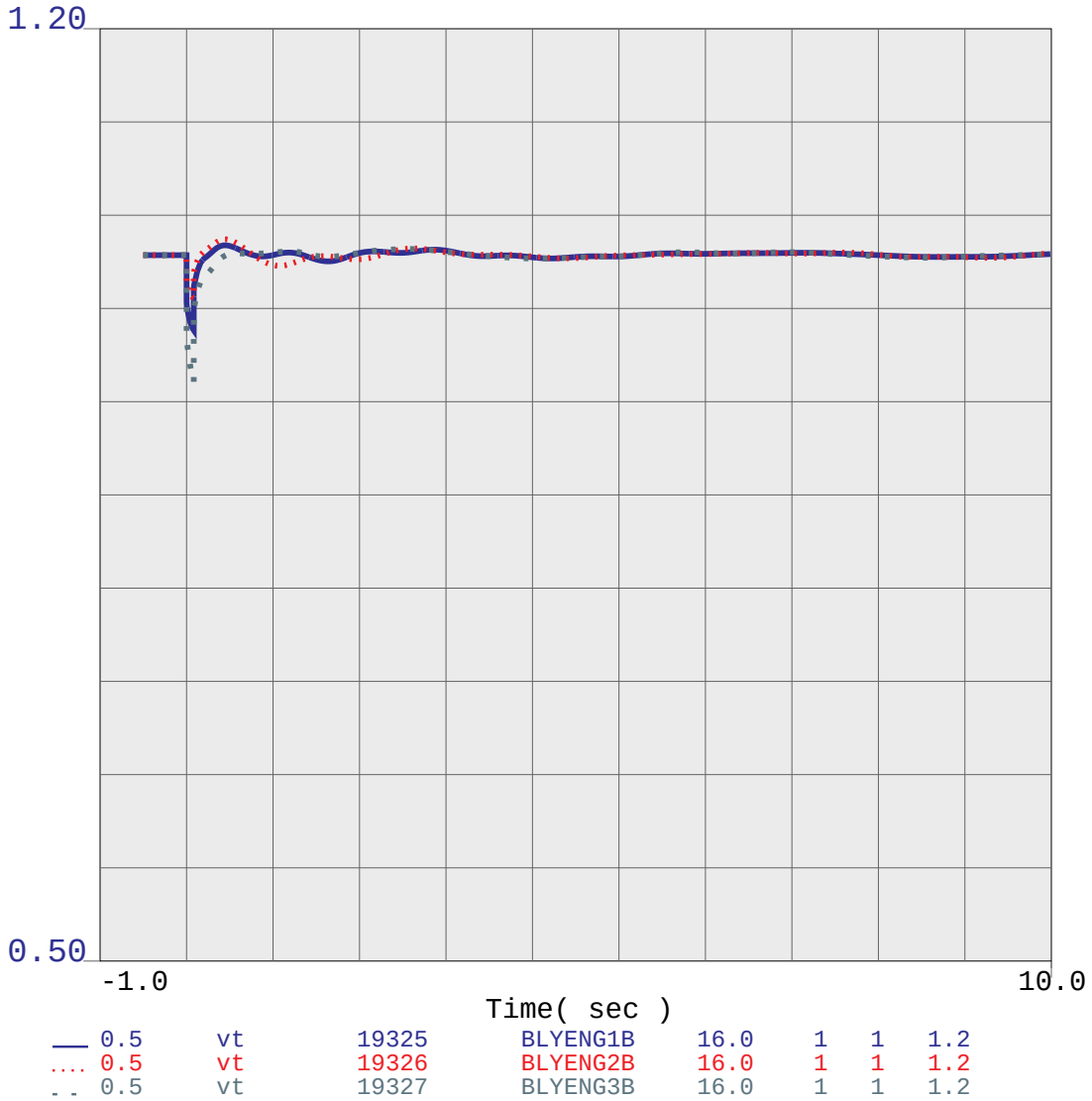

beppostprojectwdpv2stability_blywblysc_blyeagle
BEP1 SERIES COMPENSATION 520 MW INCREASE
WITH DPV2 - POST PROJECT

BVM2

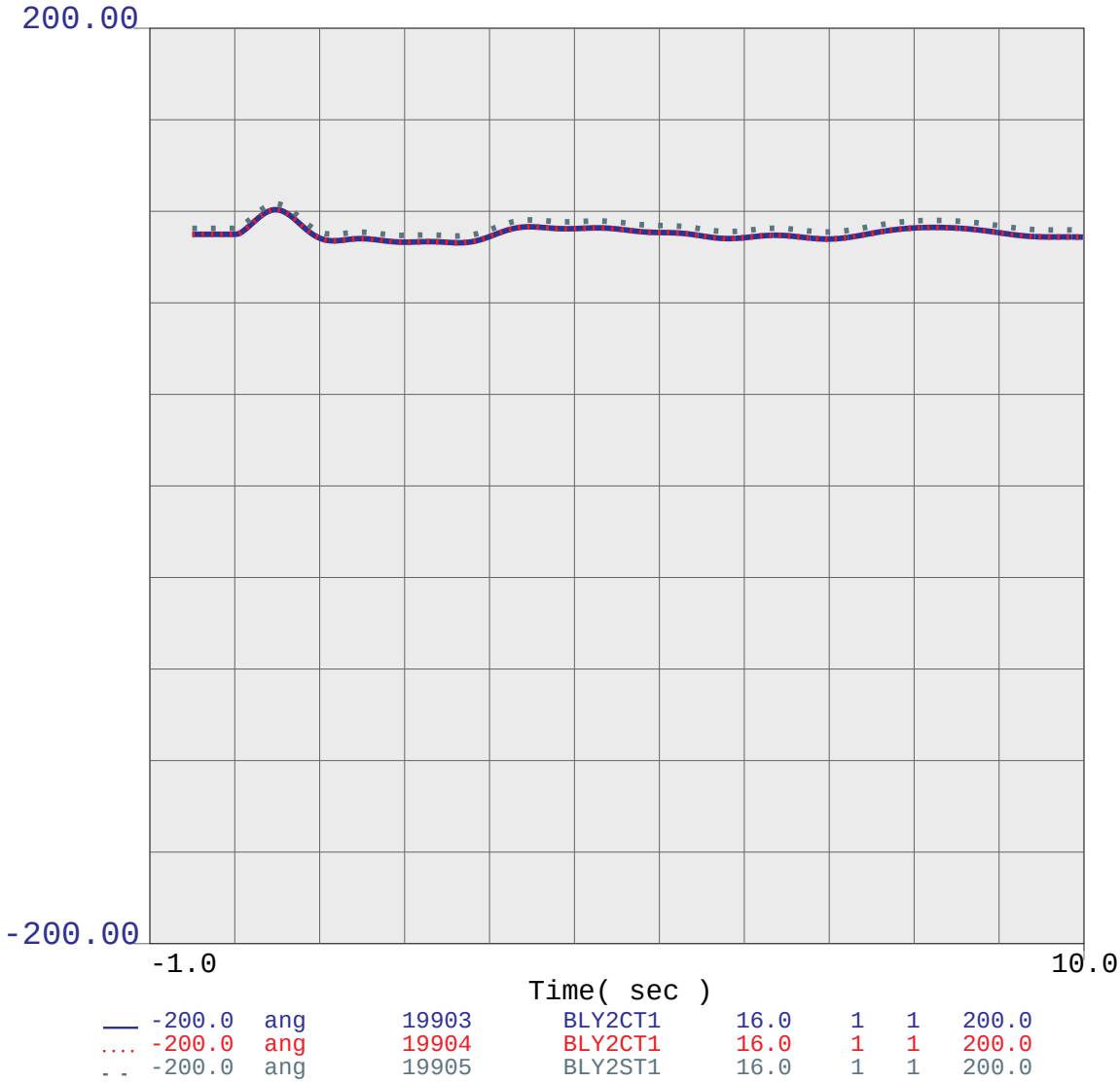

beppostprojectwdpv2stability_blywblysc_blyeagle
BEP1 SERIES COMPENSATION 520 MW INCREASE
WITH DPV2 - POST PROJECT

BVM2

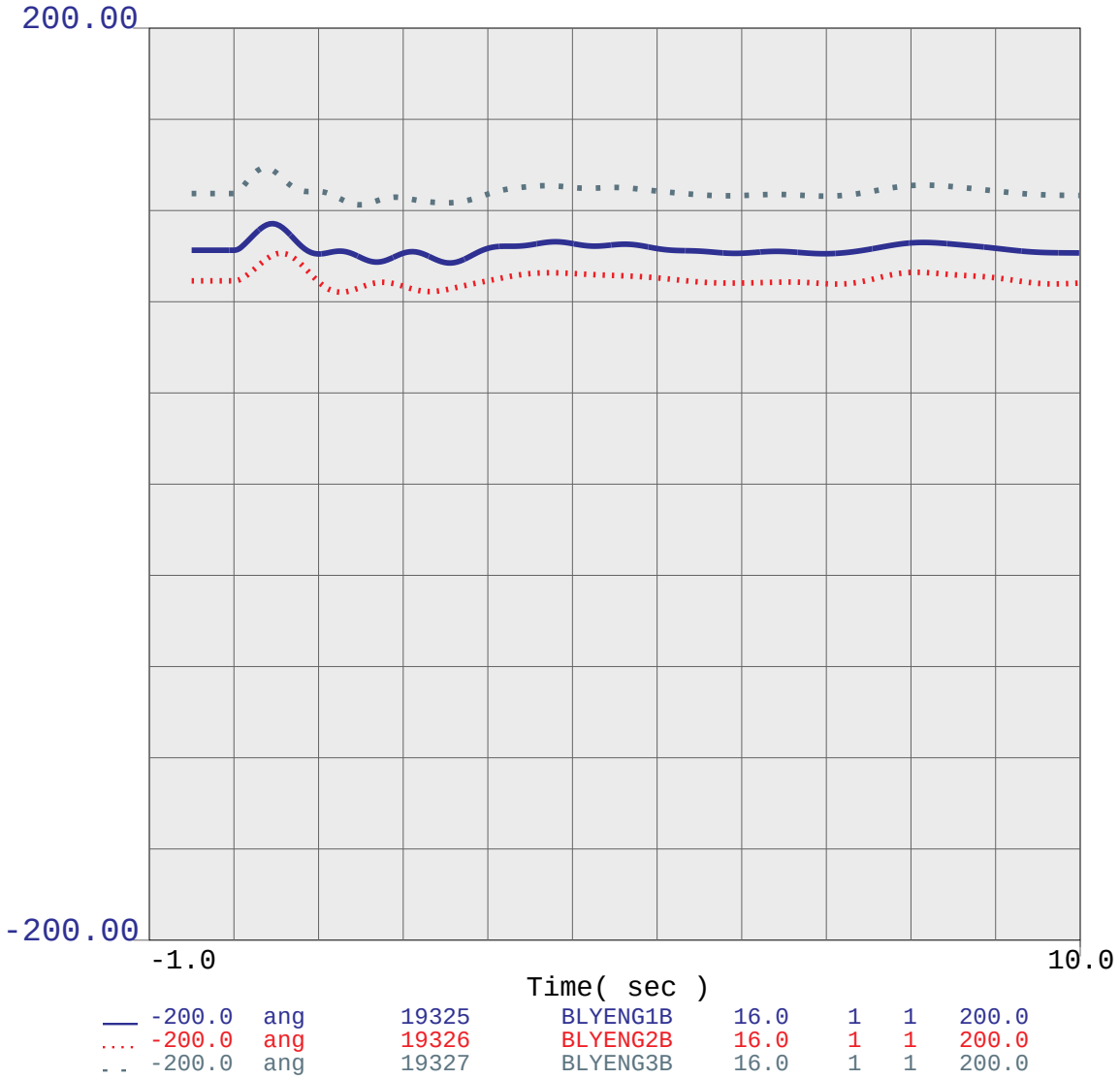

beppostprojectwdpv2stability_blywblysc_blyeagle
BEP1 SERIES COMPENSATION 520 MW INCREASE
WITH DPV2 - POST PROJECT

BVM1

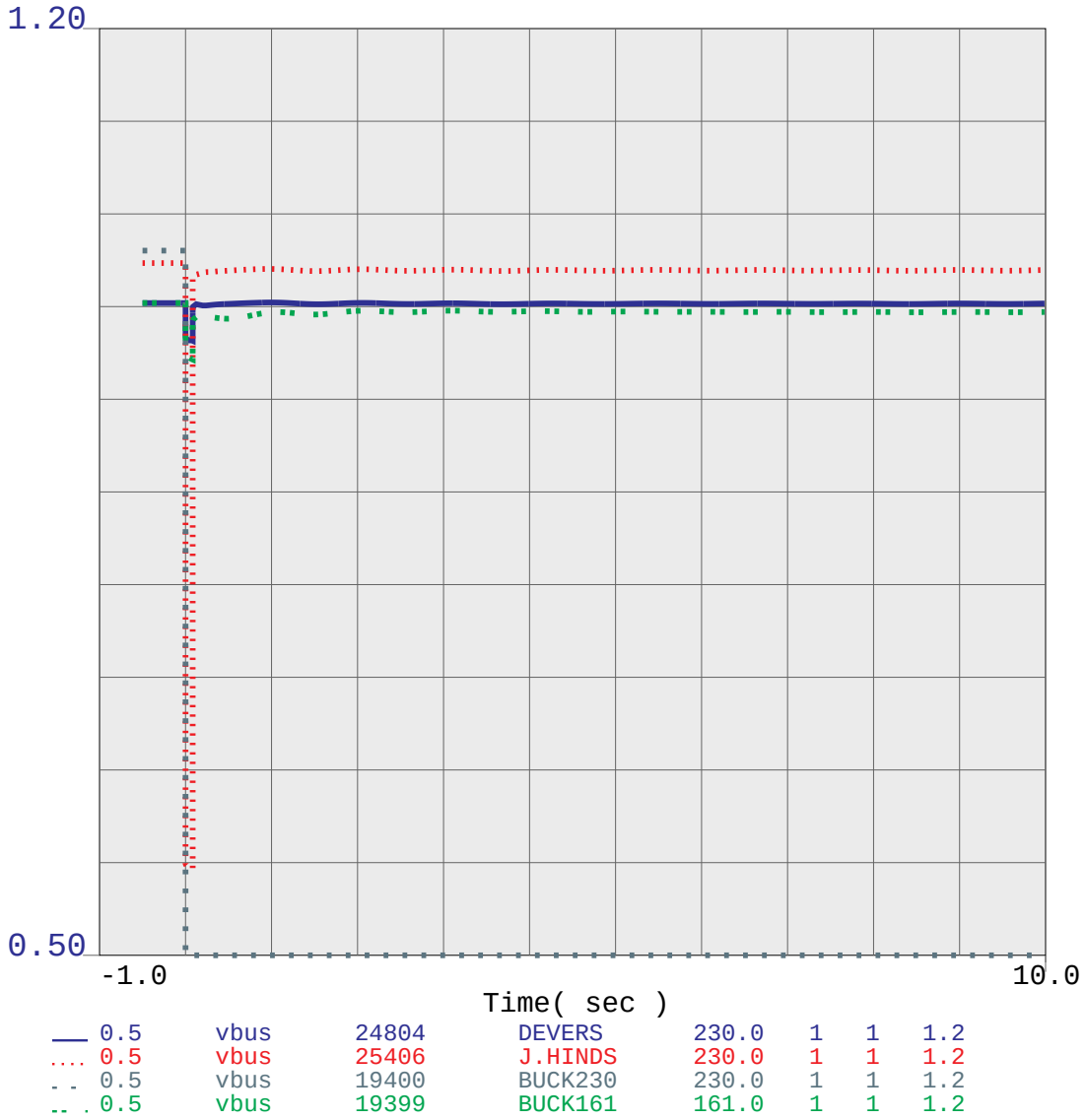

beppostprojectwdpv2stability_blywblyscBuck-JHinds-slo
SERIES COMPENSATION 520MW INCREASE
WITH DPV2 - POST PROJECT

BVM2

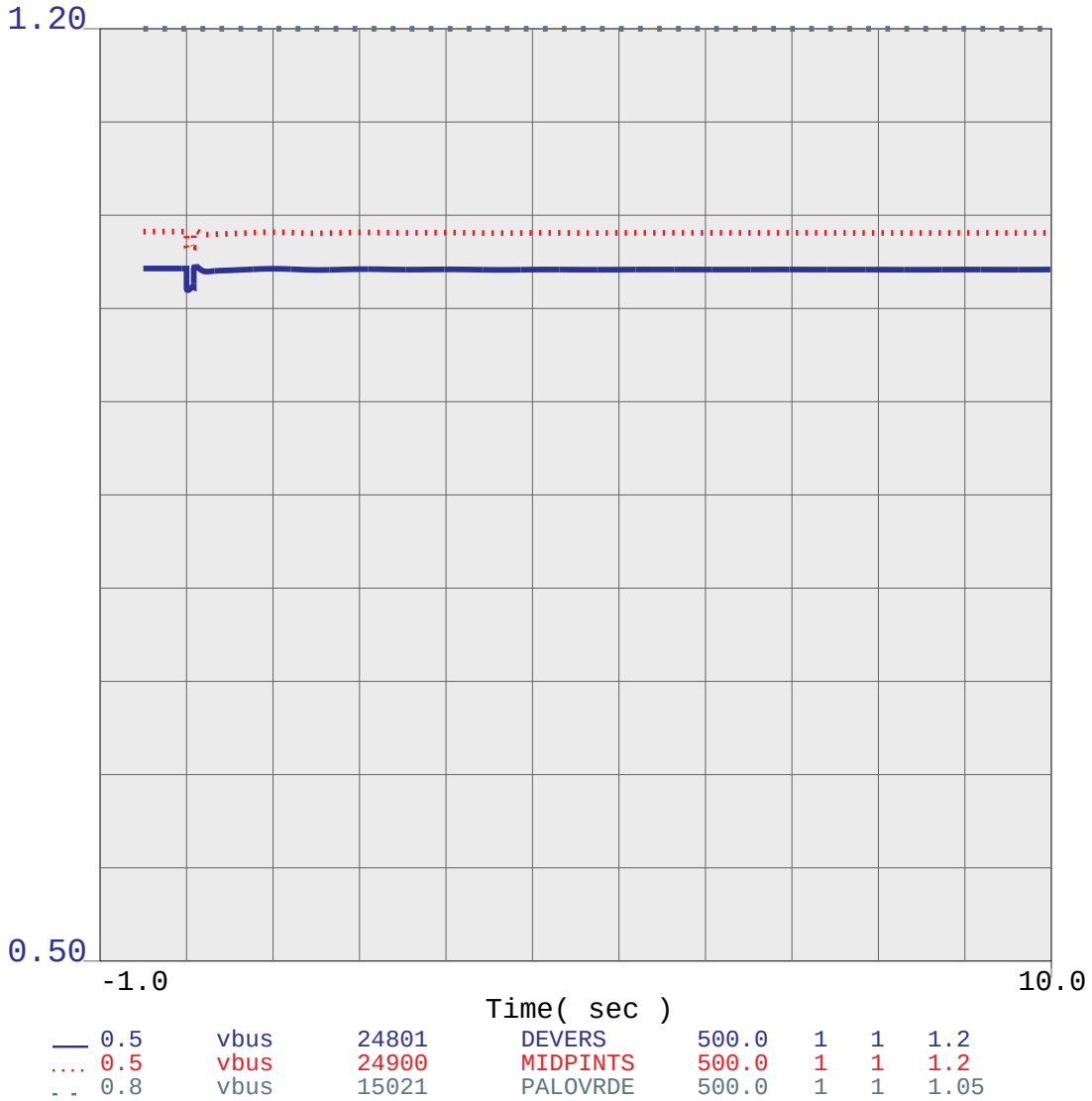

beppostprojectwdpv2stability_blywblyscBuck-JHinds-slo
SERIES COMPENSATION 520MW INCREASE
WITH DPV2 - POST PROJECT

BVM2

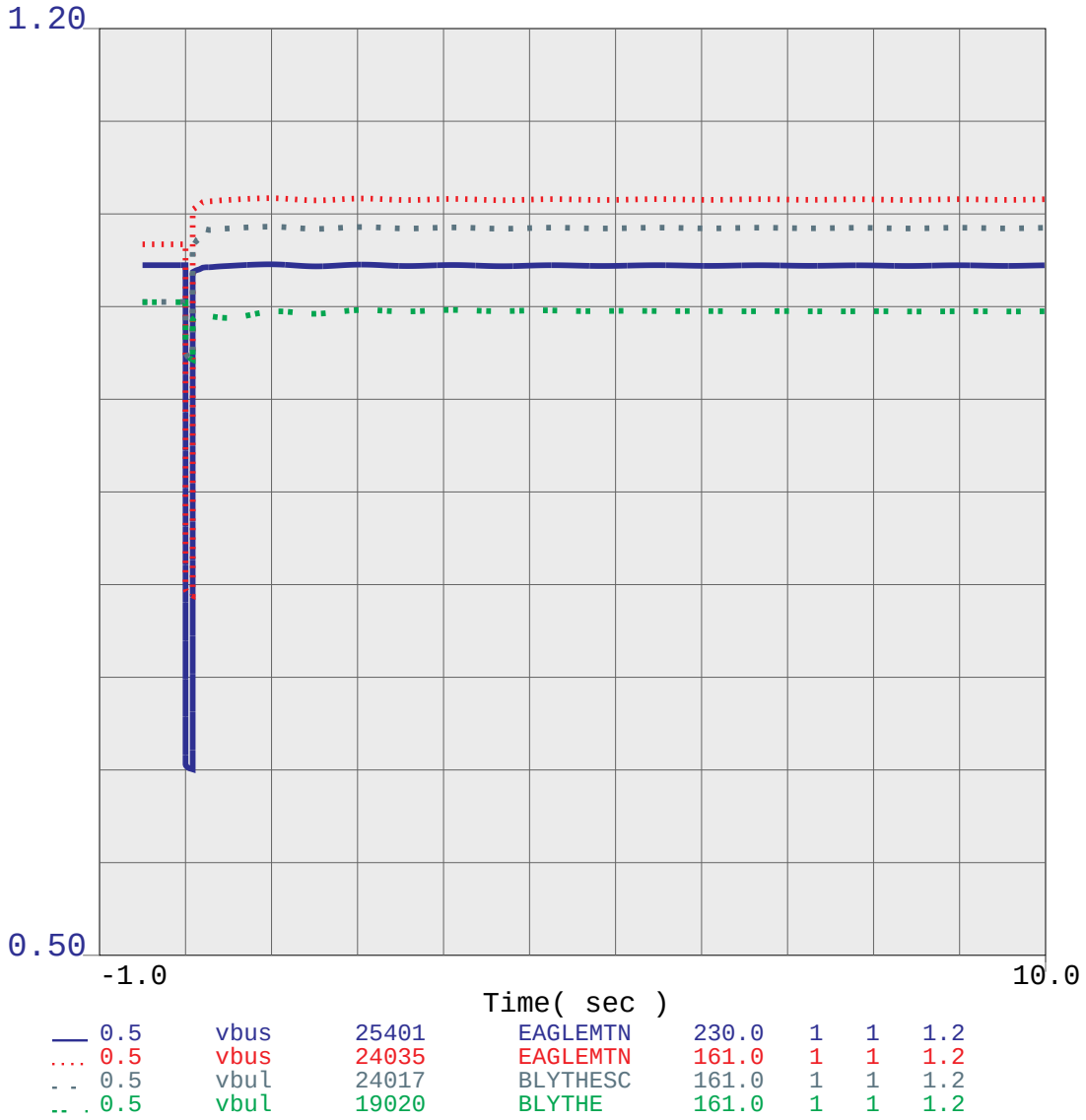

beppostprojectwdpv2stability_blywblyscBuck-JHinds-slo
SERIES COMPENSATION 520MW INCREASE
WITH DPV2 - POST PROJECT

BVM2

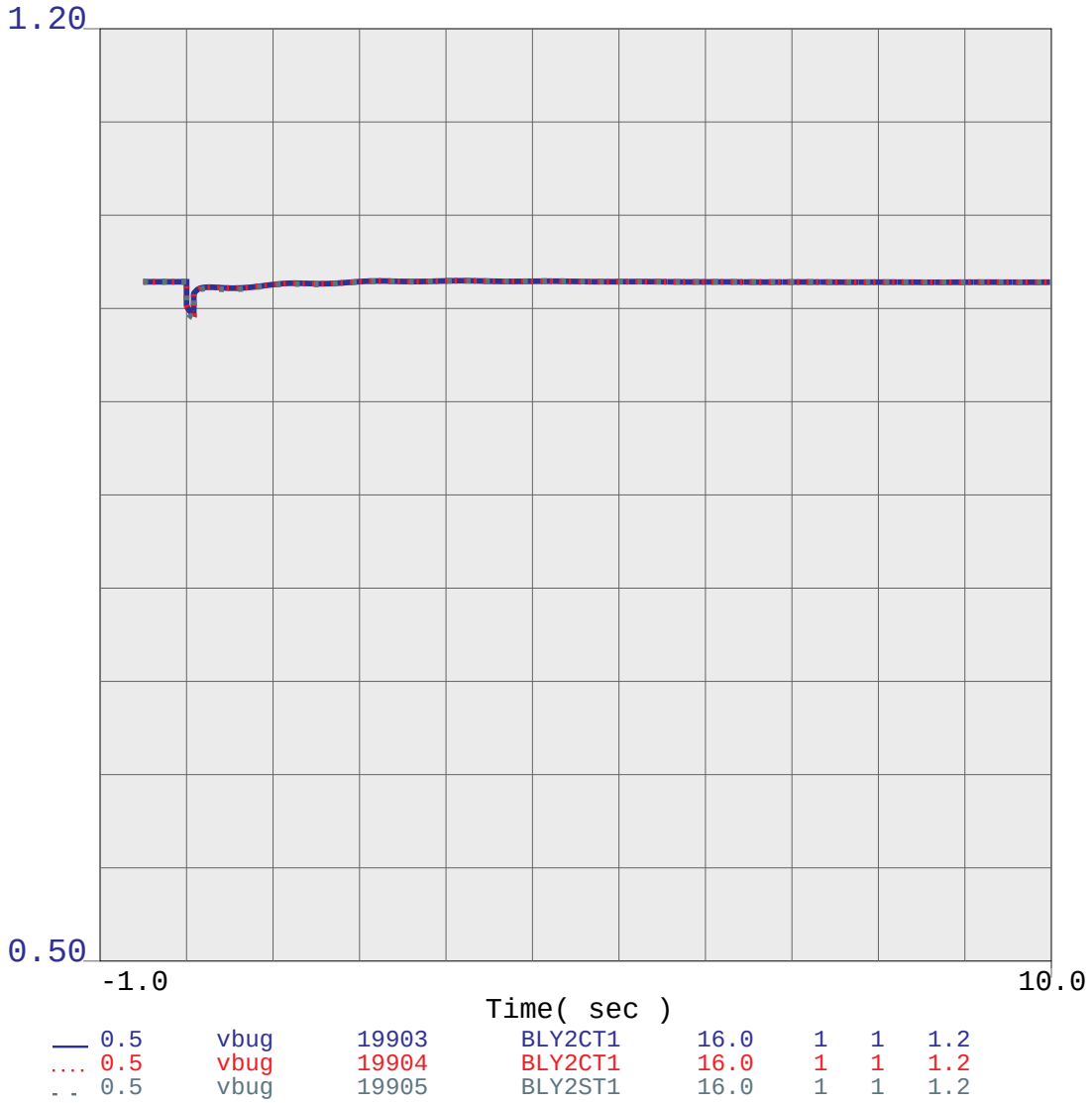

beppostprojectwdpv2stability_blywblyscBuck-JHinds-slo
SERIES COMPENSATION 520MW INCREASE
WITH DPV2 - POST PROJECT

BVM2

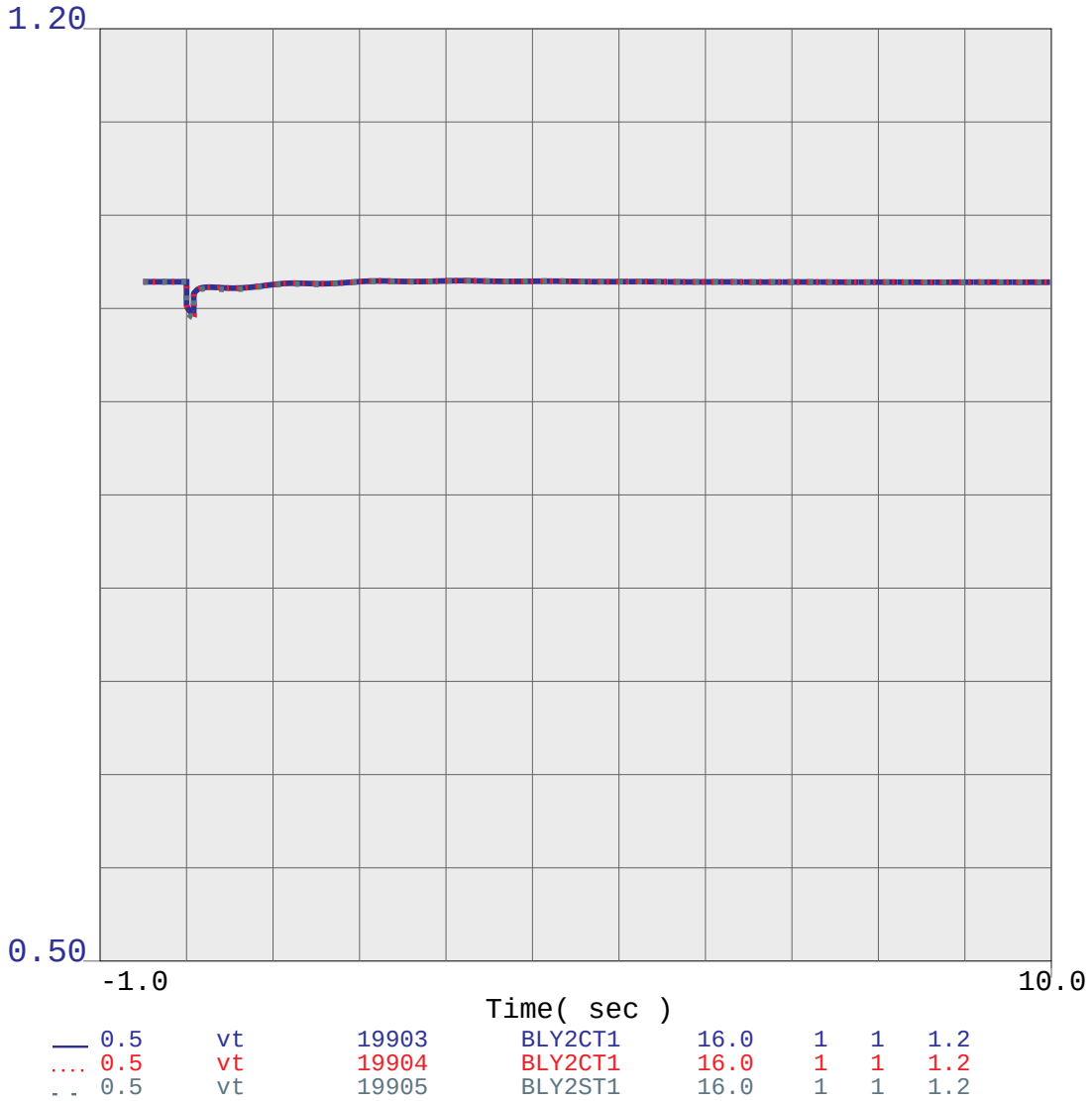

beppostprojectwdpv2stability_blywblyscBuck-JHinds-slo
SERIES COMPENSATION 520MW INCREASE
WITH DPV2 - POST PROJECT

BVM2

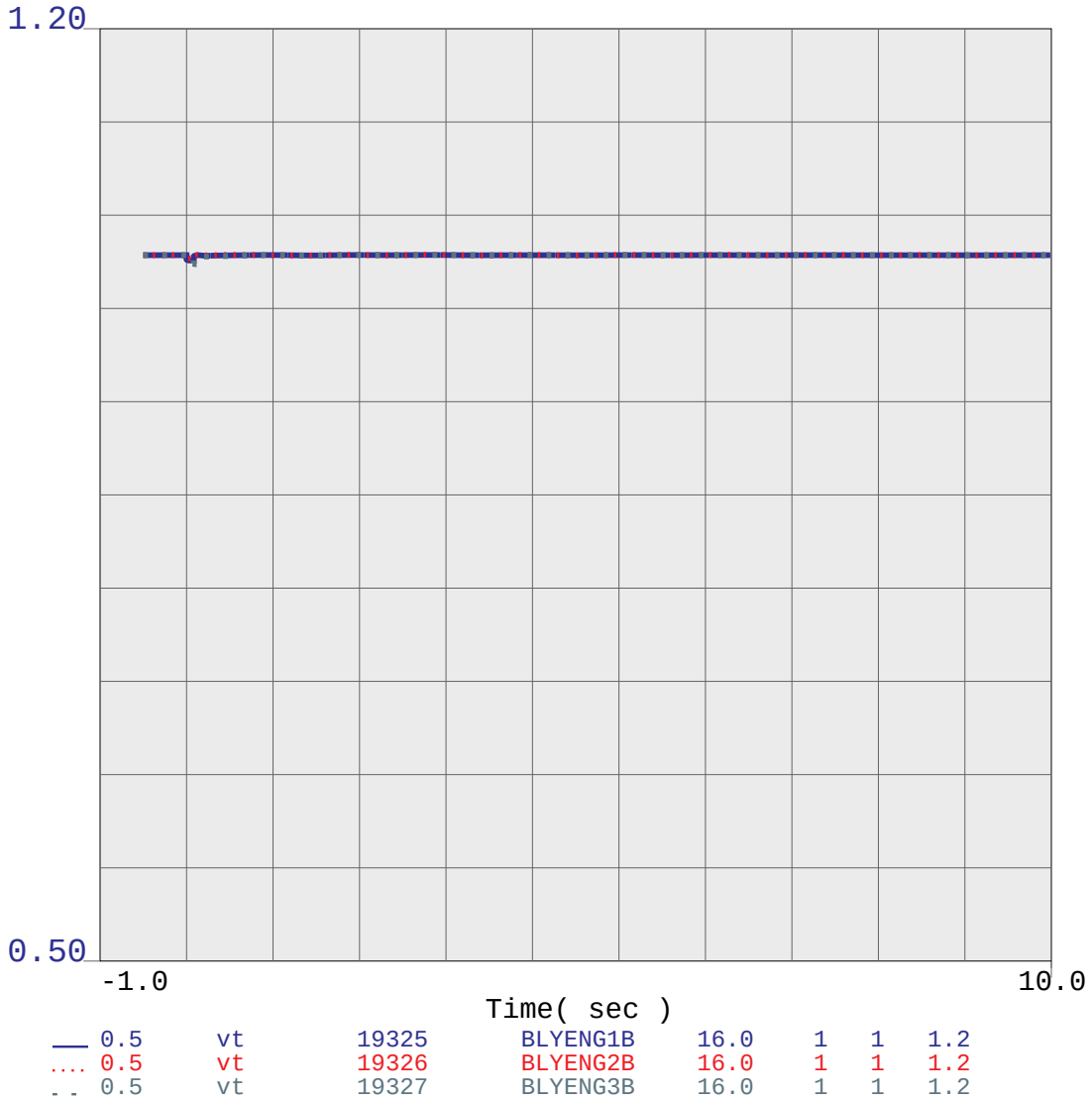

beppostprojectwdpv2stability_blywblyscBuck-JHinds-slo
SERIES COMPENSATION 520MW INCREASE
WITH DPV2 - POST PROJECT

BVM2

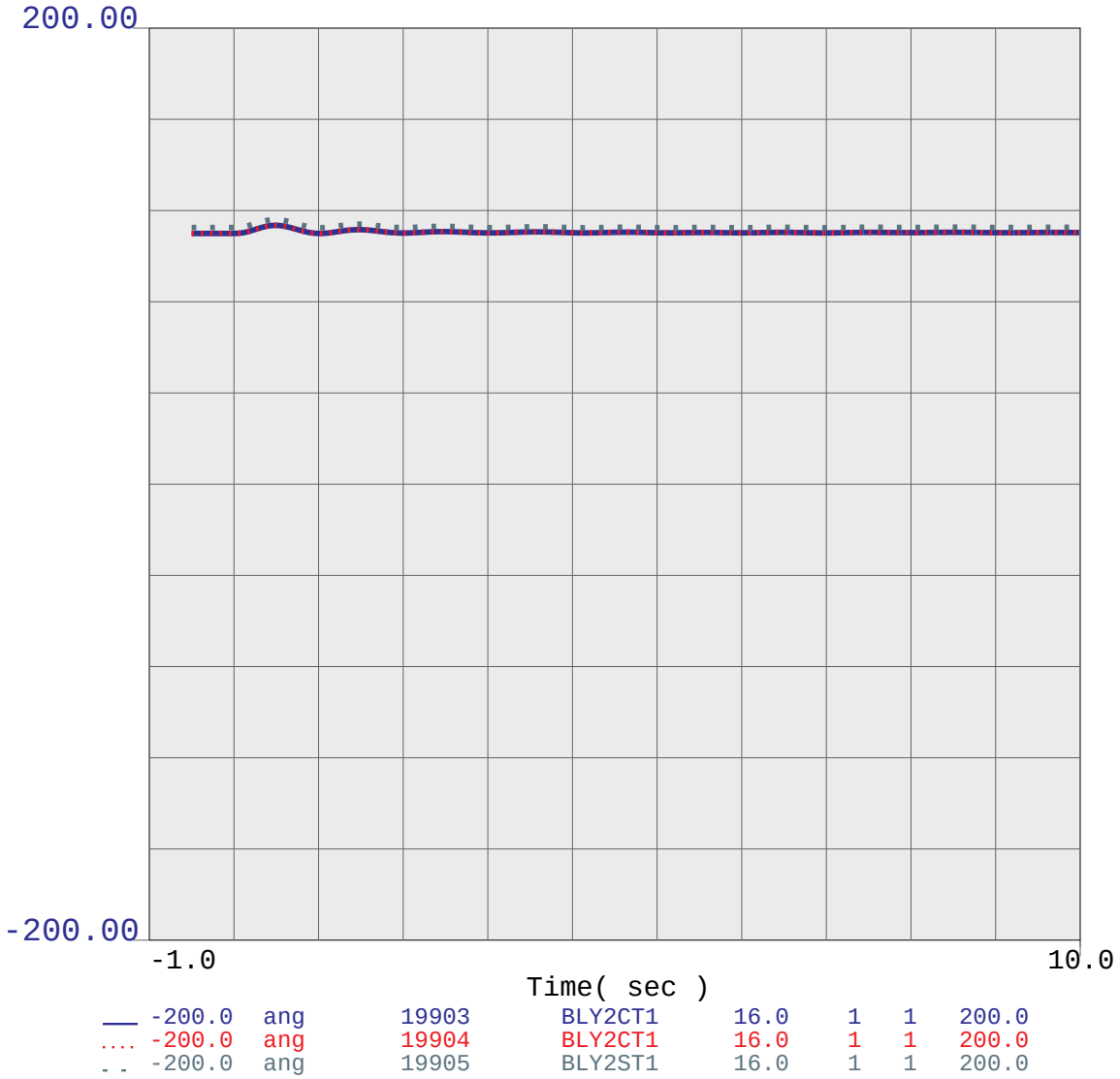

beppostprojectwdpv2stability_blywblyscBuck-JHinds-slo
SERIES COMPENSATION 520MW INCREASE
WITH DPV2 - POST PROJECT

BVM2

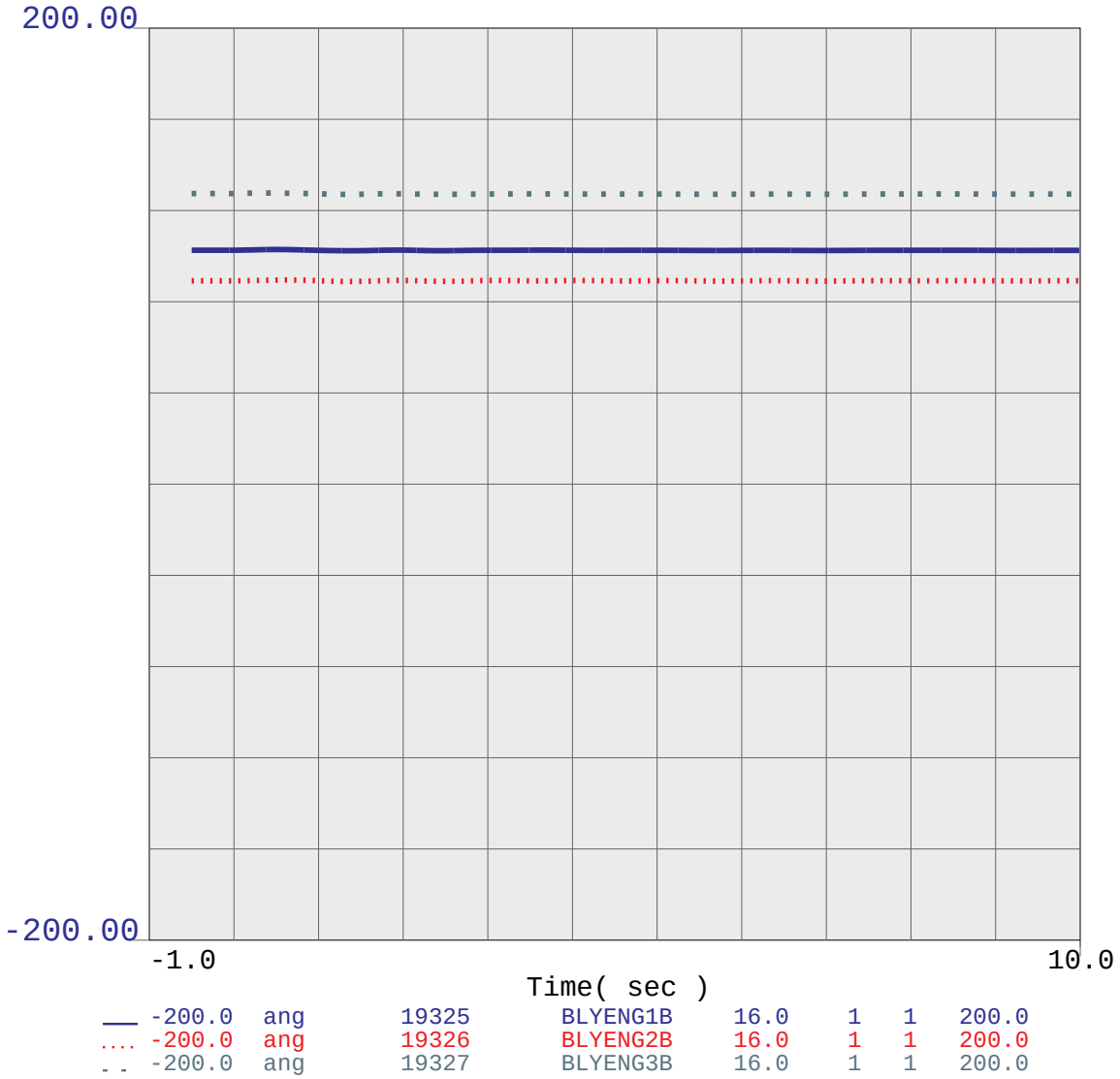

beppostprojectwdpv2stability_blywblyscBuck-JHinds-slo
SERIES COMPENSATION 520MW INCREASE
WITH DPV2 - POST PROJECT

BVM1

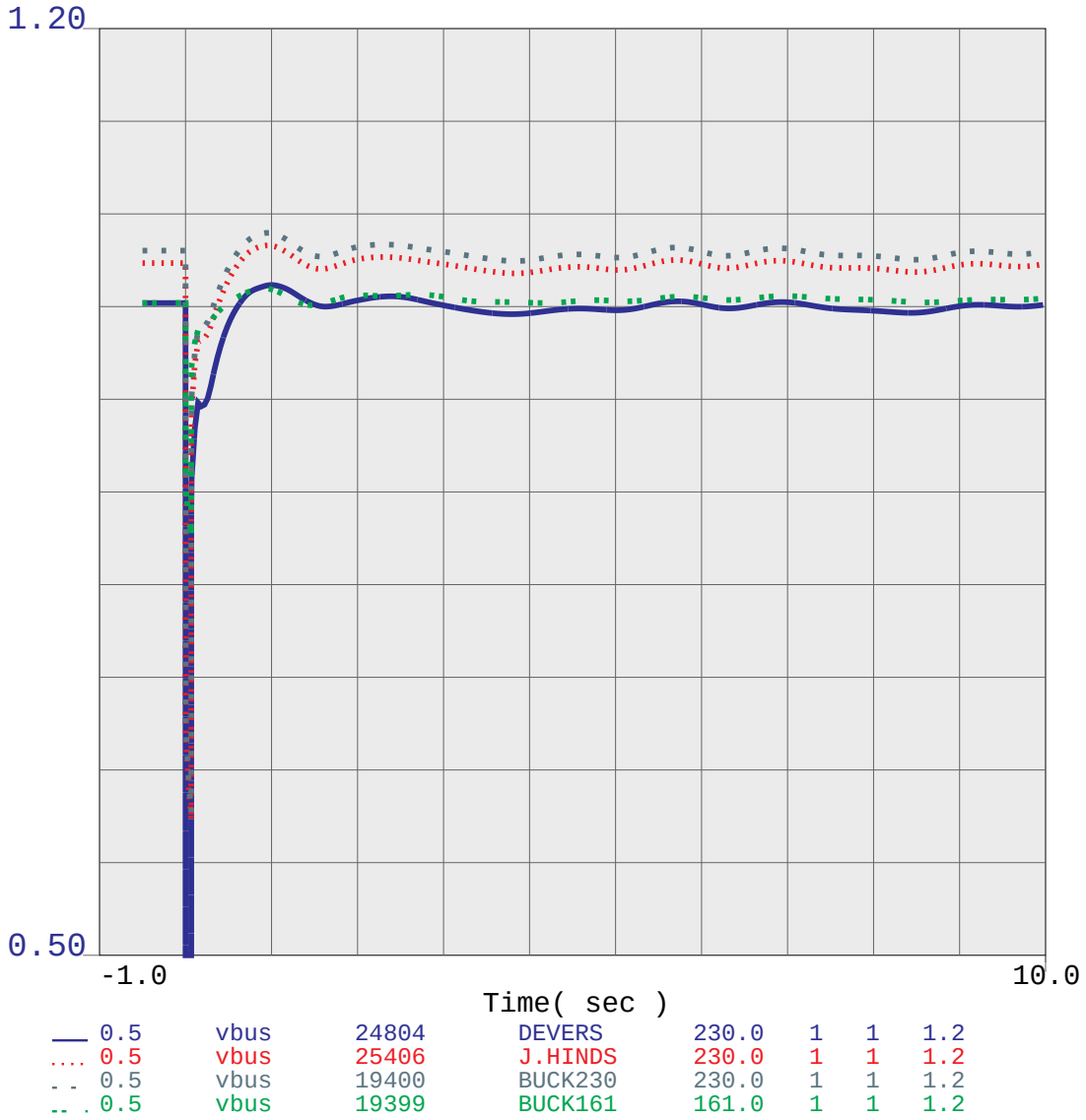

beppostprojectwdpv2stability_Deversmidptcoacram-dlo
SERIES COMPENSATION 520MW INCREASE
WITH DPV2 - POST PROJECT

BVM2

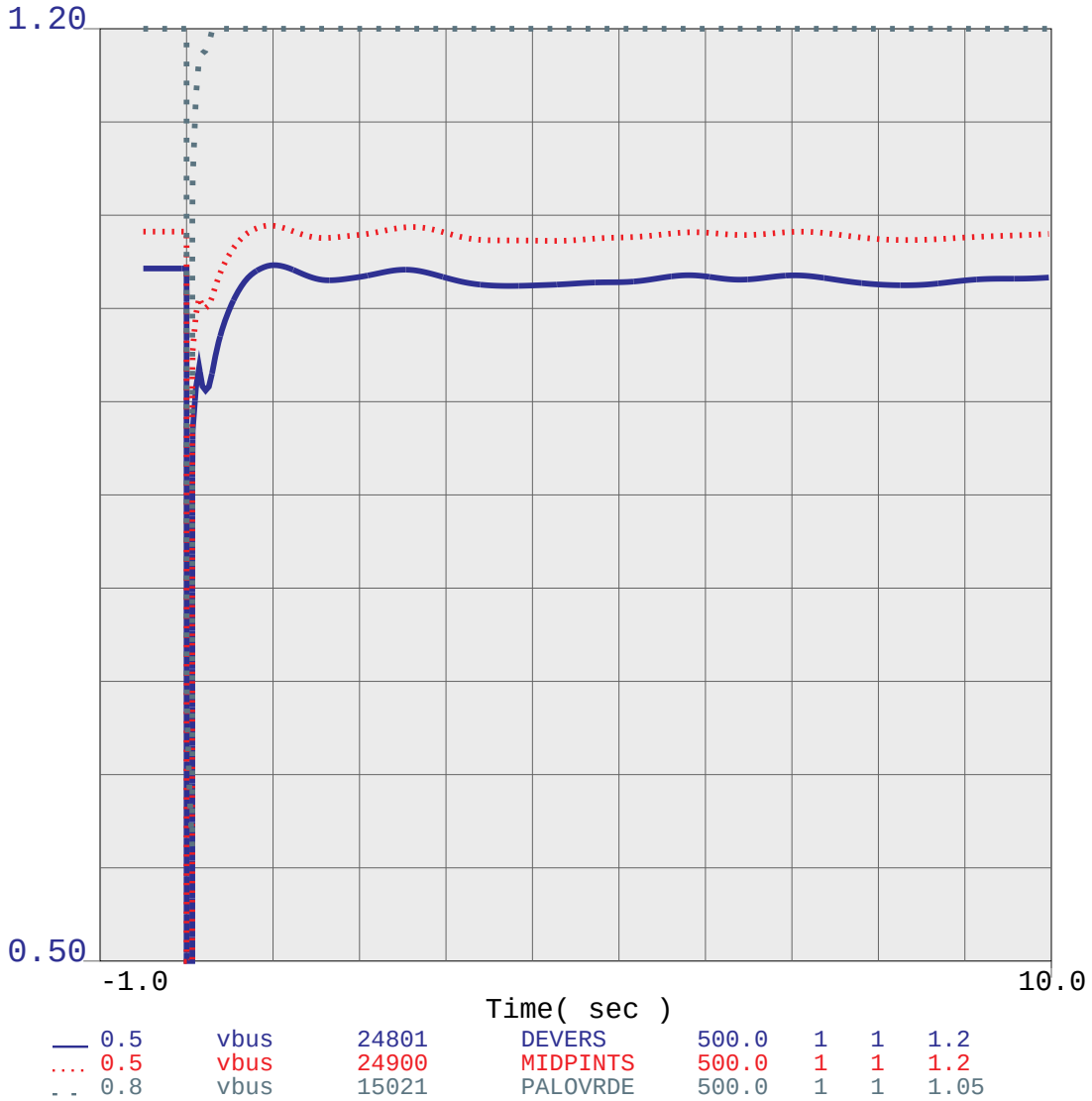

beppostprojectwdpv2stability_Deversmidptcoacram-dlo
SERIES COMPENSATION 520MW INCREASE
WITH DPV2 - POST PROJECT

BVM2

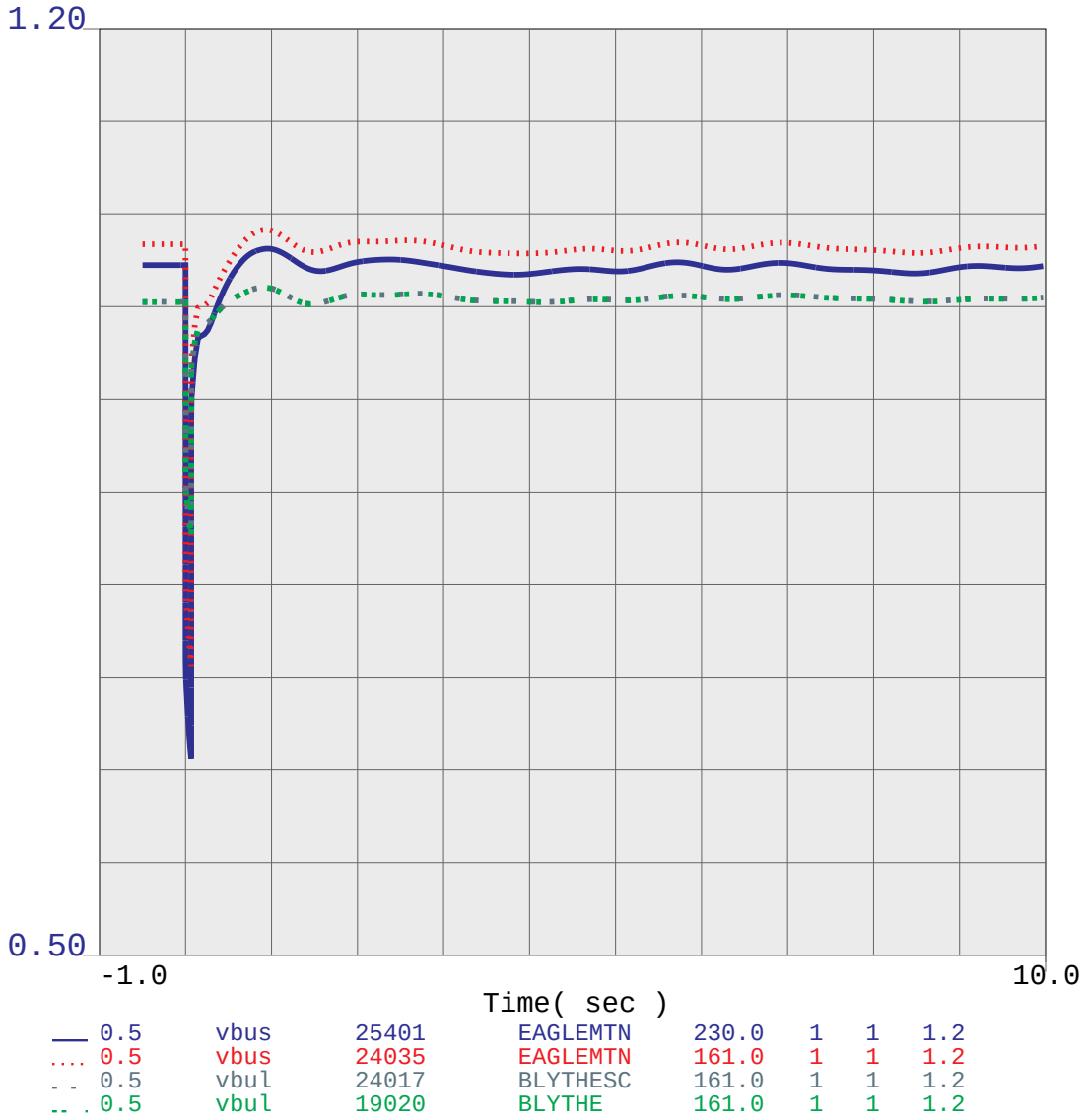

beppostprojectwdpv2stability_Deversmidptcoacram-dlo
SERIES COMPENSATION 520MW INCREASE
WITH DPV2 - POST PROJECT

BVM2

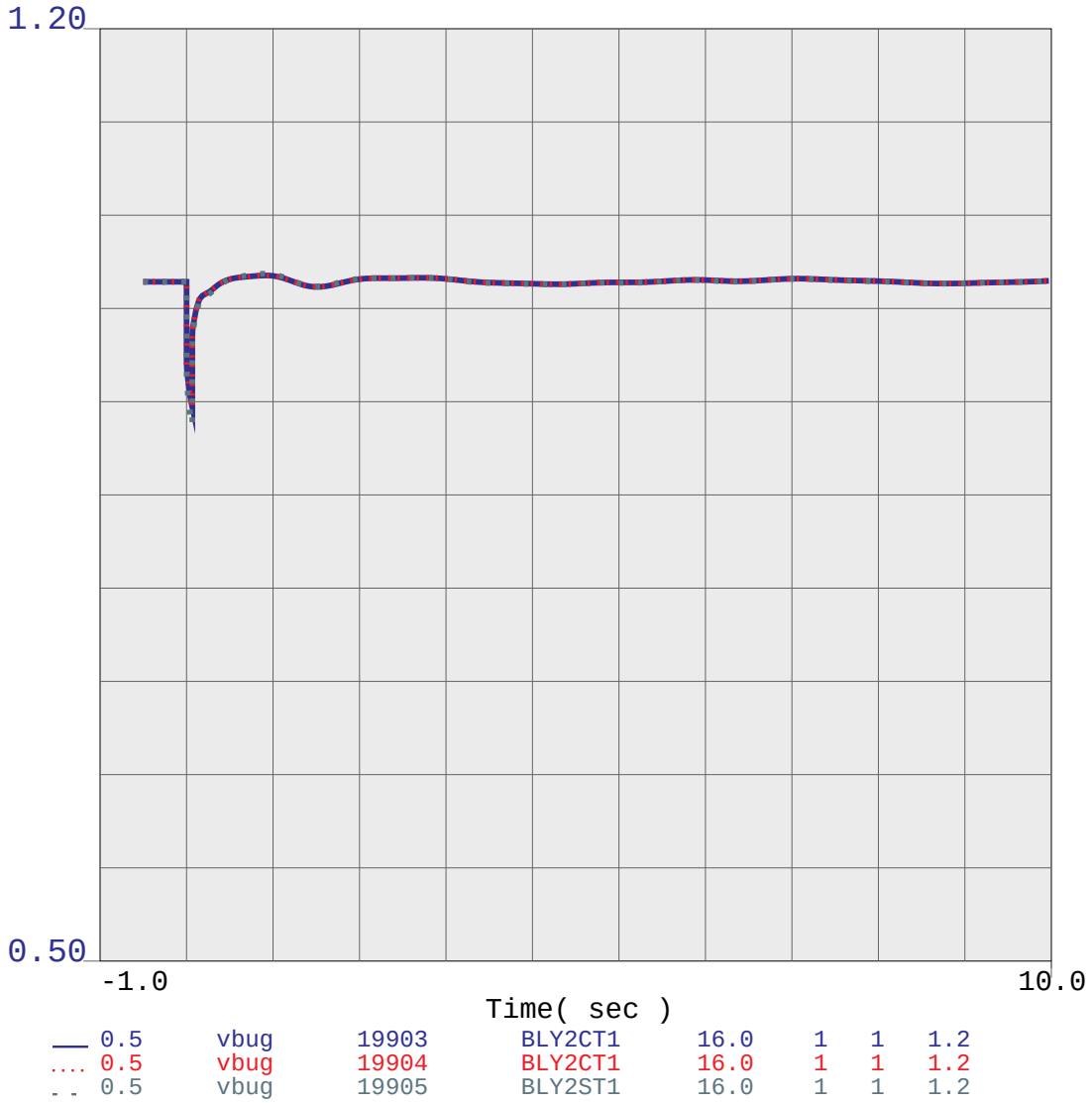

beppostprojectwdpv2stability_Deversmidptcoacram-dlo
SERIES COMPENSATION 520MW INCREASE
WITH DPV2 - POST PROJECT

BVM2

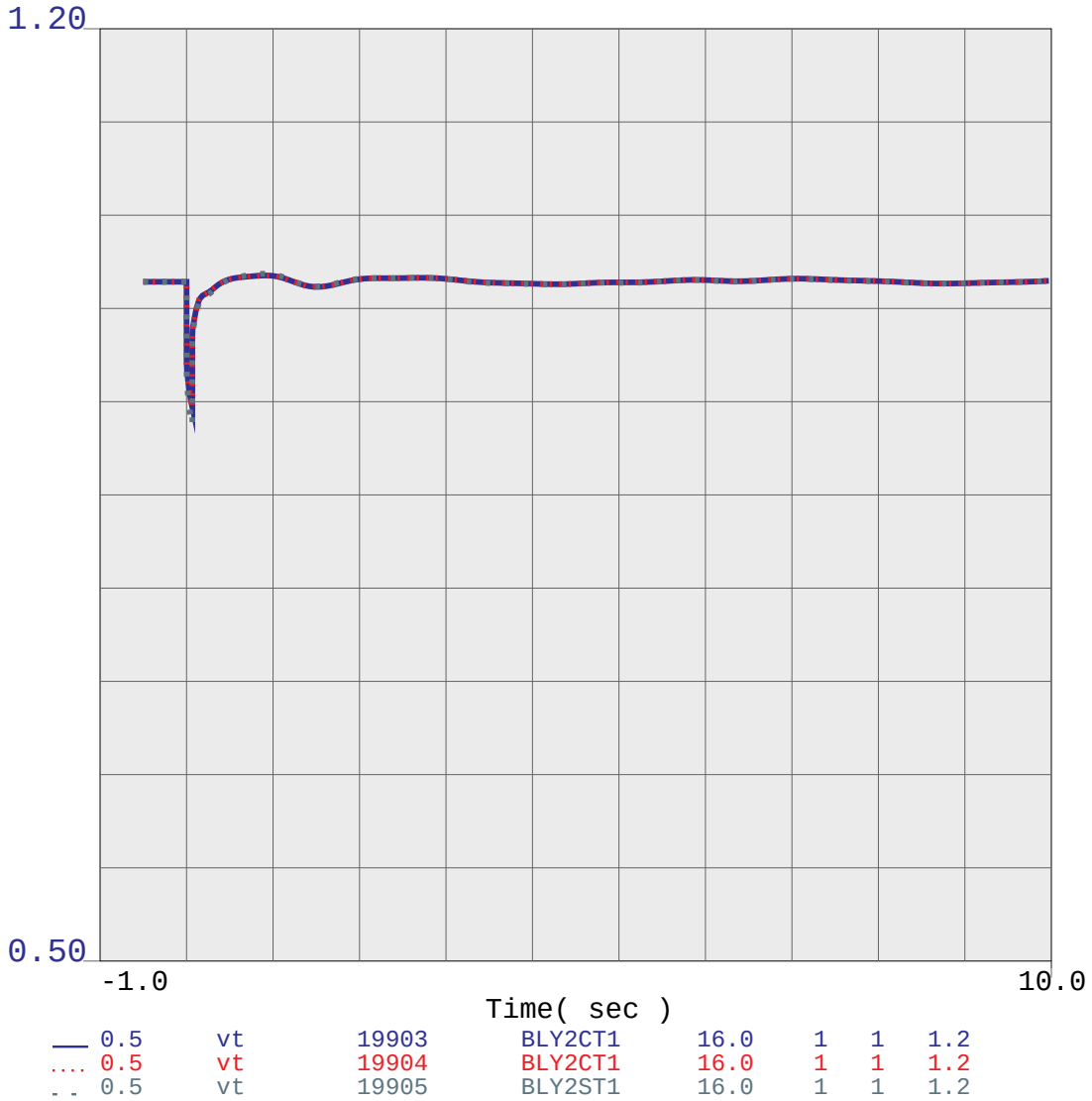

beppostprojectwdpv2stability_Deversmidptcoacram-dlo
SERIES COMPENSATION 520MW INCREASE
WITH DPV2 - POST PROJECT

BVM2

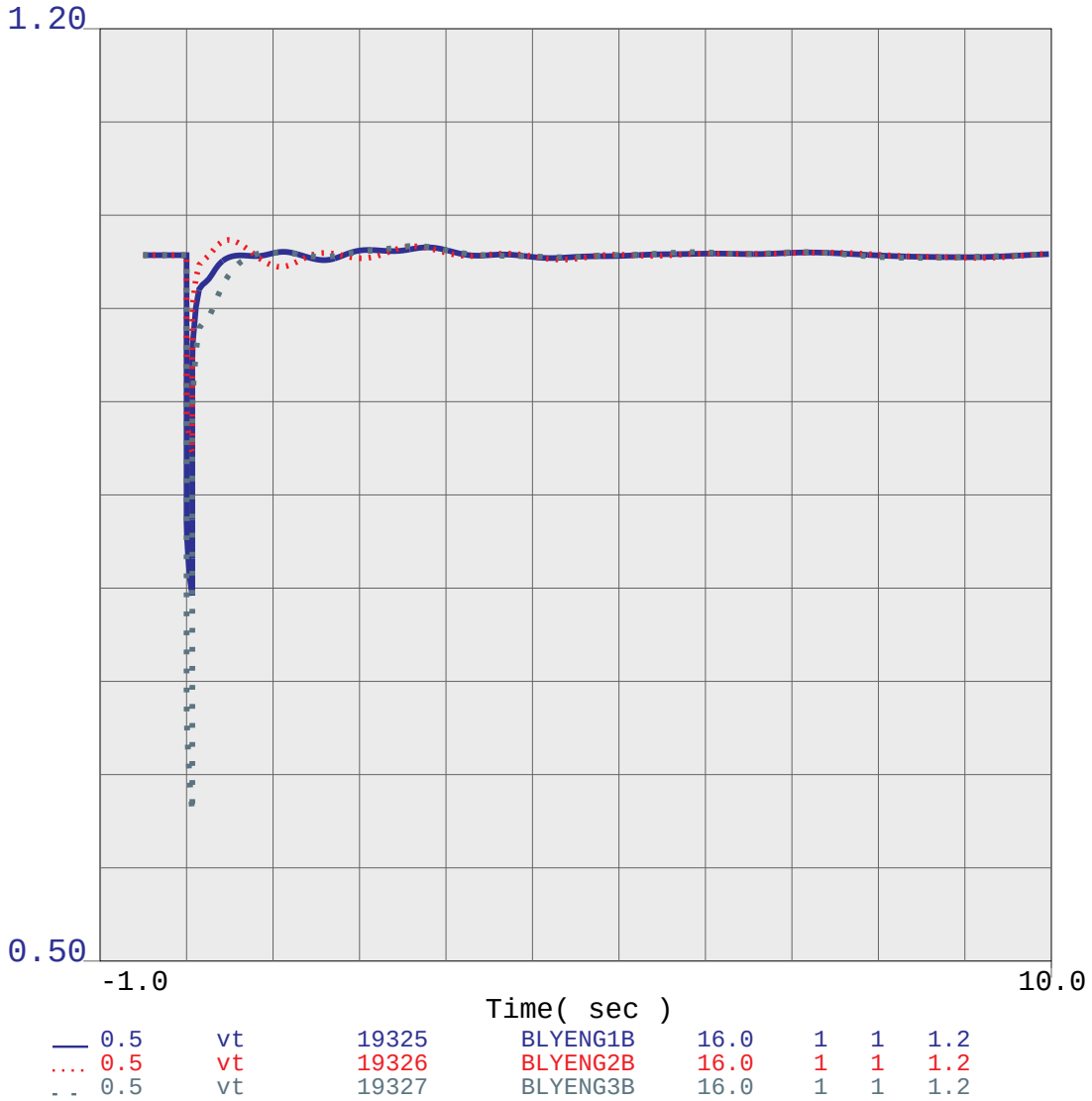

beppostprojectwdpv2stability_Deversmidptcoacram-dlo
SERIES COMPENSATION 520MW INCREASE
WITH DPV2 - POST PROJECT

BVM2

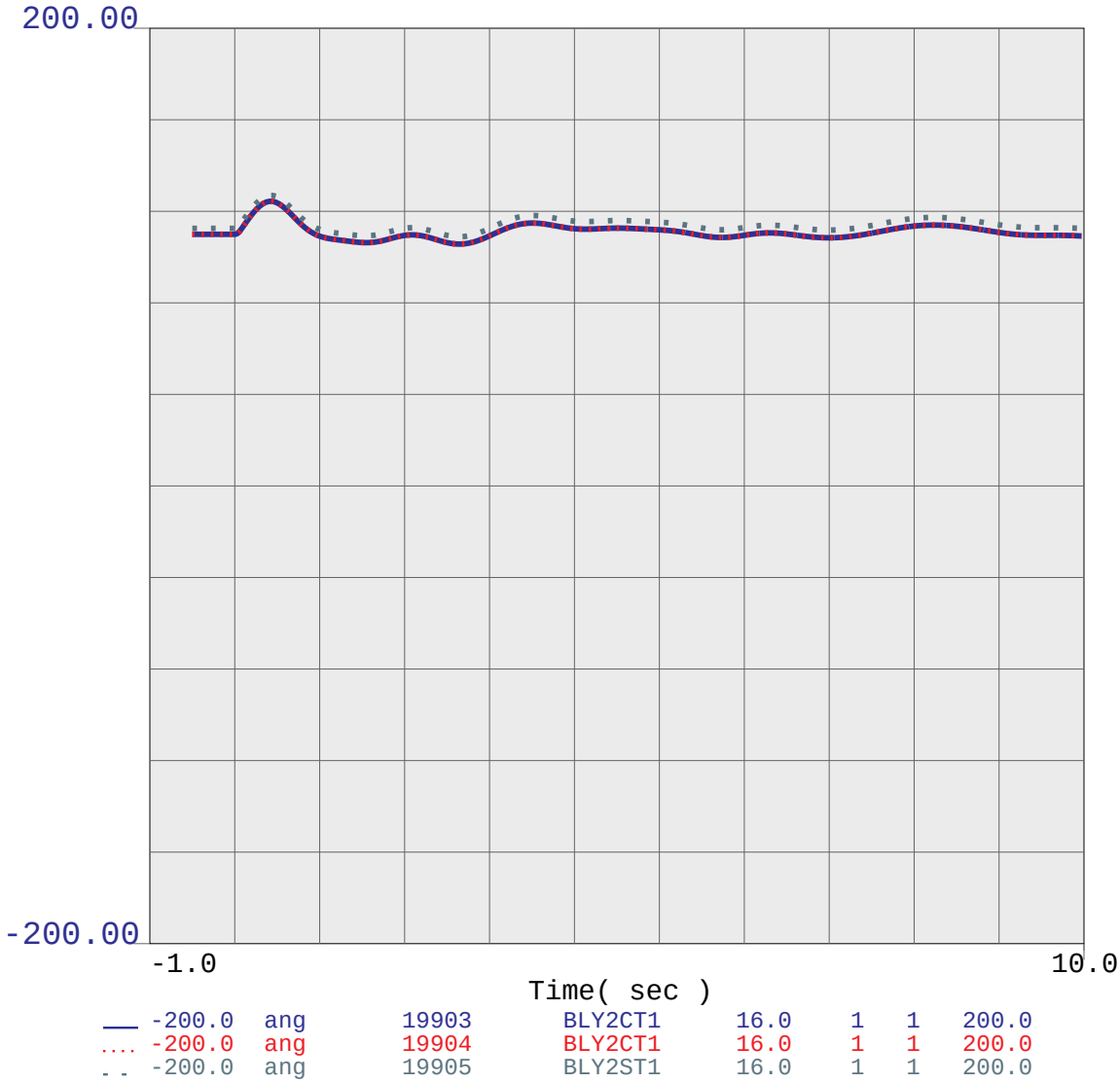

beppostprojectwdpv2stability_Deversmidptcoacram-dlo
SERIES COMPENSATION 520MW INCREASE
WITH DPV2 - POST PROJECT

BVM2

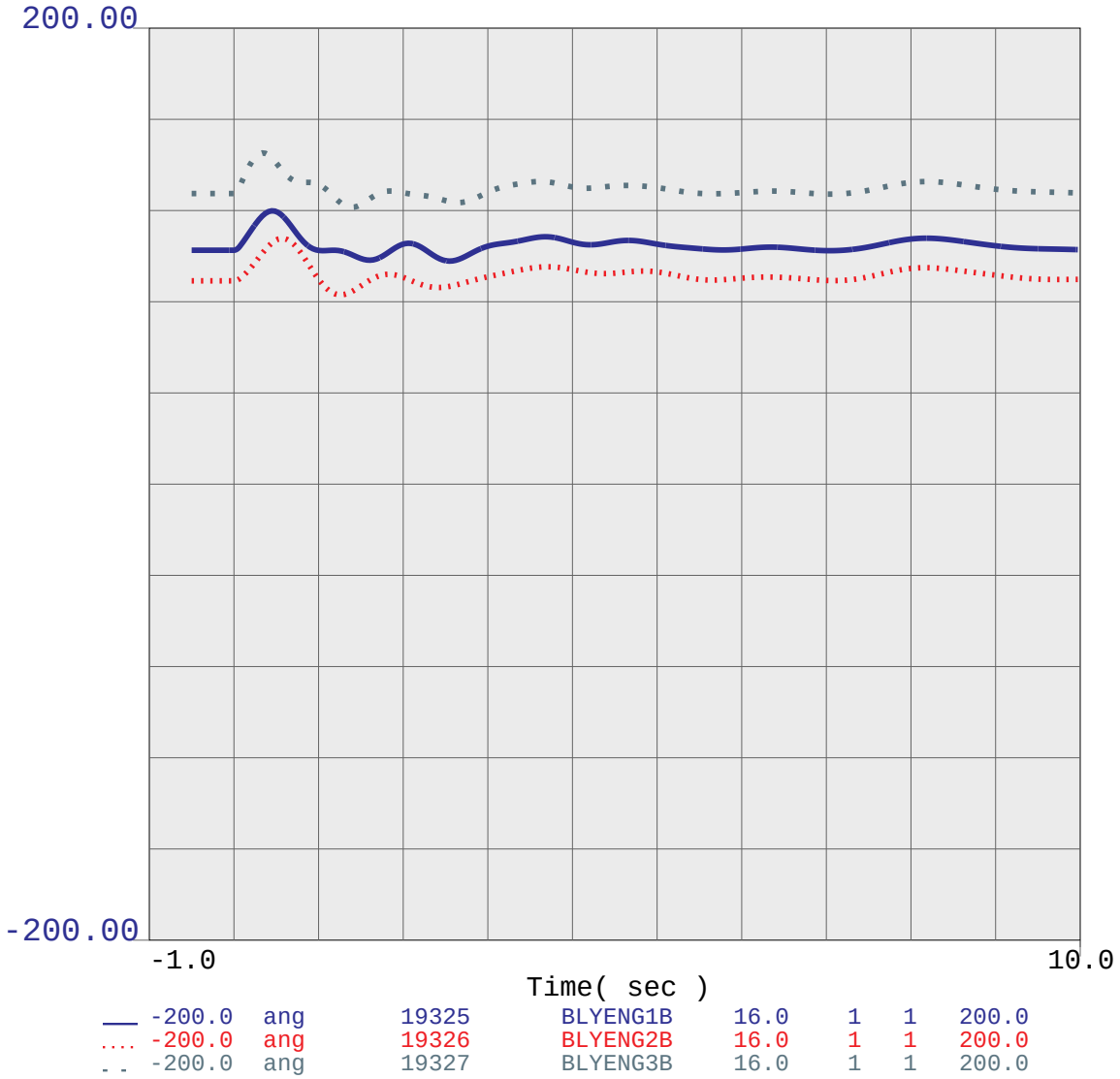

beppostprojectwdpv2stability_Deversmidptcoacram-dlo
SERIES COMPENSATION 520MW INCREASE
WITH DPV2 - POST PROJECT

BVM1

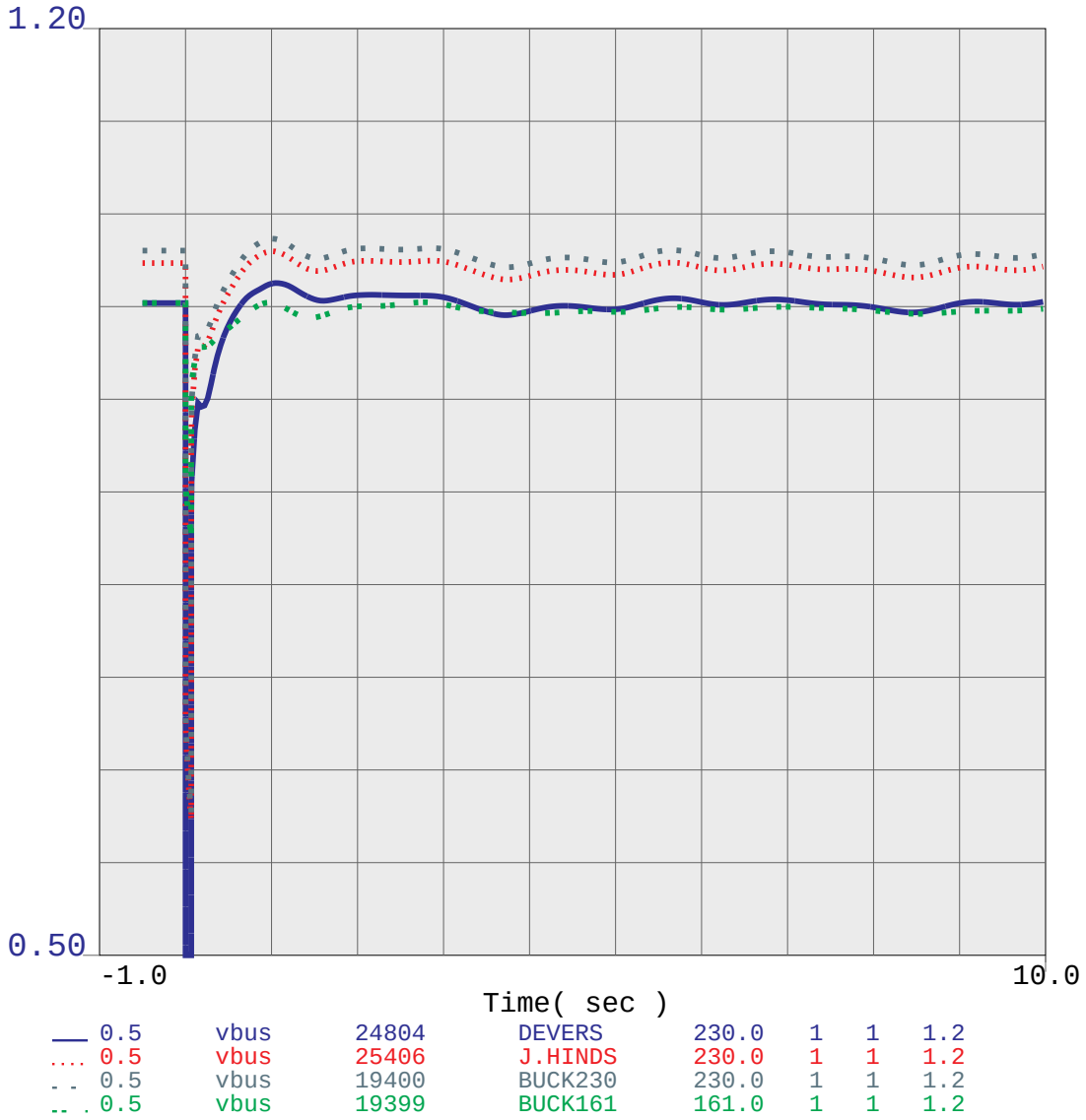

beppostprojectwdpv2stability_Deversmidpt-palomidpt-dlo
SERIES COMPENSATION 520MW INCREASE
WITH DPV2 - POST PROJECT

BVM2

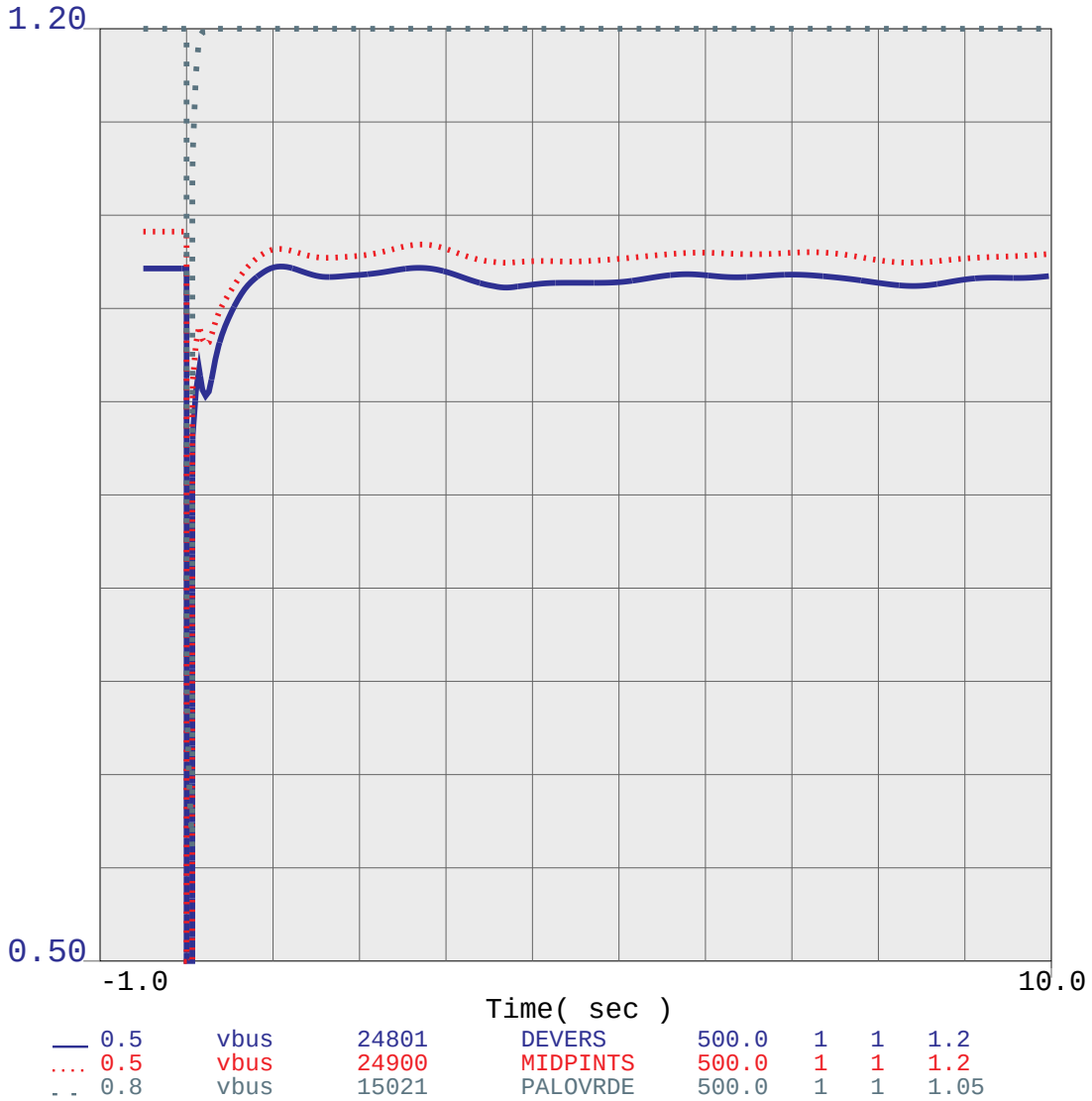

beppostprojectwdpv2stability_Deversmidpt-palomidpt-dlo
SERIES COMPENSATION 520MW INCREASE
WITH DPV2 - POST PROJECT

BVM2

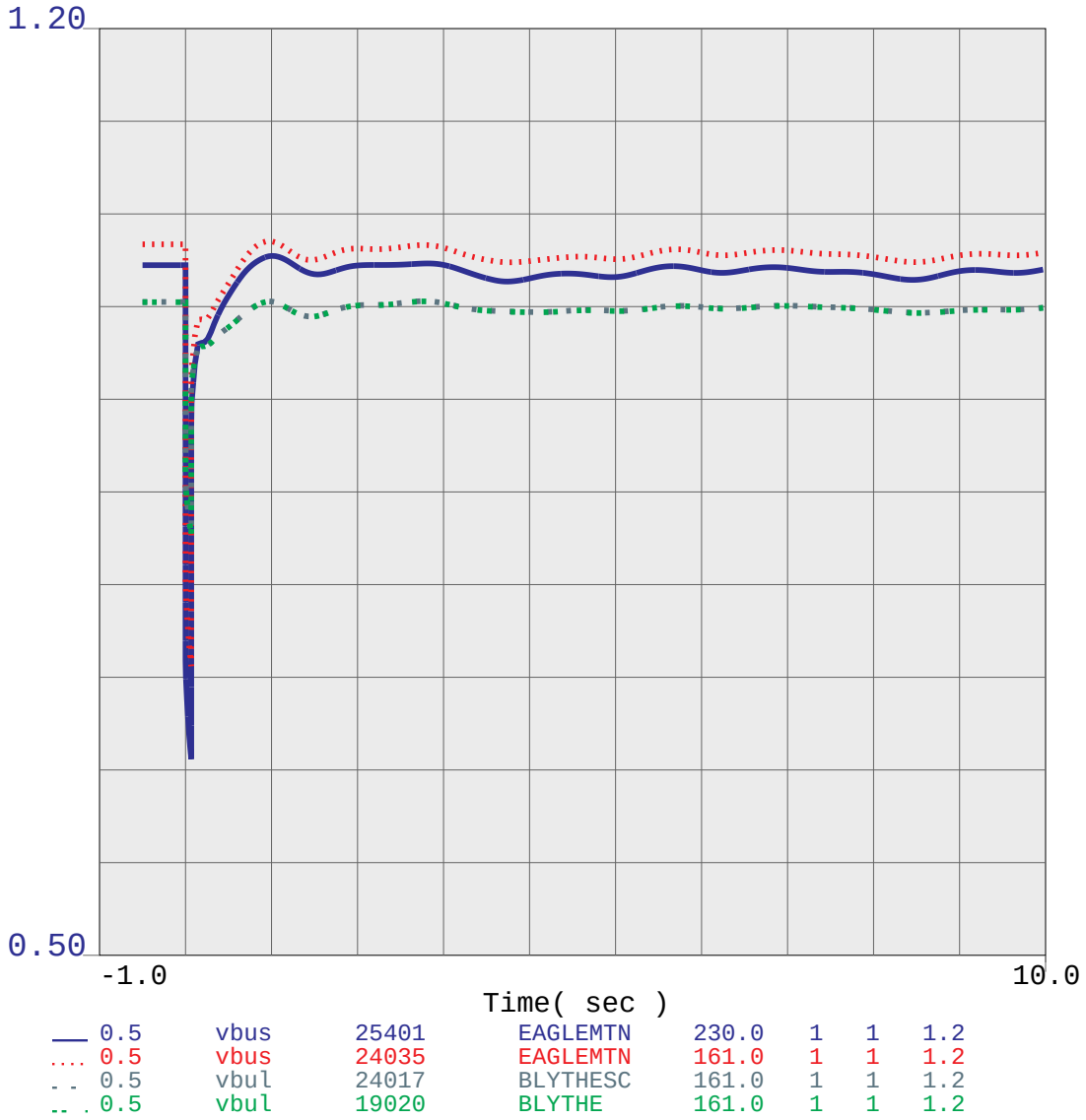

beppostprojectwdpv2stability_Deversmidpt-palomidpt-dlo
SERIES COMPENSATION 520MW INCREASE
WITH DPV2 - POST PROJECT

BVM2

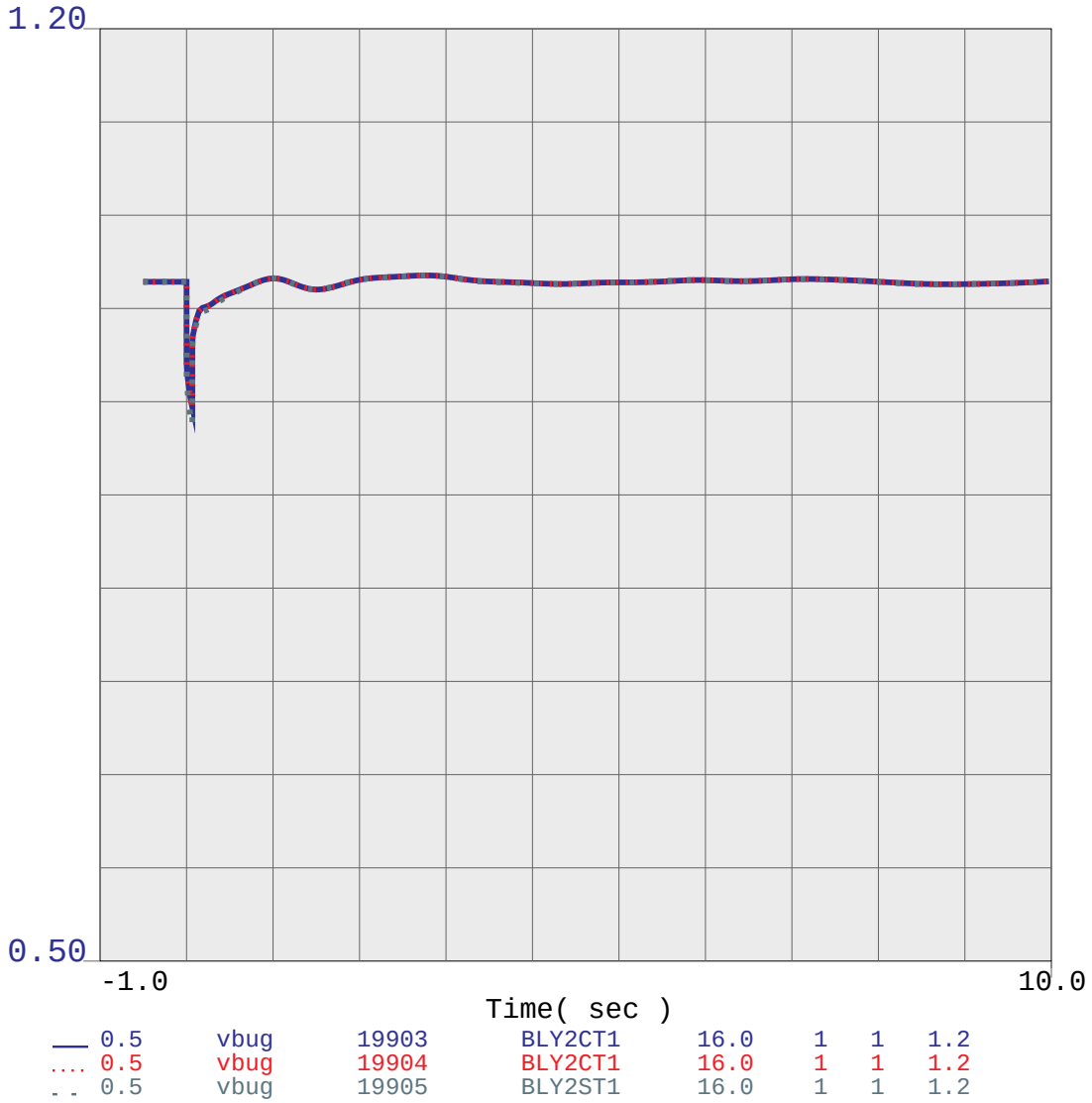

beppostprojectwdpv2stability_Deversmidpt-palomidpt-dlo
SERIES COMPENSATION 520MW INCREASE
WITH DPV2 - POST PROJECT

BVM2

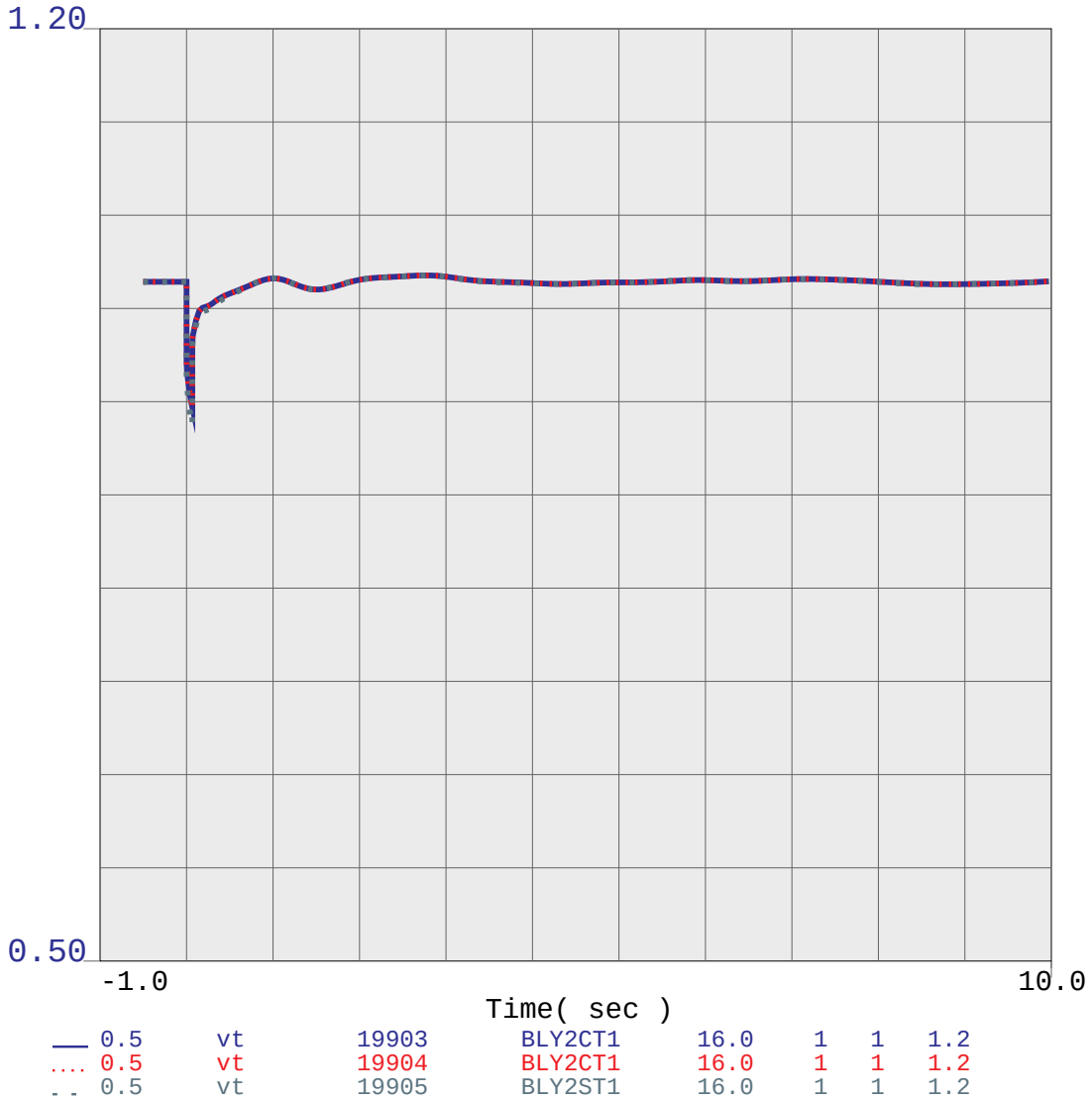

beppostprojectwdpv2stability_Deversmidpt-palomidpt-dlo
SERIES COMPENSATION 520MW INCREASE
WITH DPV2 - POST PROJECT

BVM2

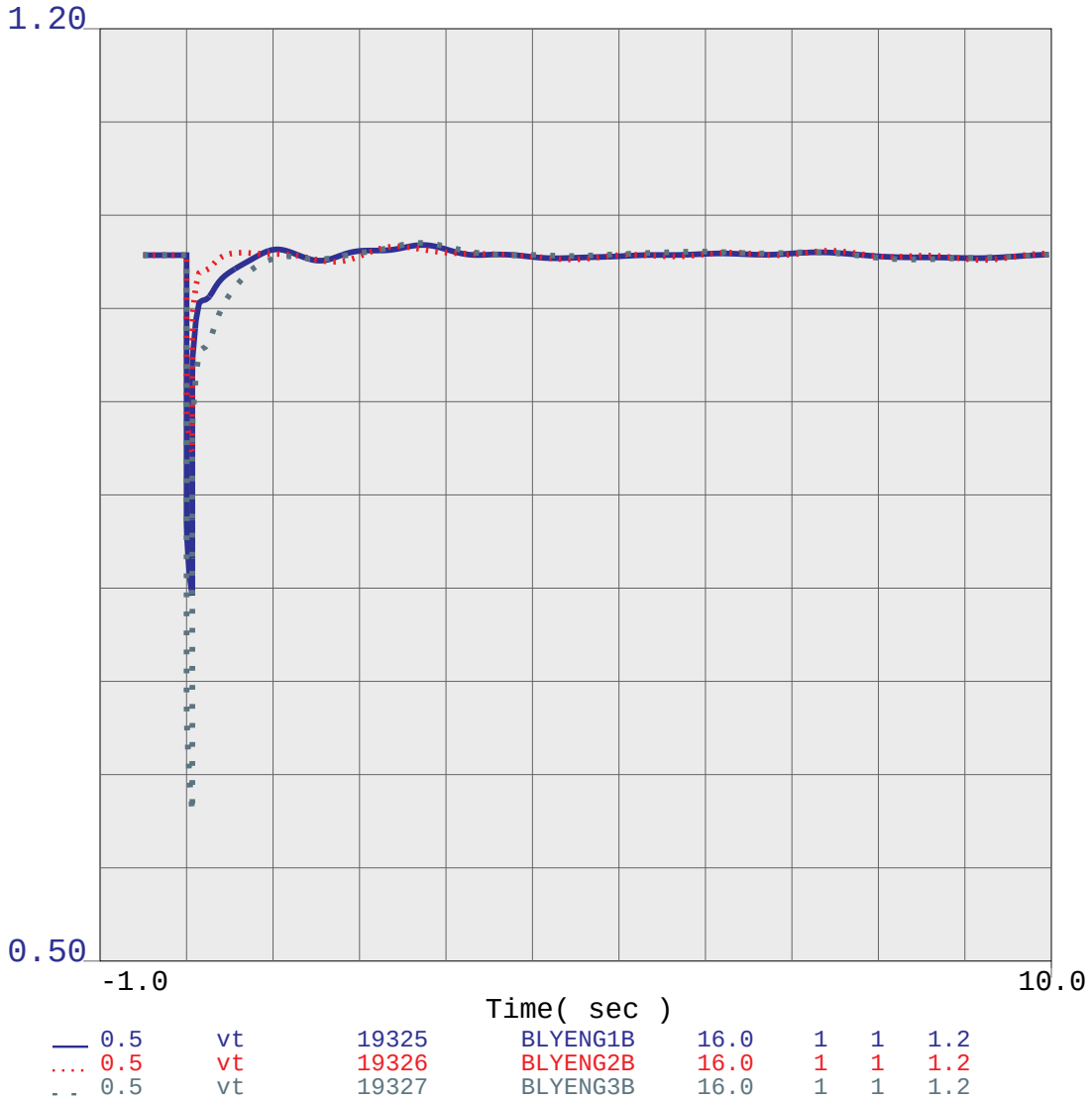

beppostprojectwdpv2stability_Deversmidpt-palomidpt-dlo
SERIES COMPENSATION 520MW INCREASE
WITH DPV2 - POST PROJECT

BVM2

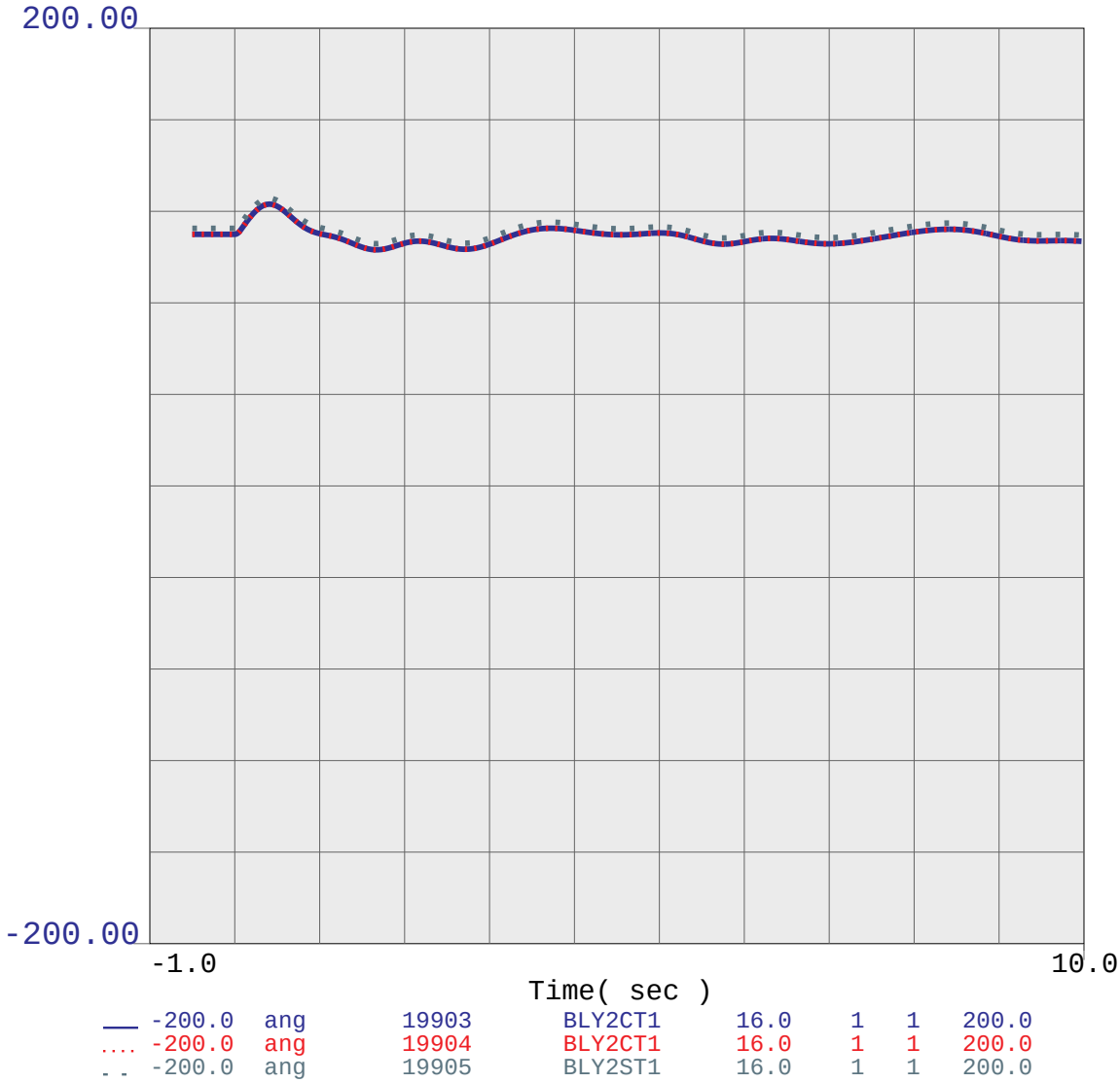

beppostprojectwdpv2stability_Deversmidpt-palomidpt-dlo
SERIES COMPENSATION 520MW INCREASE
WITH DPV2 - POST PROJECT

BVM2

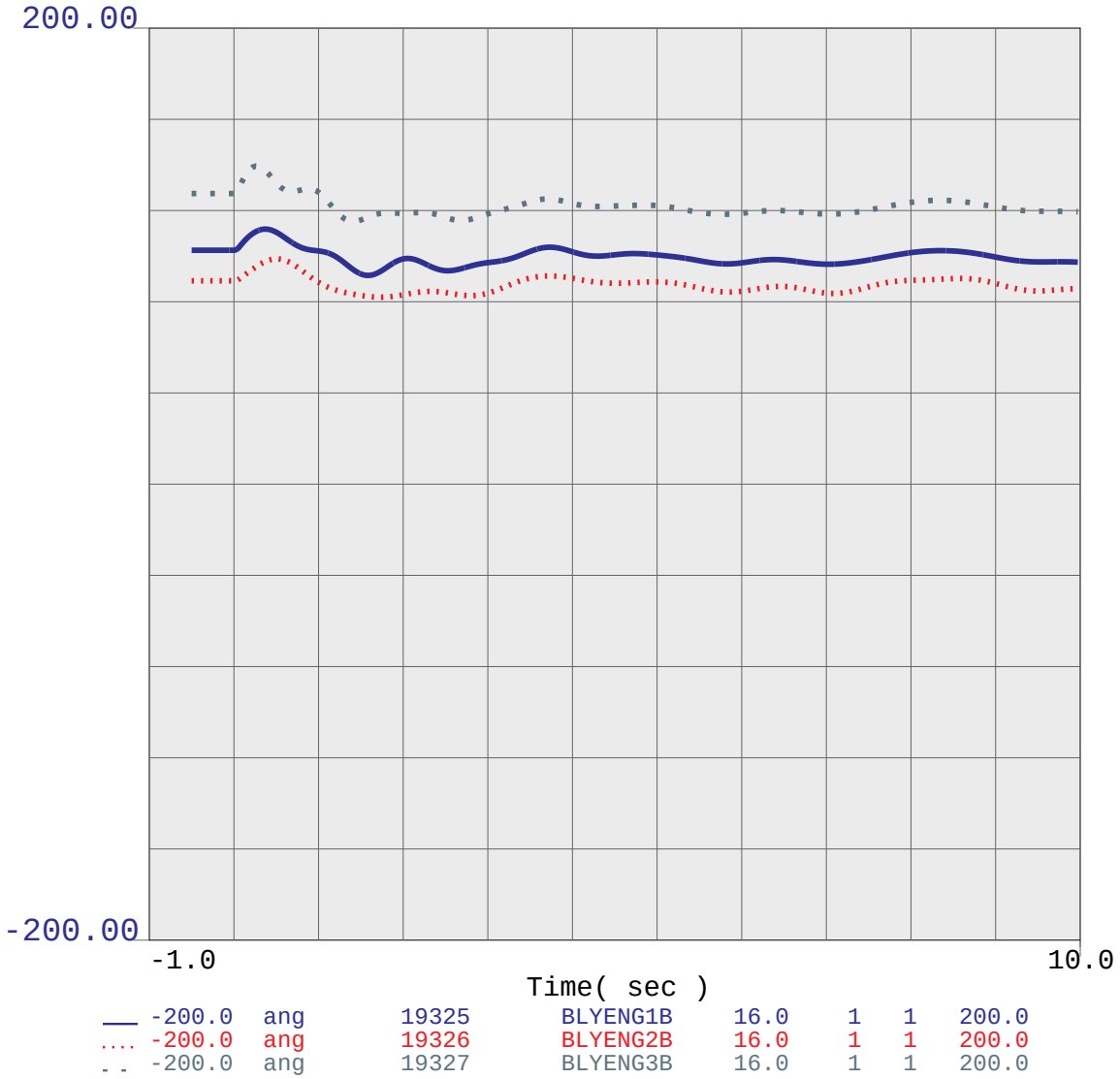

beppostprojectwdpv2stability_Deversmidpt-palomidpt-dlo
SERIES COMPENSATION 520MW INCREASE
WITH DPV2 - POST PROJECT

BVM1

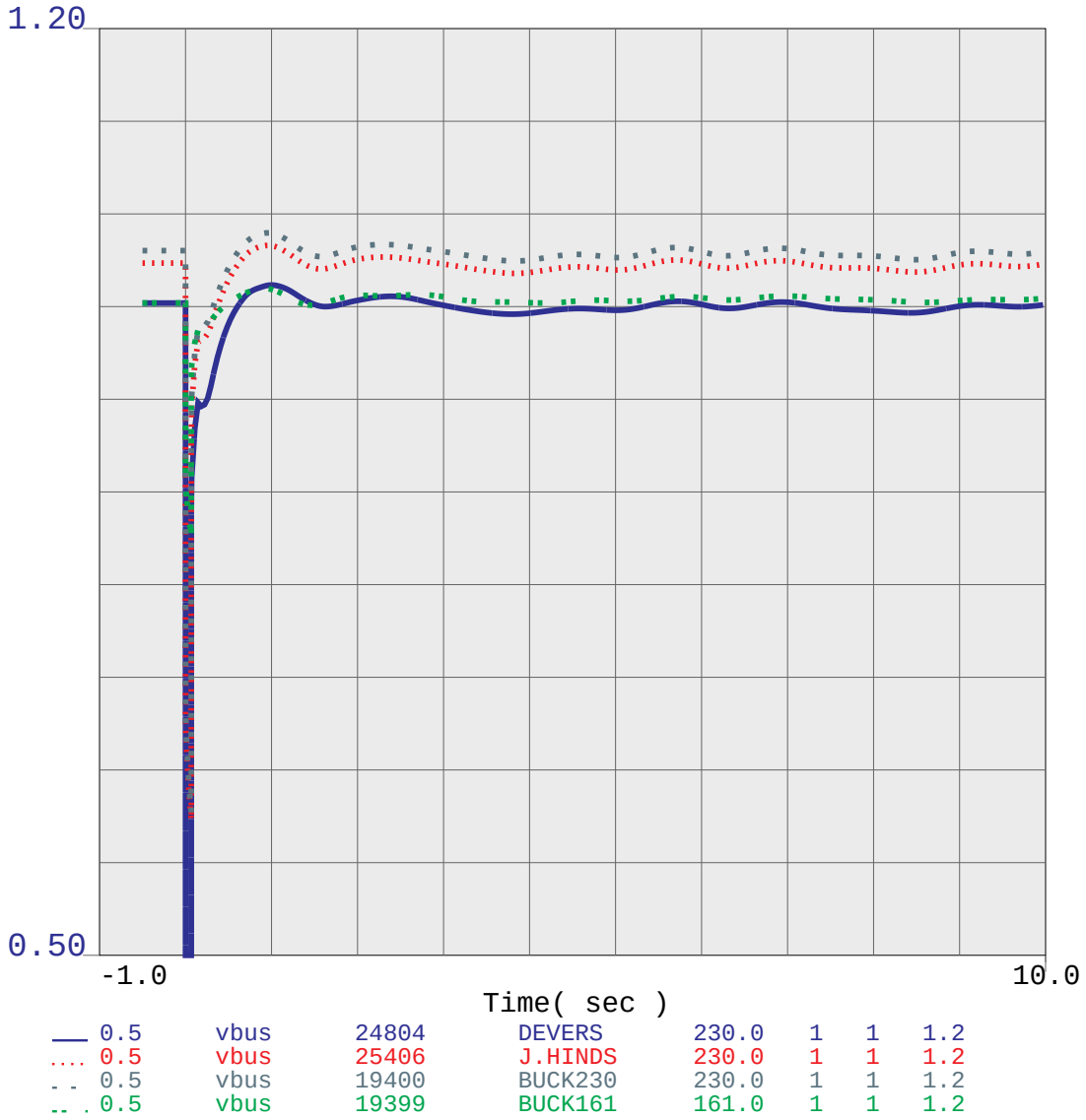

beppostprojectwdpv2stability_Deversmidpt-slo
SERIES COMPENSATION 520MW INCREASE
WITH DPV2 - POST PROJECT

BVM2

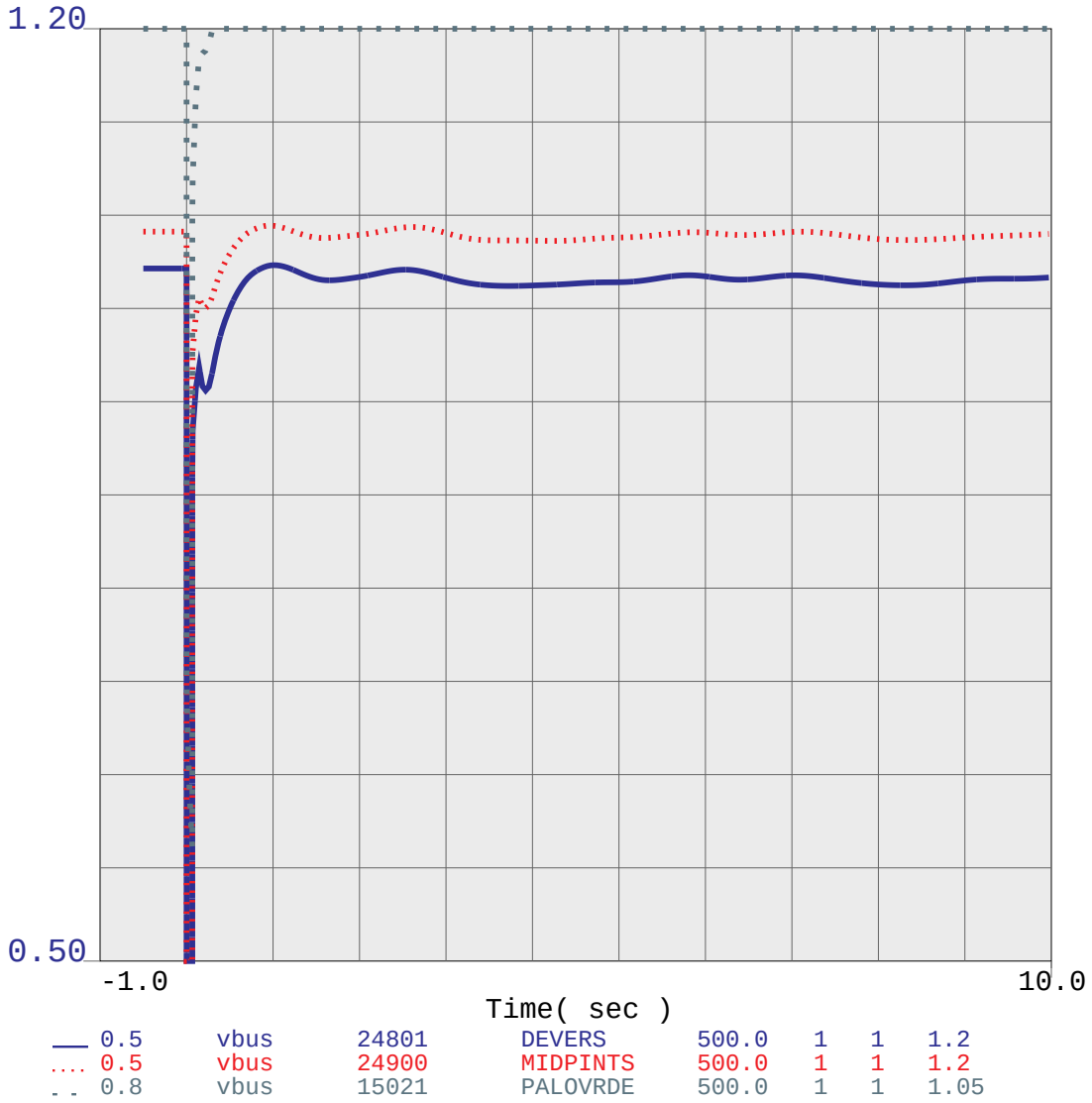

beppostprojectwdpv2stability_Deversmidpt-slo
SERIES COMPENSATION 520MW INCREASE
WITH DPV2 - POST PROJECT

BVM2

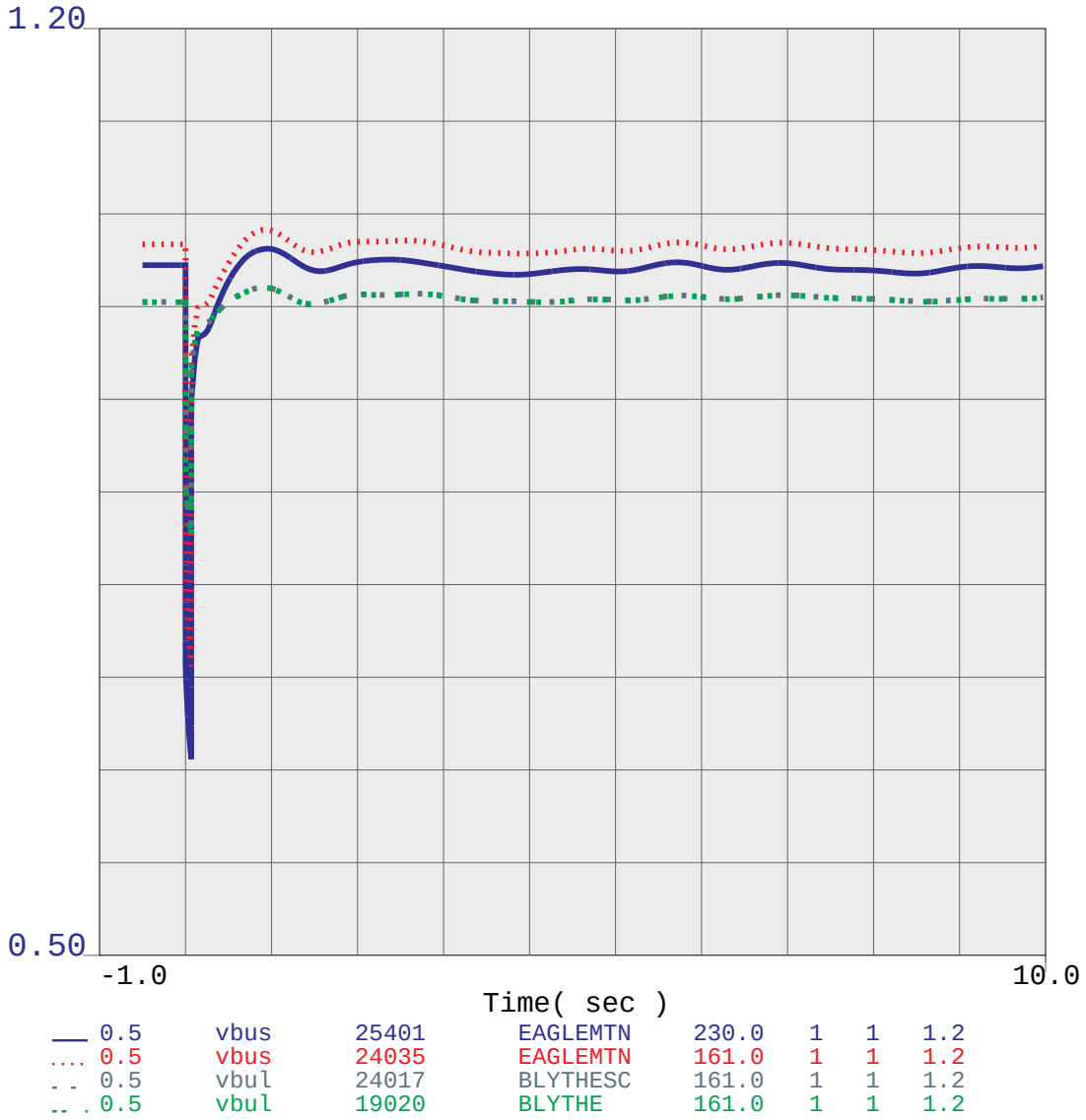

beppostprojectwdpv2stability_Deversmidpt-slo
SERIES COMPENSATION 520MW INCREASE
WITH DPV2 - POST PROJECT

BVM2

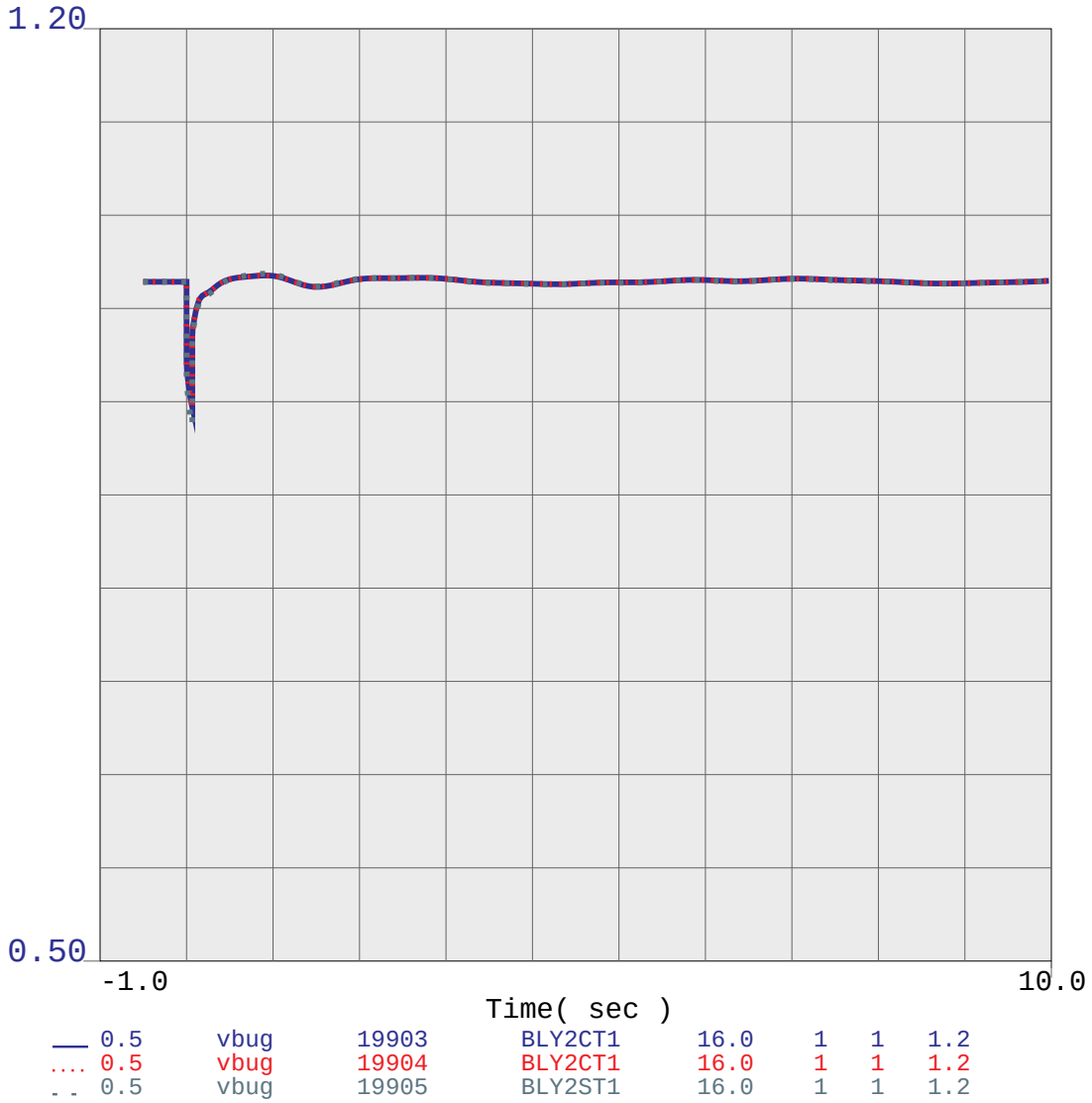

beppostprojectwdpv2stability_Deversmidpt-slo
SERIES COMPENSATION 520MW INCREASE
WITH DPV2 - POST PROJECT

BVM2

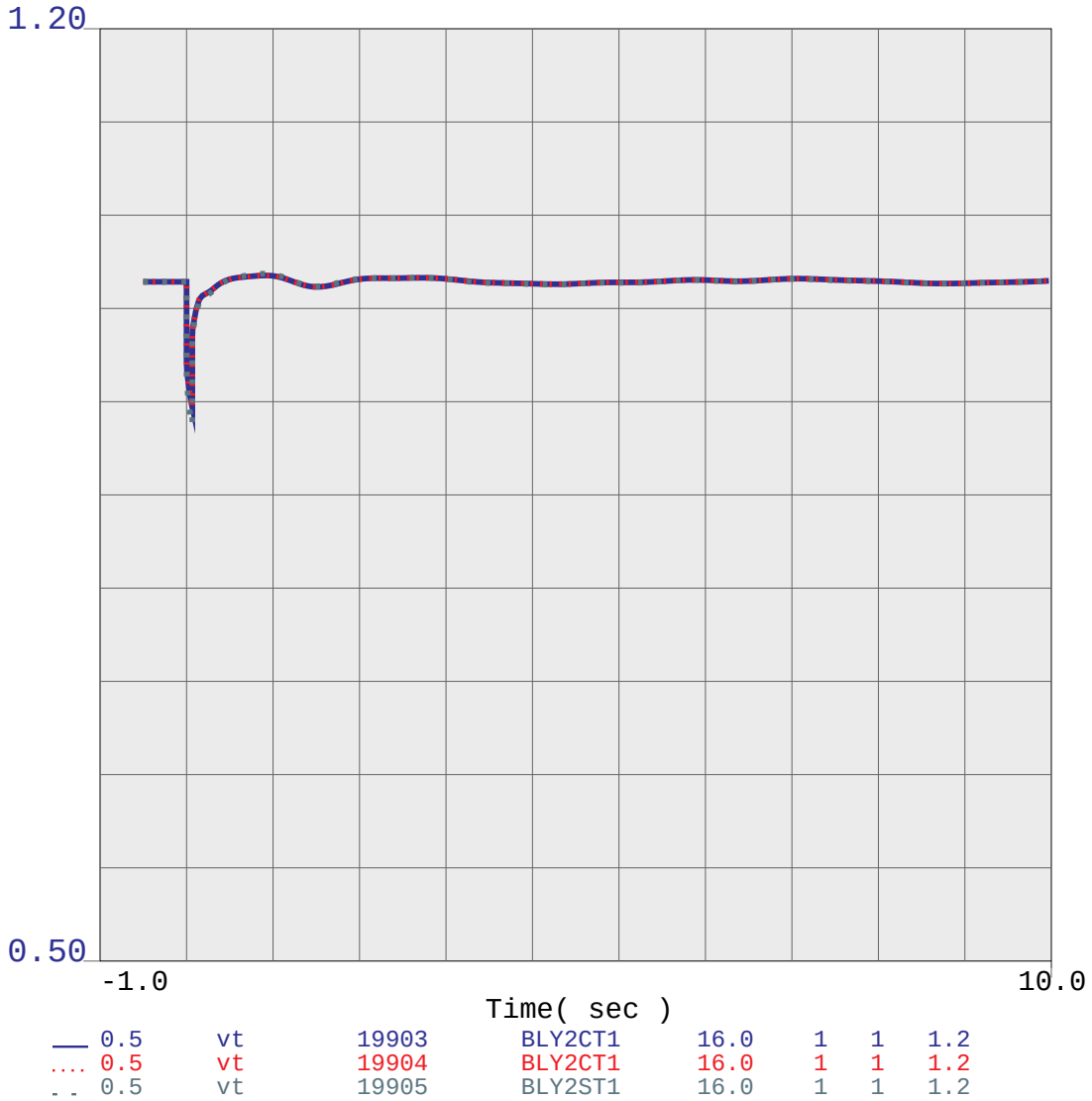

beppostprojectwdpv2stability_Deversmidpt-slo
SERIES COMPENSATION 520MW INCREASE
WITH DPV2 - POST PROJECT

BVM2

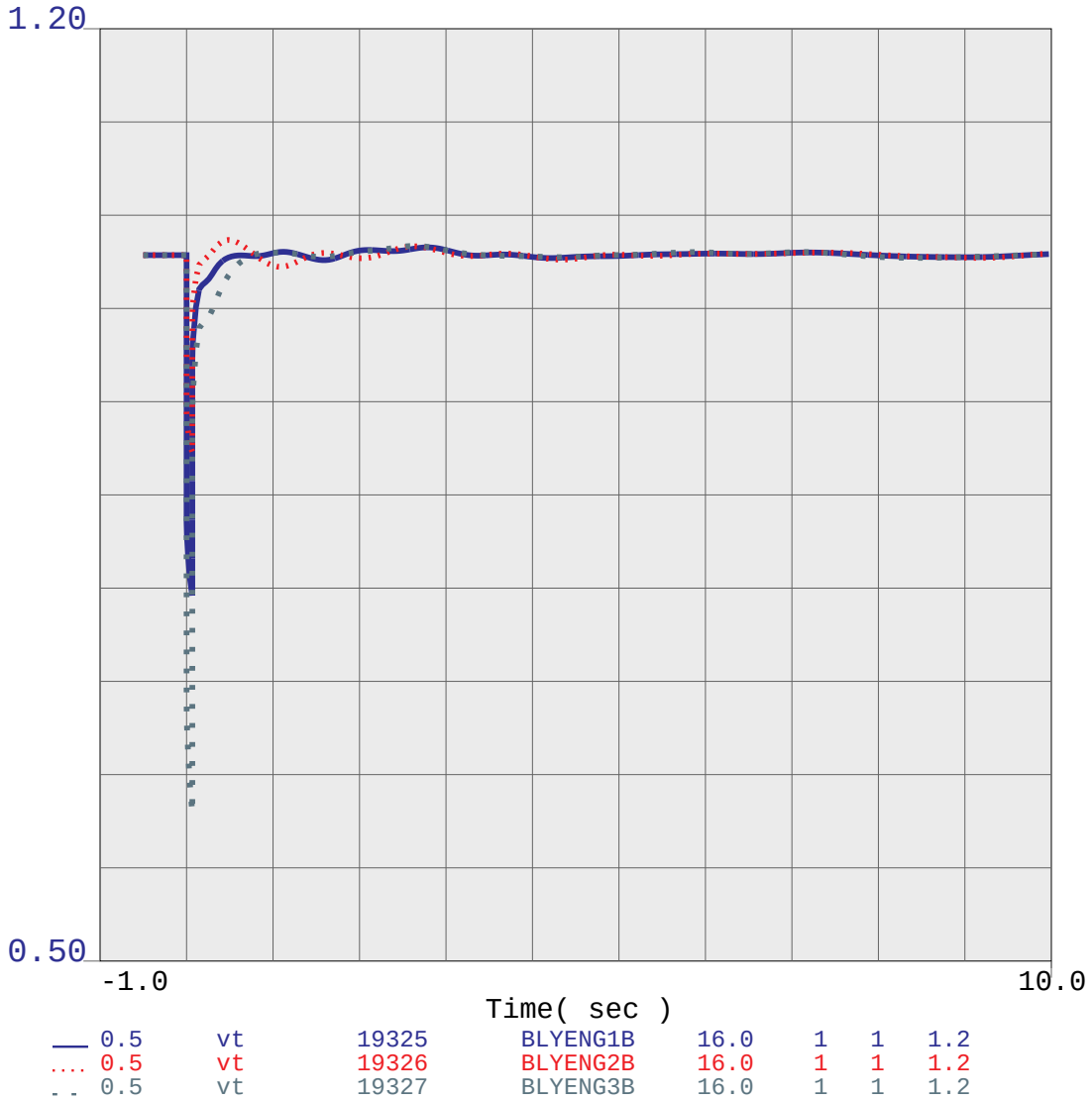

beppostprojectwdpv2stability_Deversmidpt-slo
SERIES COMPENSATION 520MW INCREASE
WITH DPV2 - POST PROJECT

BVM2

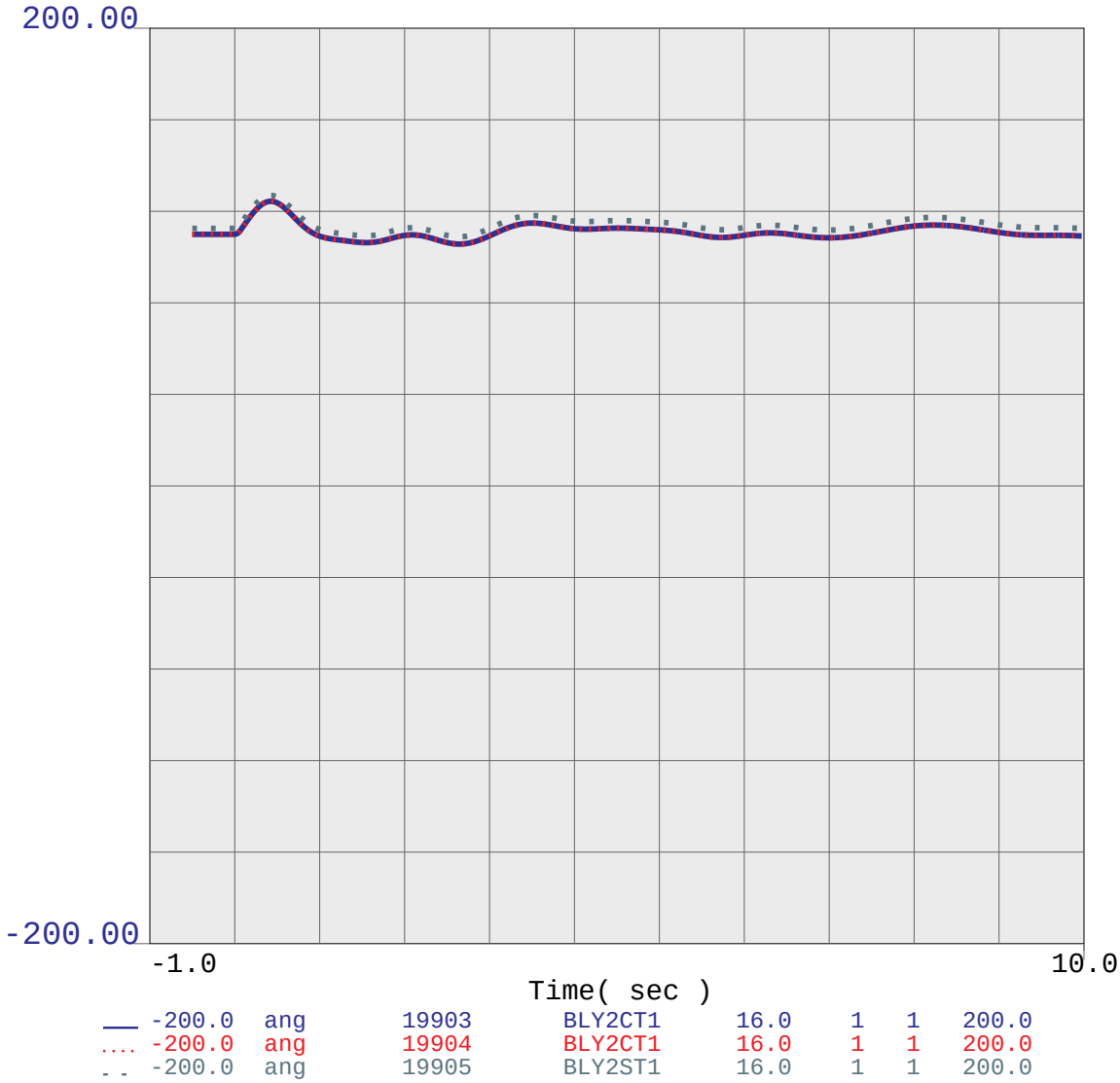

beppostprojectwdpv2stability_Deversmidpt-slo
SERIES COMPENSATION 520MW INCREASE
WITH DPV2 - POST PROJECT

BVM2

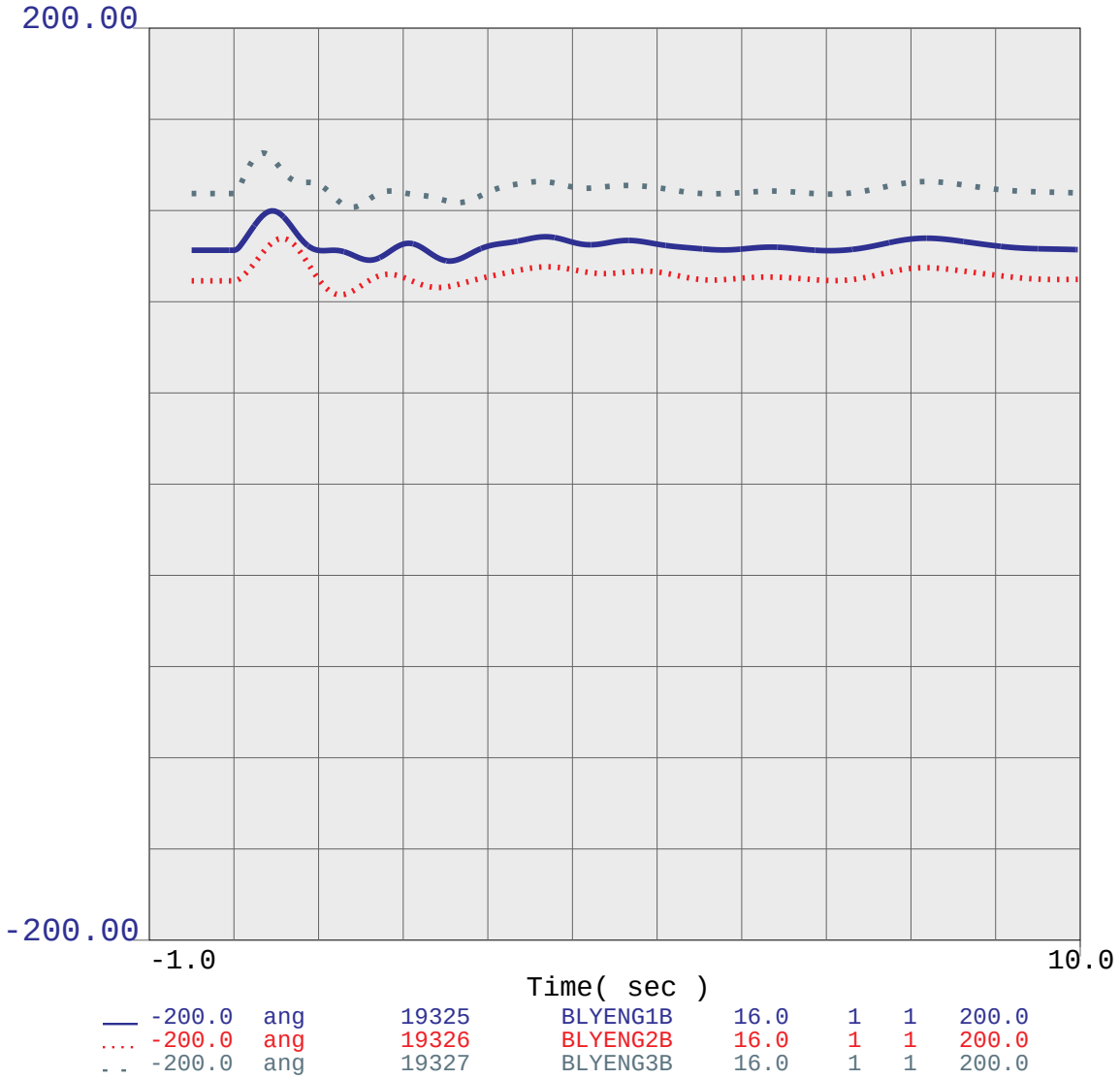

beppostprojectwdpv2stability_Deversmidpt-slo
SERIES COMPENSATION 520MW INCREASE
WITH DPV2 - POST PROJECT

BVM1

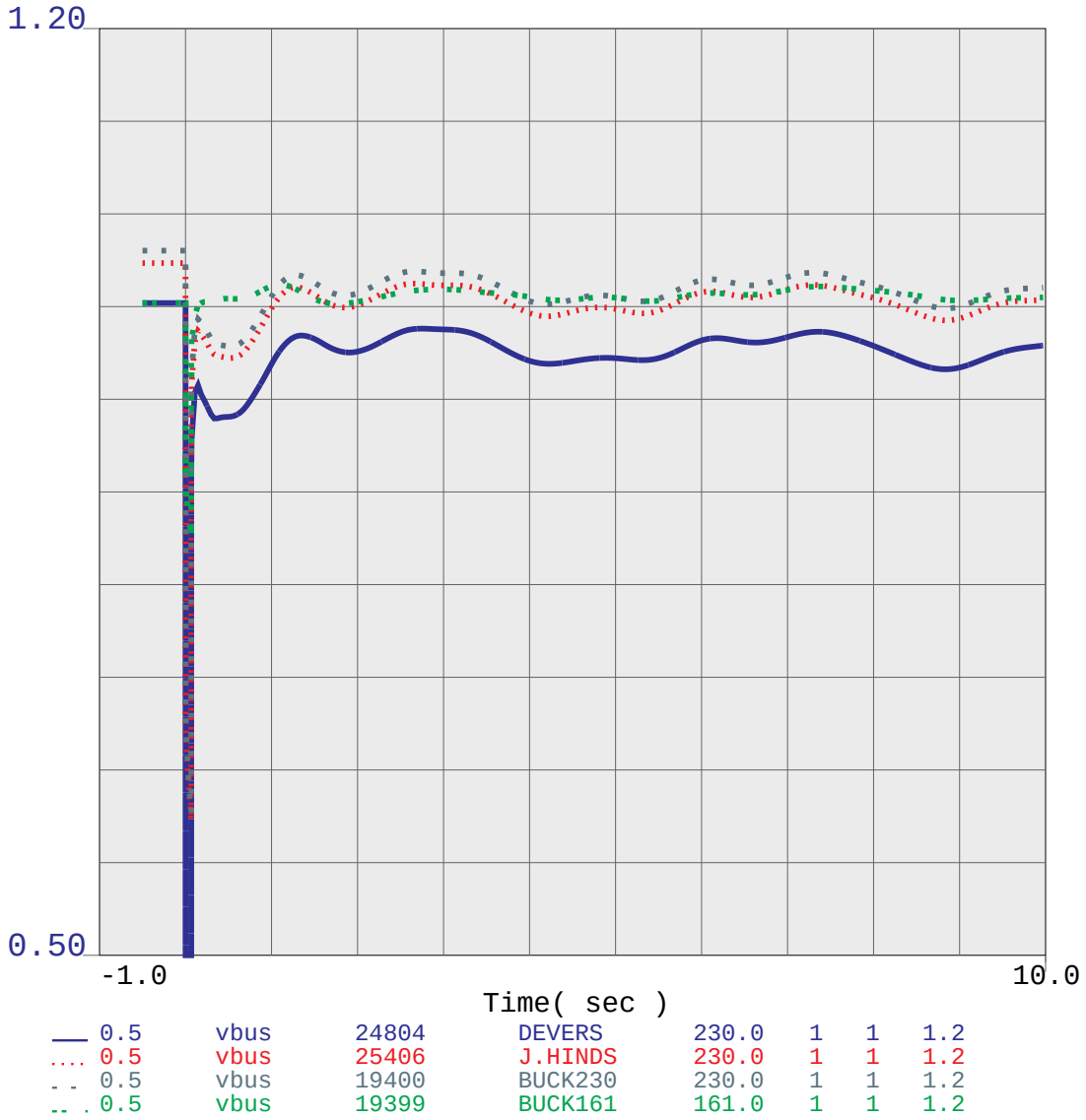

beppostprojectwdpv2stability_Devers-Valley-slo
SERIES COMPENSATION 520MW INCREASE
WITH DPV2 - POST PROJECT

BVM2

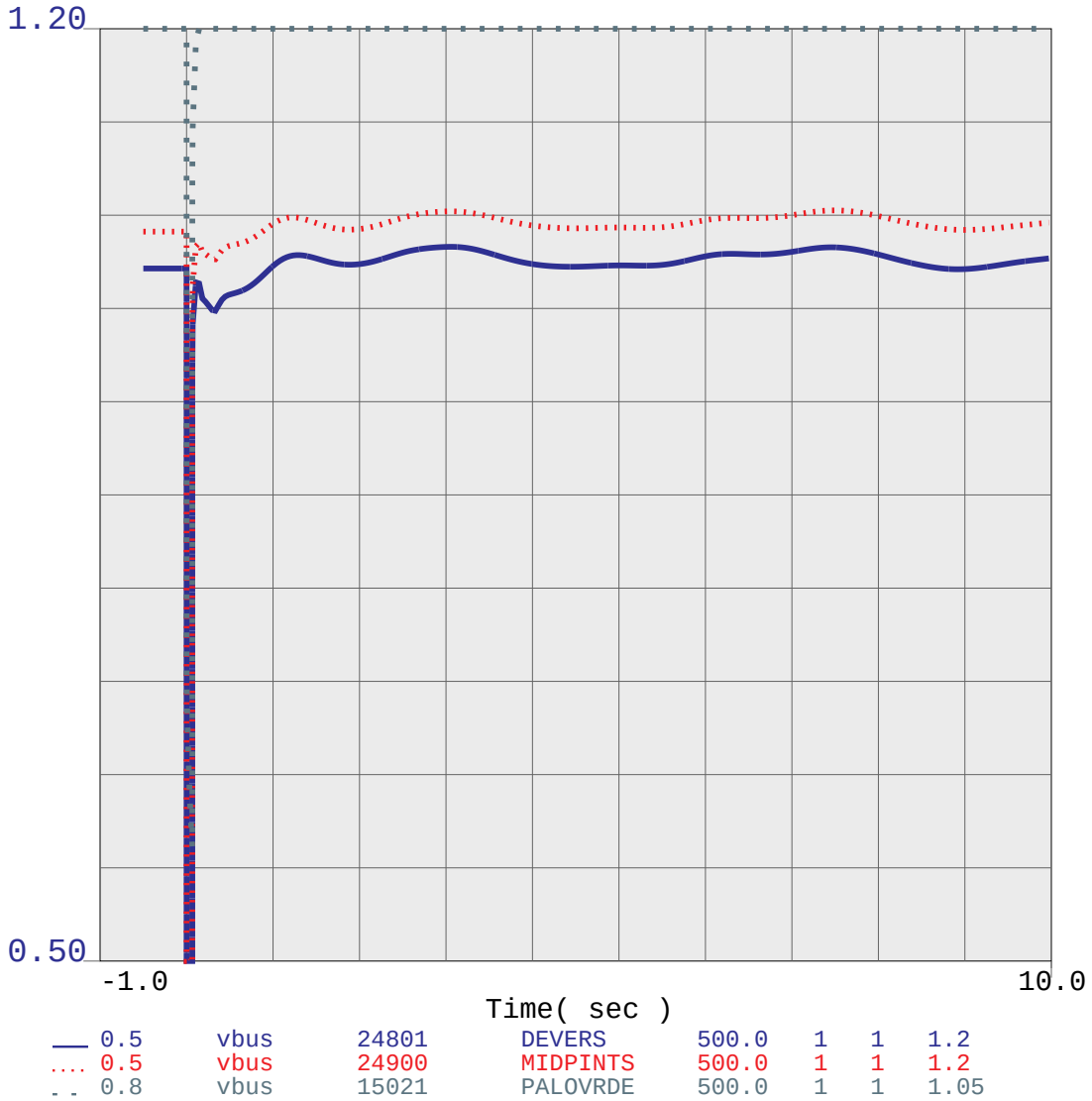

beppostprojectwdpv2stability_Devers-Valley-slo
SERIES COMPENSATION 520MW INCREASE
WITH DPV2 - POST PROJECT

BVM2

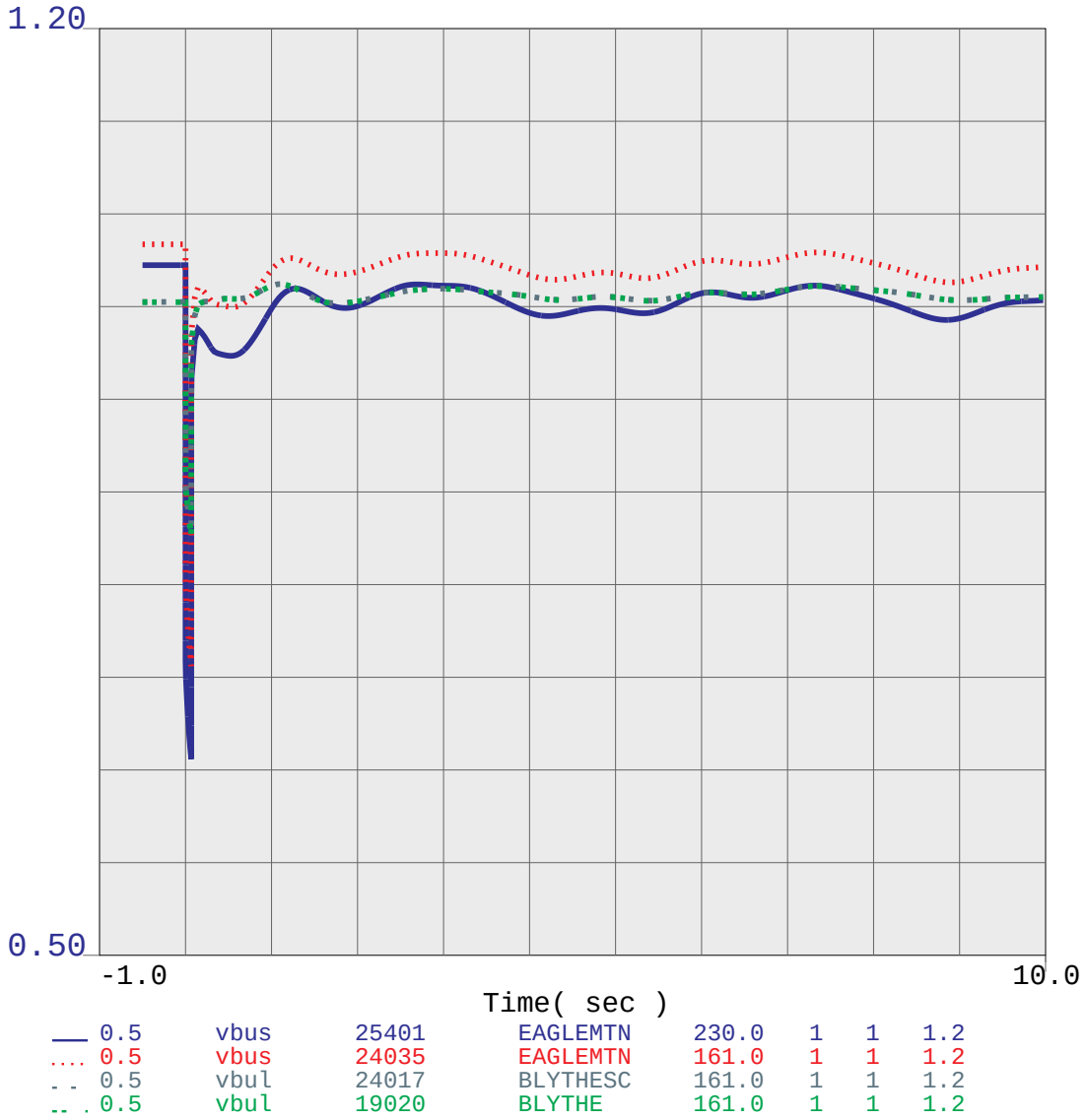

beppostprojectwdpv2stability_Devers-Valley-slo
SERIES COMPENSATION 520MW INCREASE
WITH DPV2 - POST PROJECT

BVM2

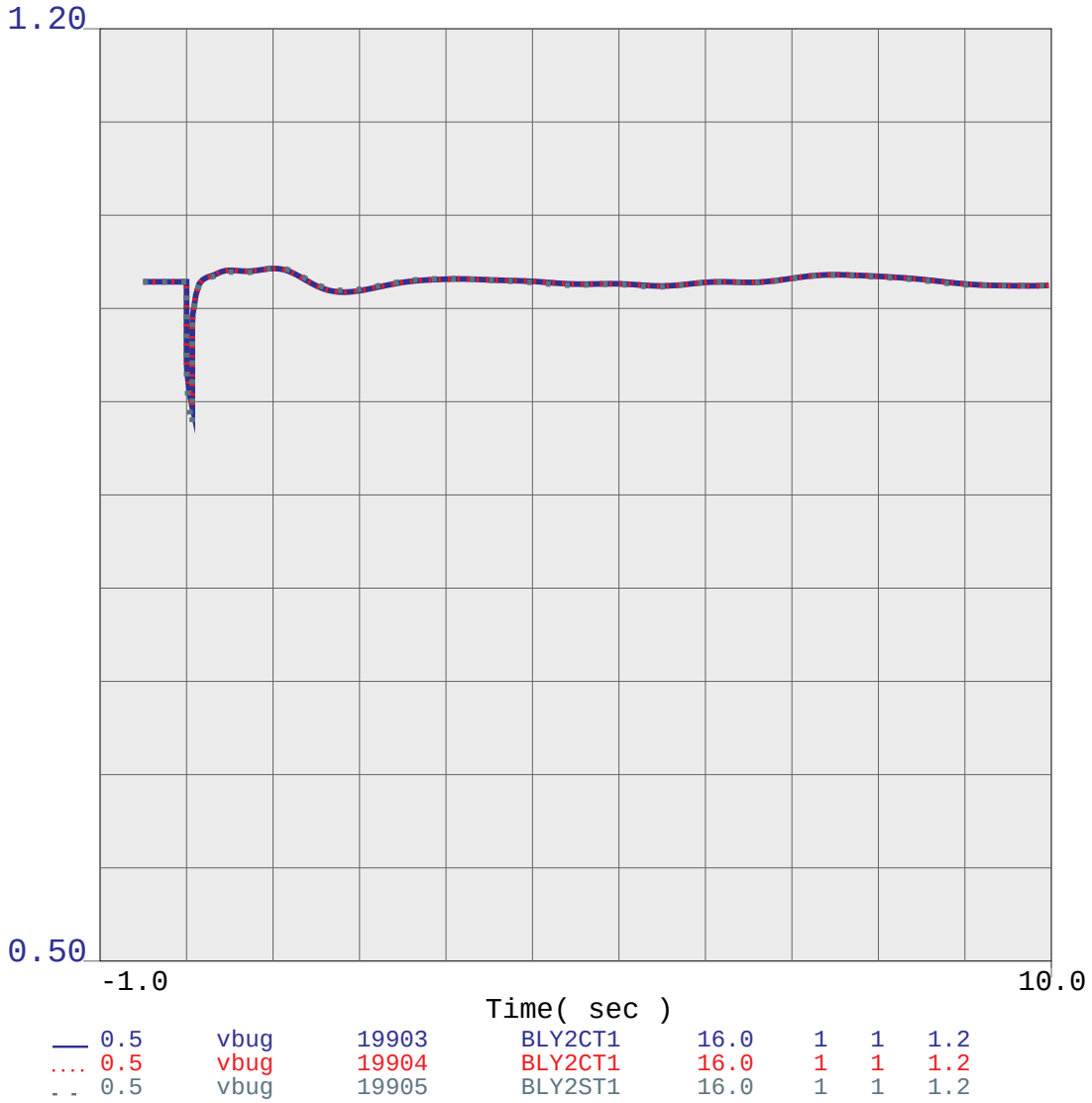

beppostprojectwdpv2stability_Devers-Valley-slo
SERIES COMPENSATION 520MW INCREASE
WITH DPV2 - POST PROJECT

BVM2

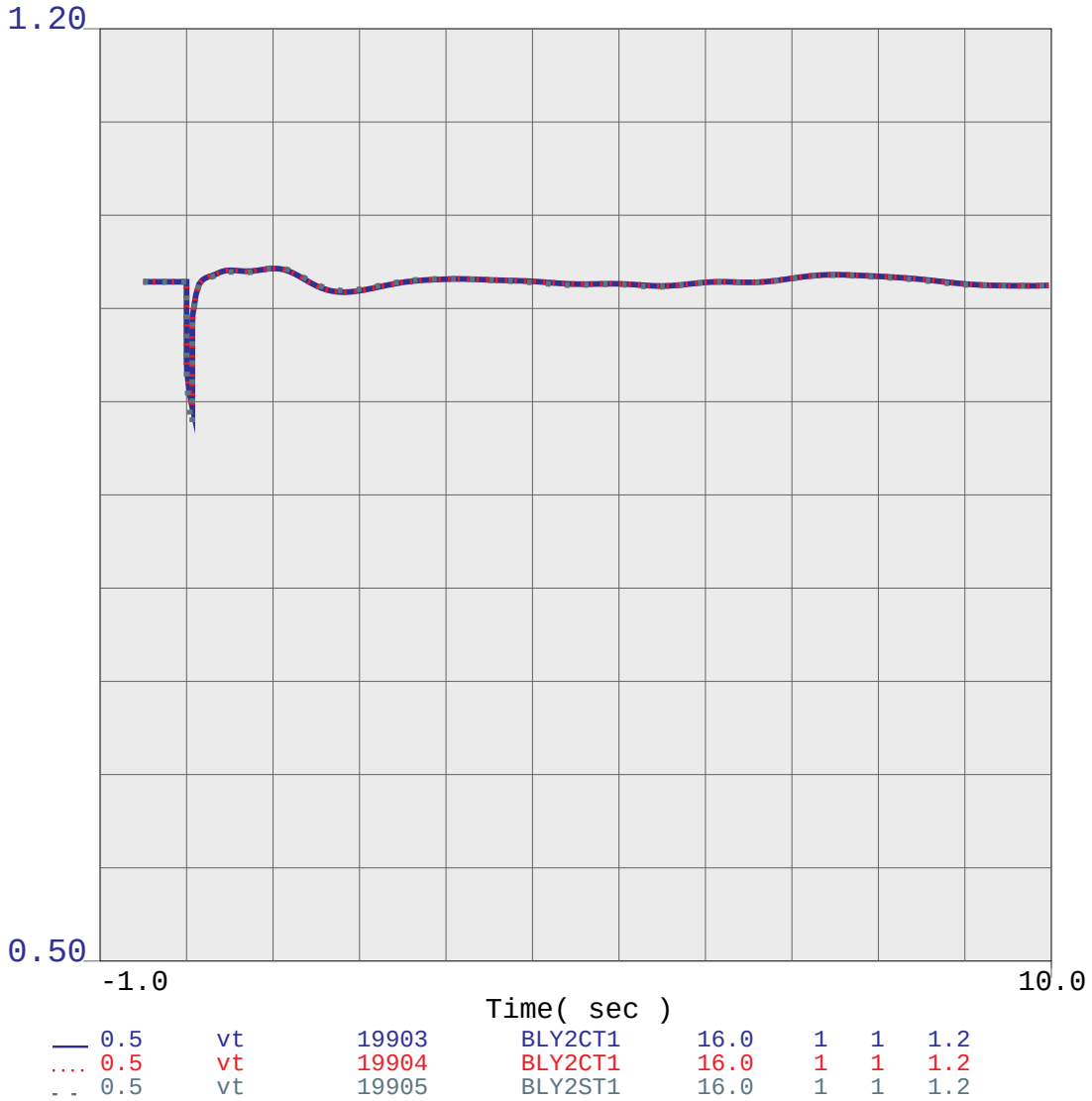

beppostprojectwdpv2stability_Devers-Valley-slo
SERIES COMPENSATION 520MW INCREASE
WITH DPV2 - POST PROJECT

BVM2

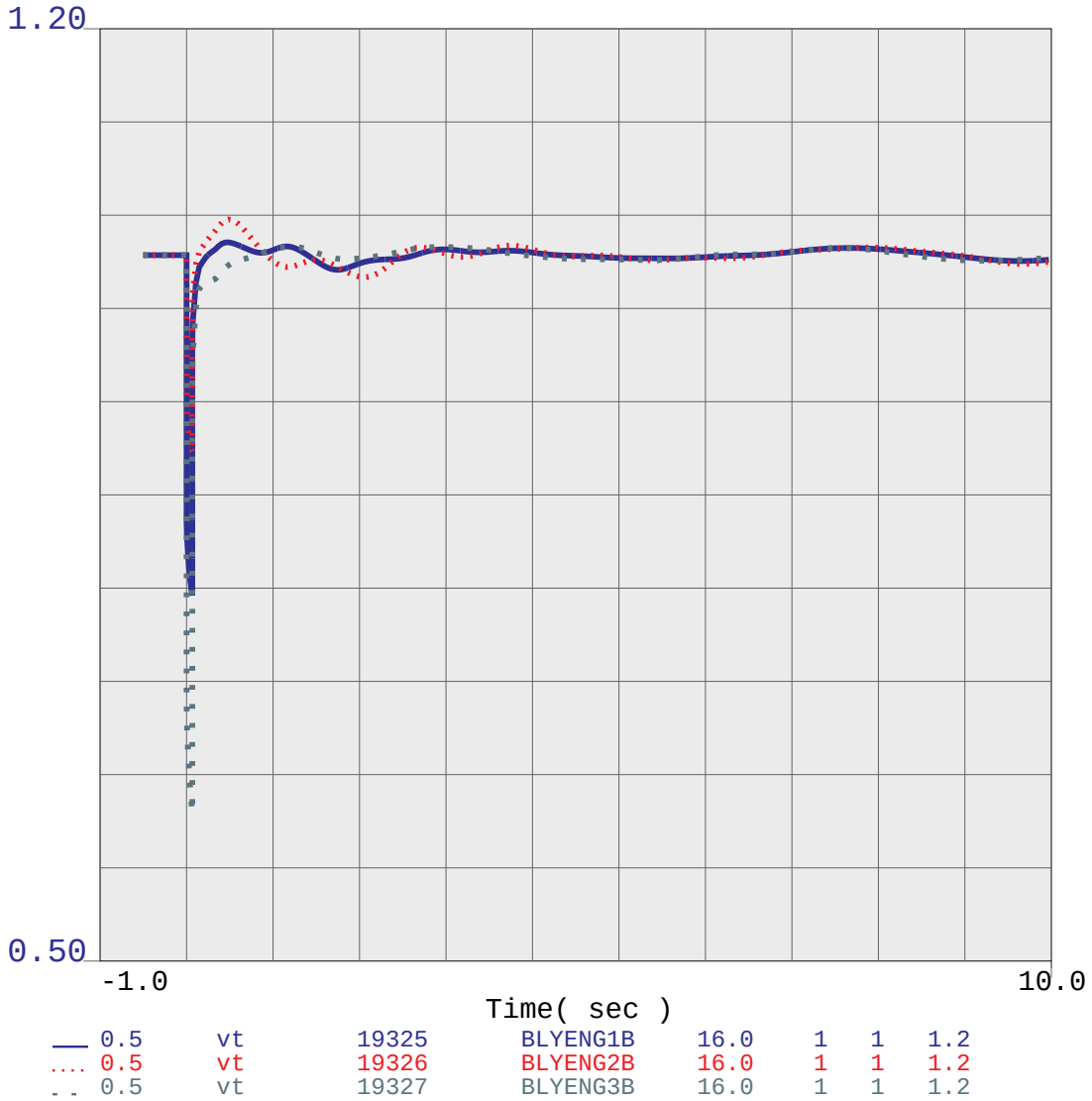

beppostprojectwdpv2stability_Devers-Valley-slo
SERIES COMPENSATION 520MW INCREASE
WITH DPV2 - POST PROJECT

BVM2

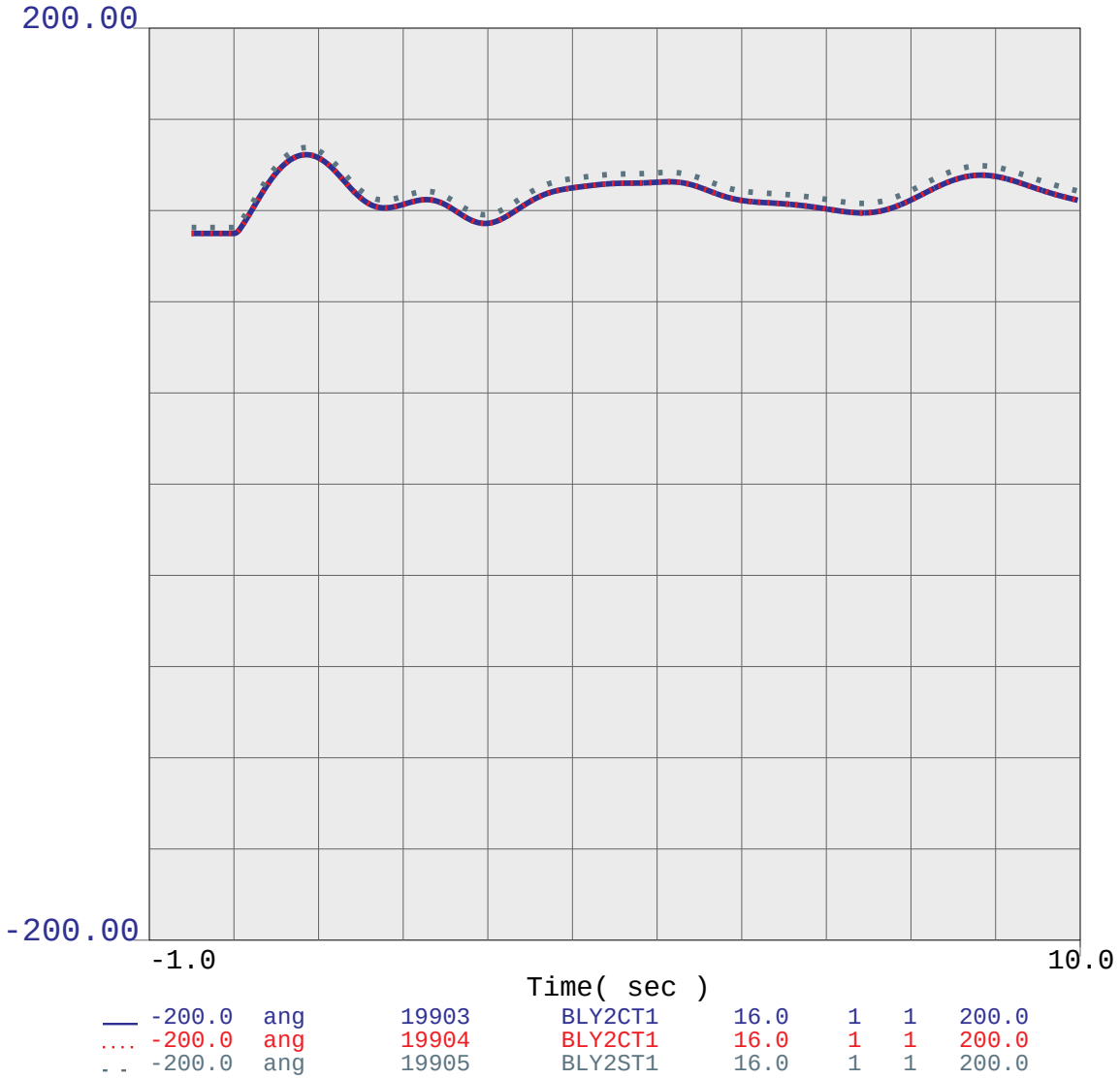

beppostprojectwdpv2stability_Devers-Valley-slo
SERIES COMPENSATION 520MW INCREASE
WITH DPV2 - POST PROJECT

BVM2

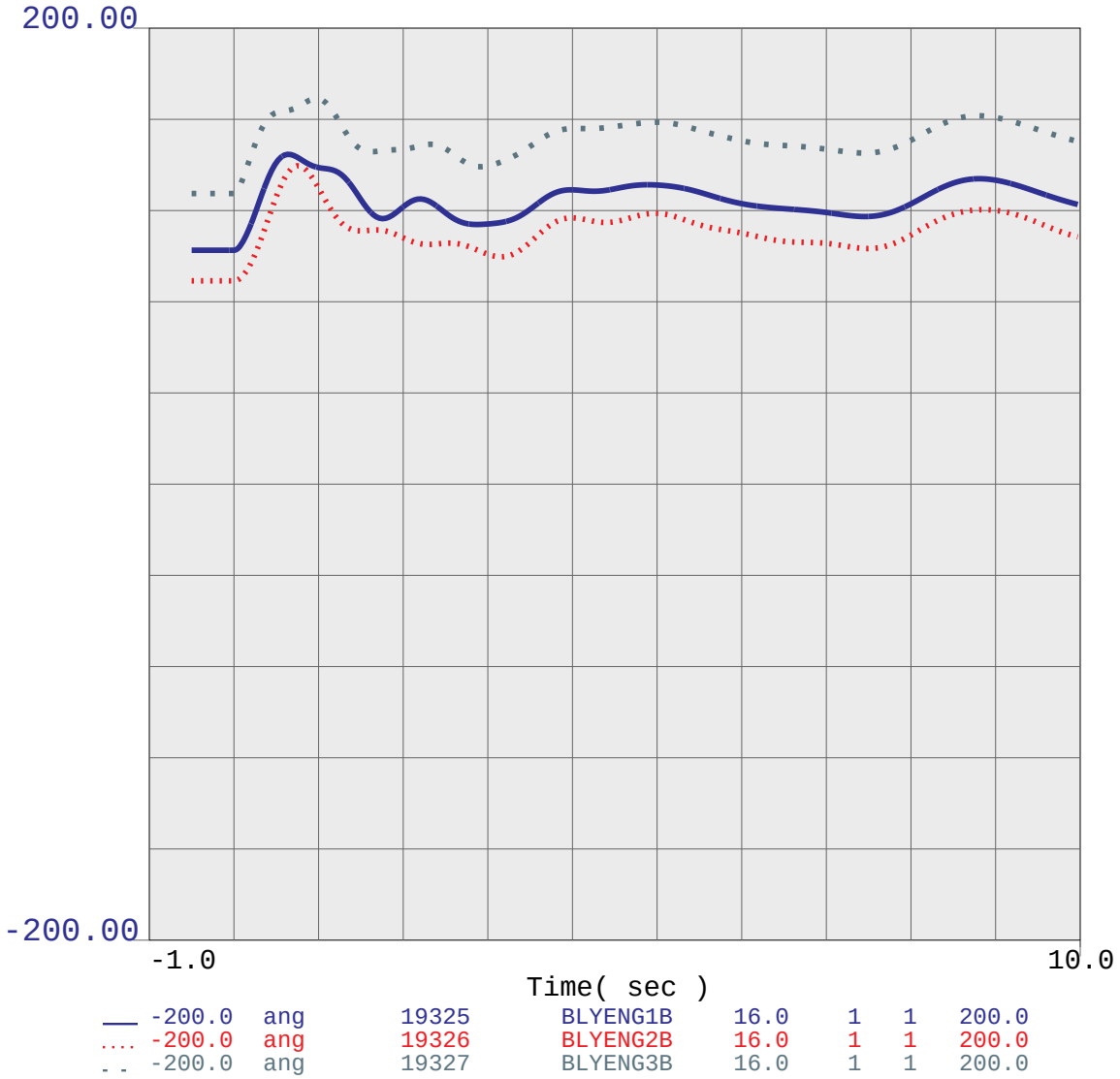

beppostprojectwdpv2stability_Devers-Valley-slo
SERIES COMPENSATION 520MW INCREASE
WITH DPV2 - POST PROJECT

BVM1

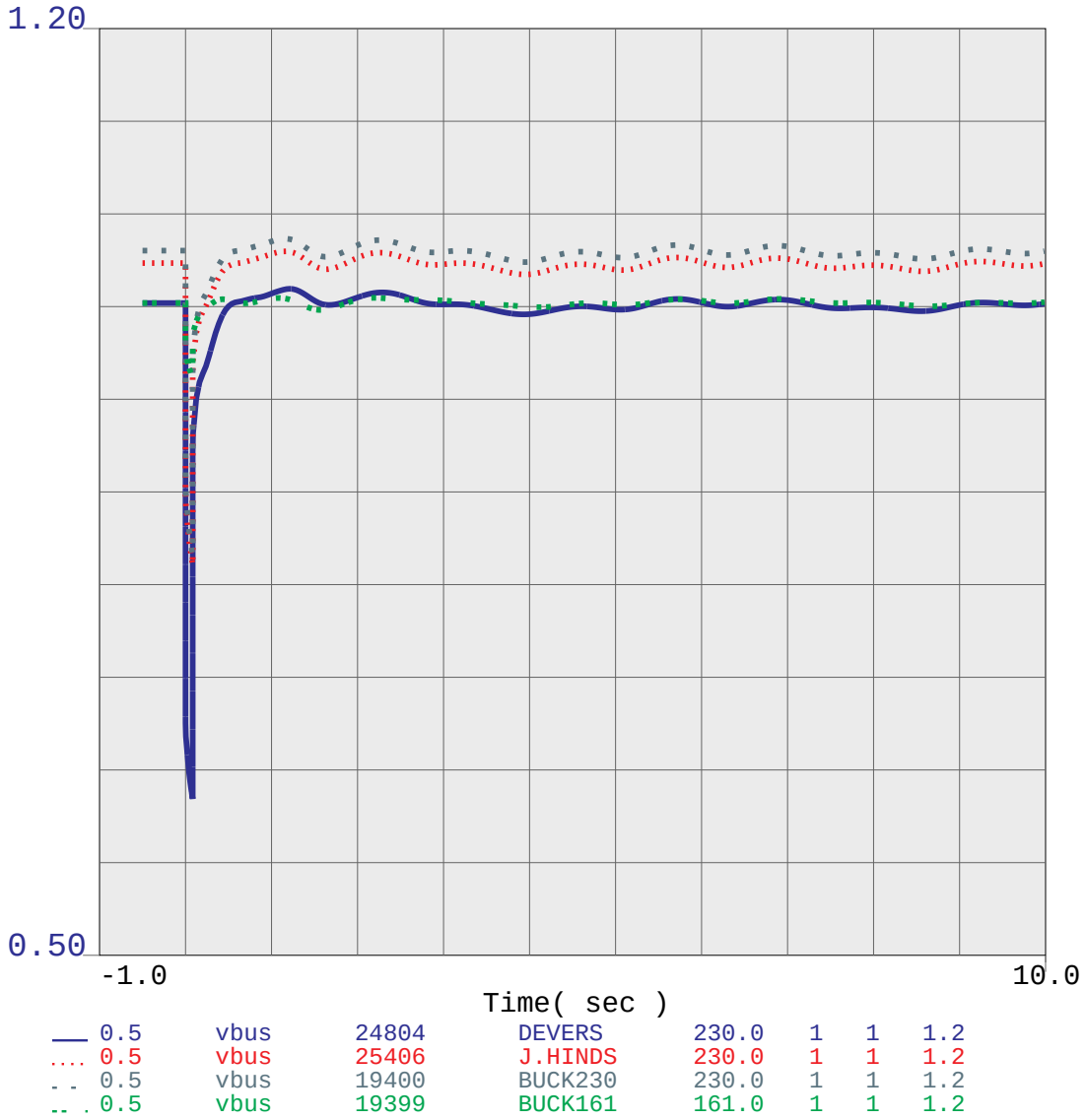

beppostprojectwdpv2stability_devsanb
SERIES COMPENSATION 520MW INCREASE
WITH DPV2 - POST PROJECT

BVM2

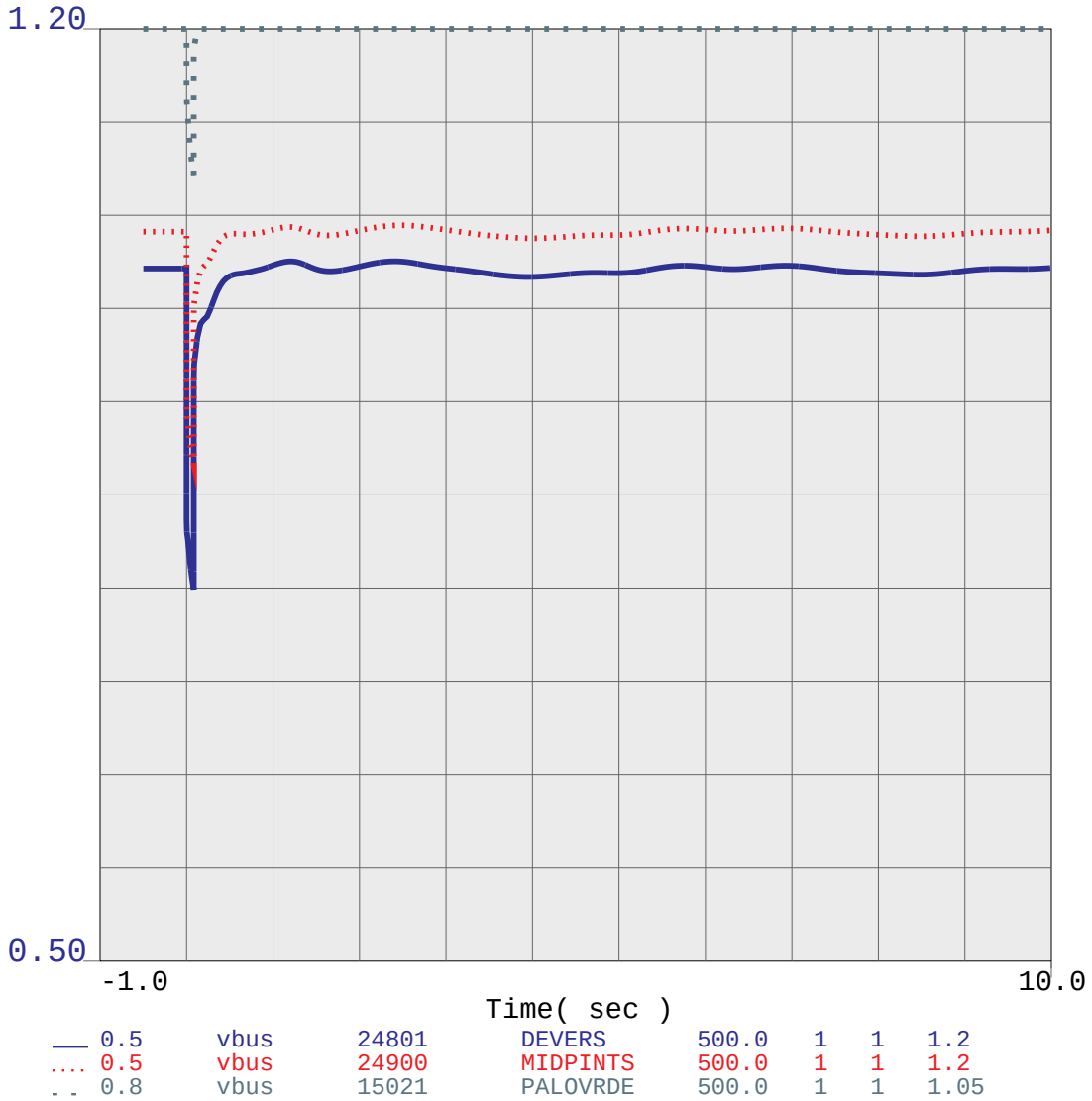

beppostprojectwdpv2stability_devsanb
SERIES COMPENSATION 520MW INCREASE
WITH DPV2 - POST PROJECT

BVM2

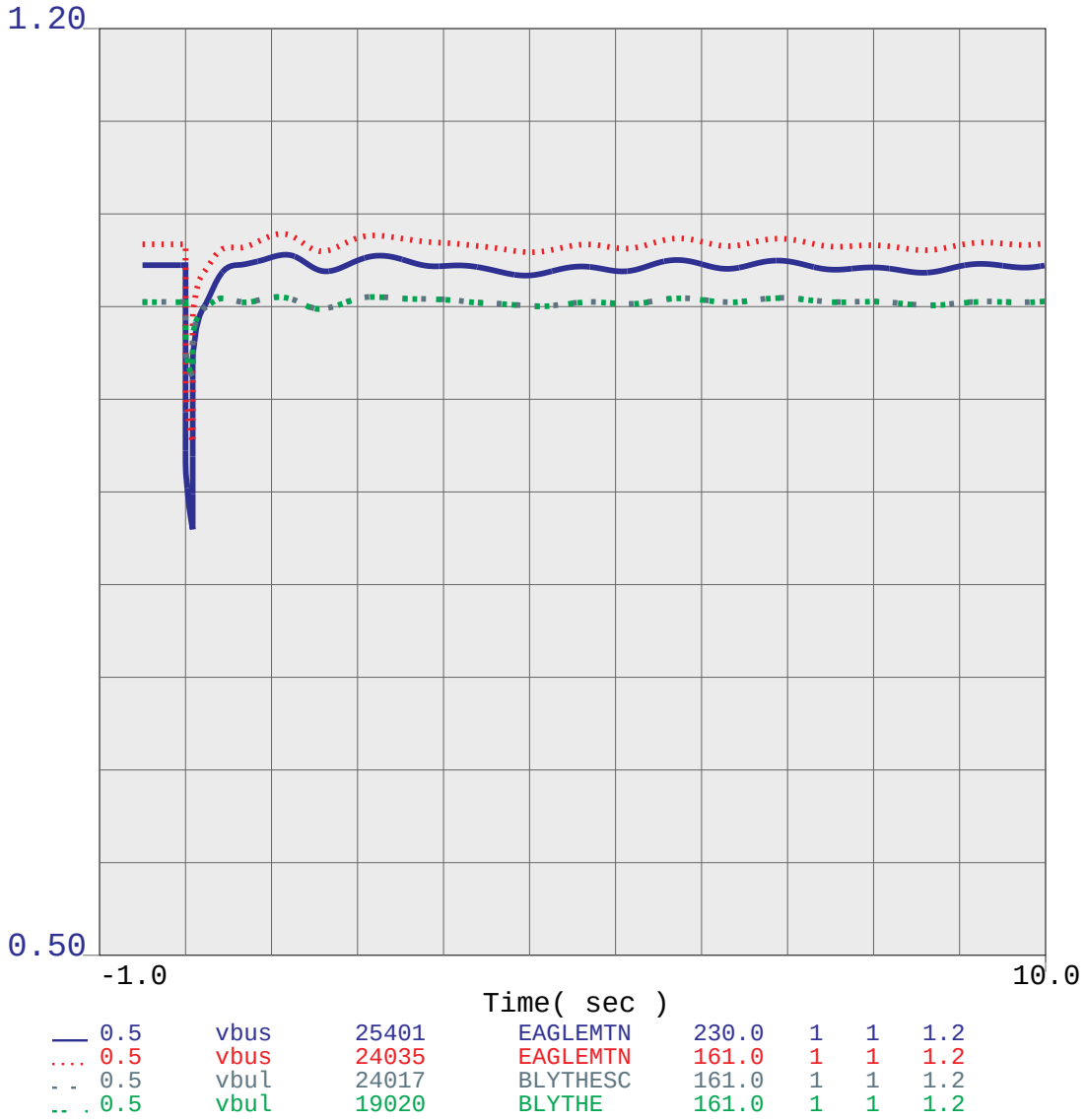

beppostprojectwdpv2stability_devsanb
SERIES COMPENSATION 520MW INCREASE
WITH DPV2 - POST PROJECT

BVM2

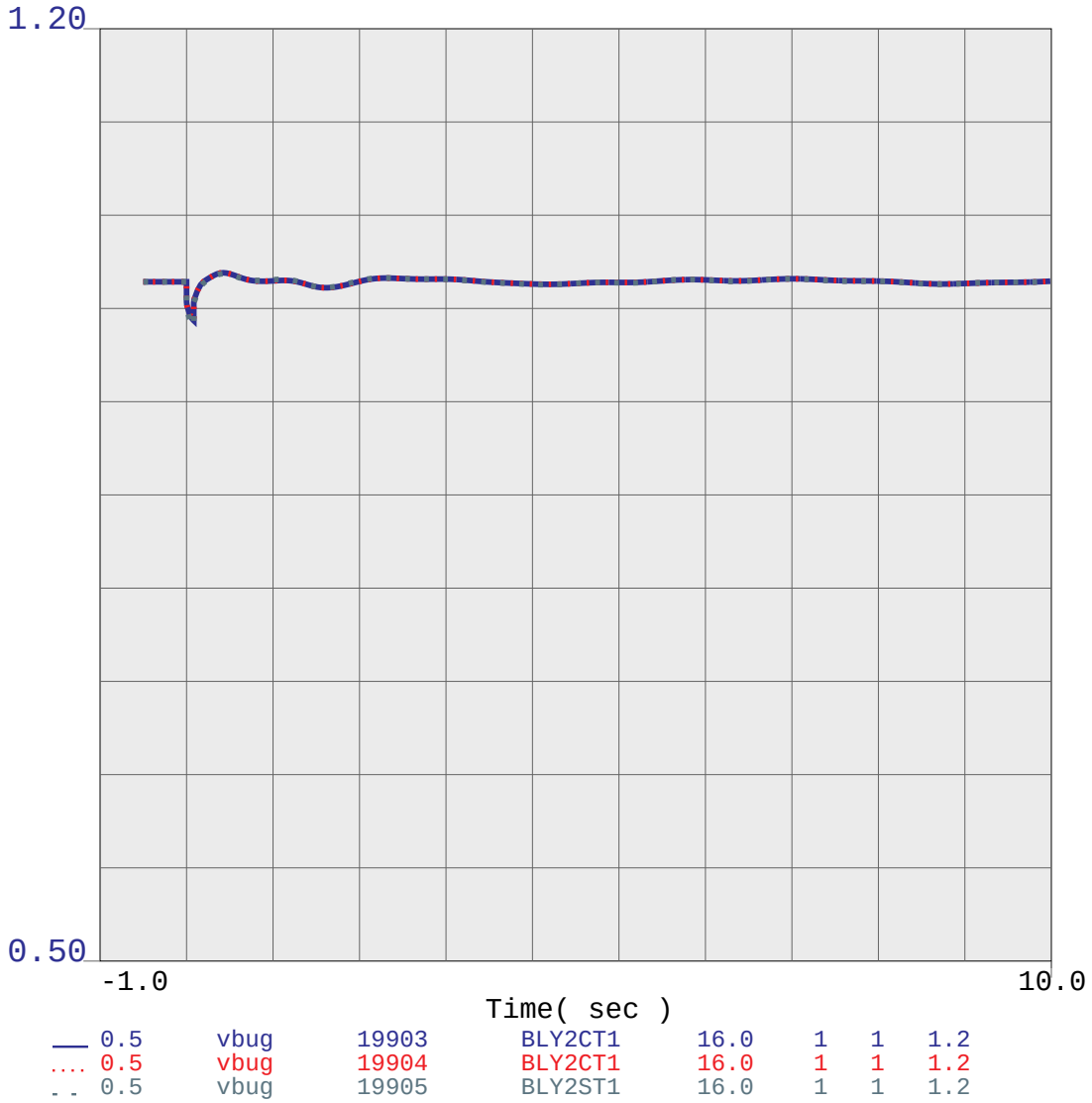

beppostprojectwdpv2stability_devsanb
SERIES COMPENSATION 520MW INCREASE
WITH DPV2 - POST PROJECT

BVM2

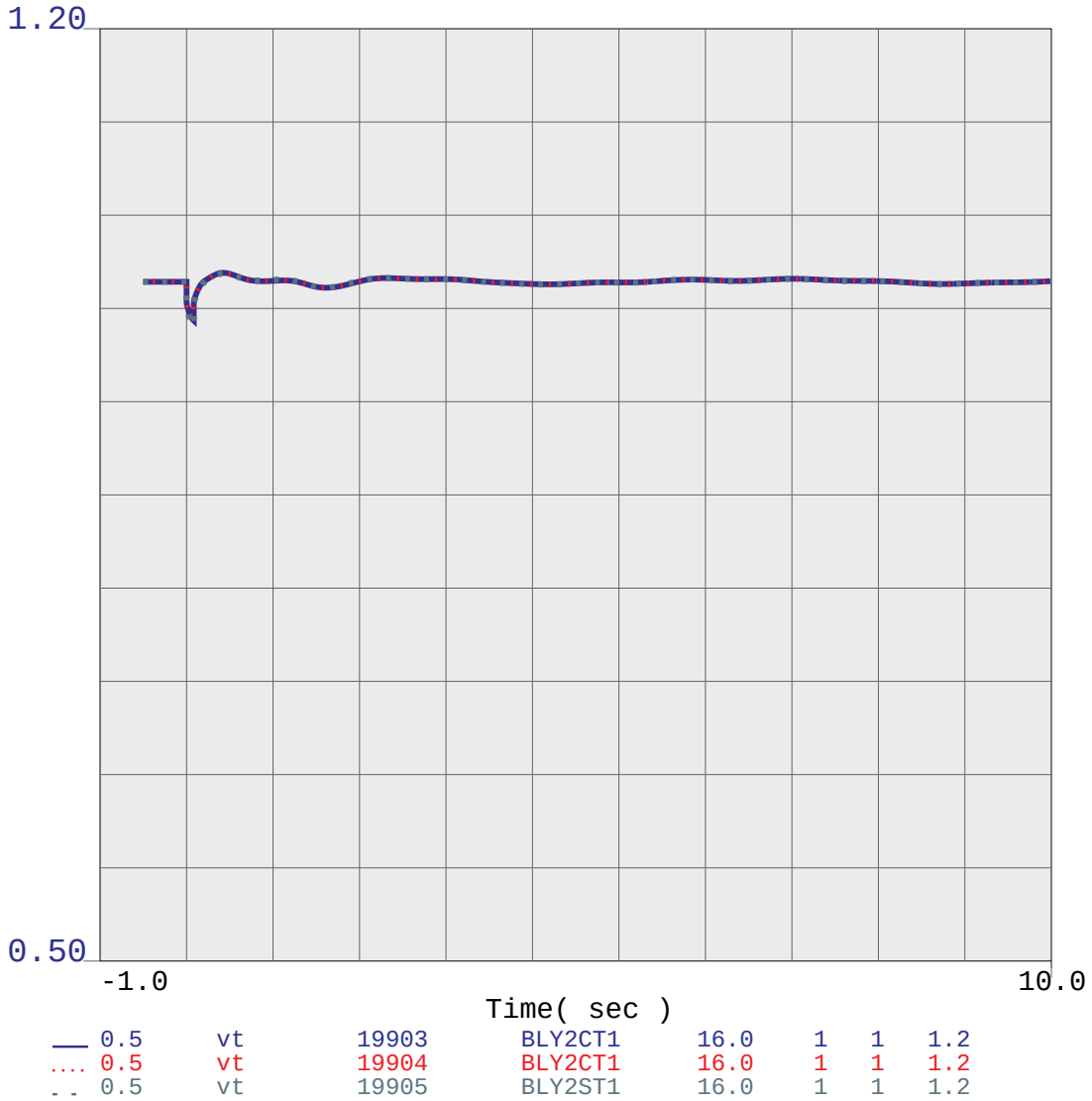

beppostprojectwdpv2stability_devsanb
SERIES COMPENSATION 520MW INCREASE
WITH DPV2 - POST PROJECT

BVM2

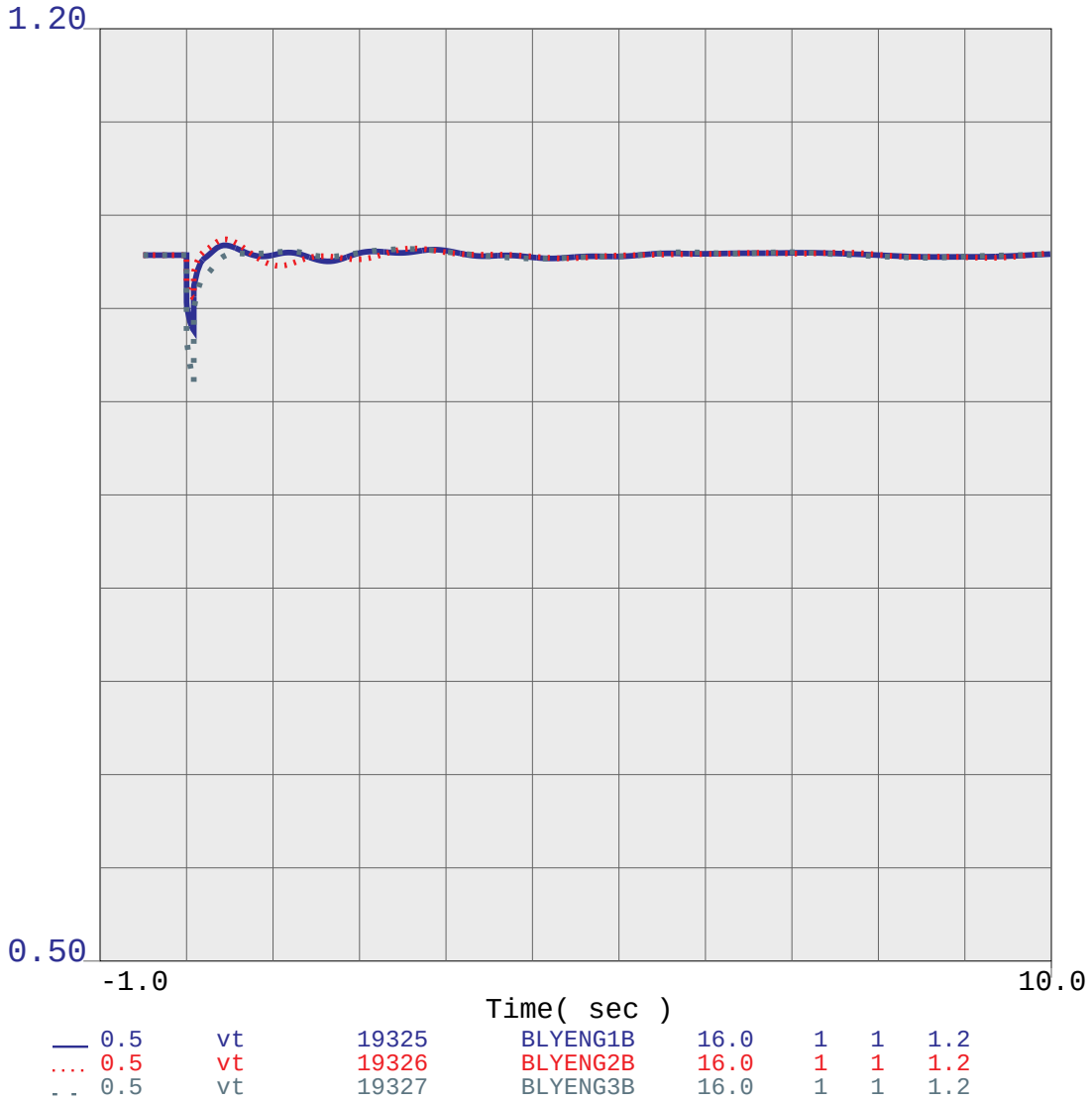

beppostprojectwdpv2stability_devsanb
SERIES COMPENSATION 520MW INCREASE
WITH DPV2 - POST PROJECT

BVM2

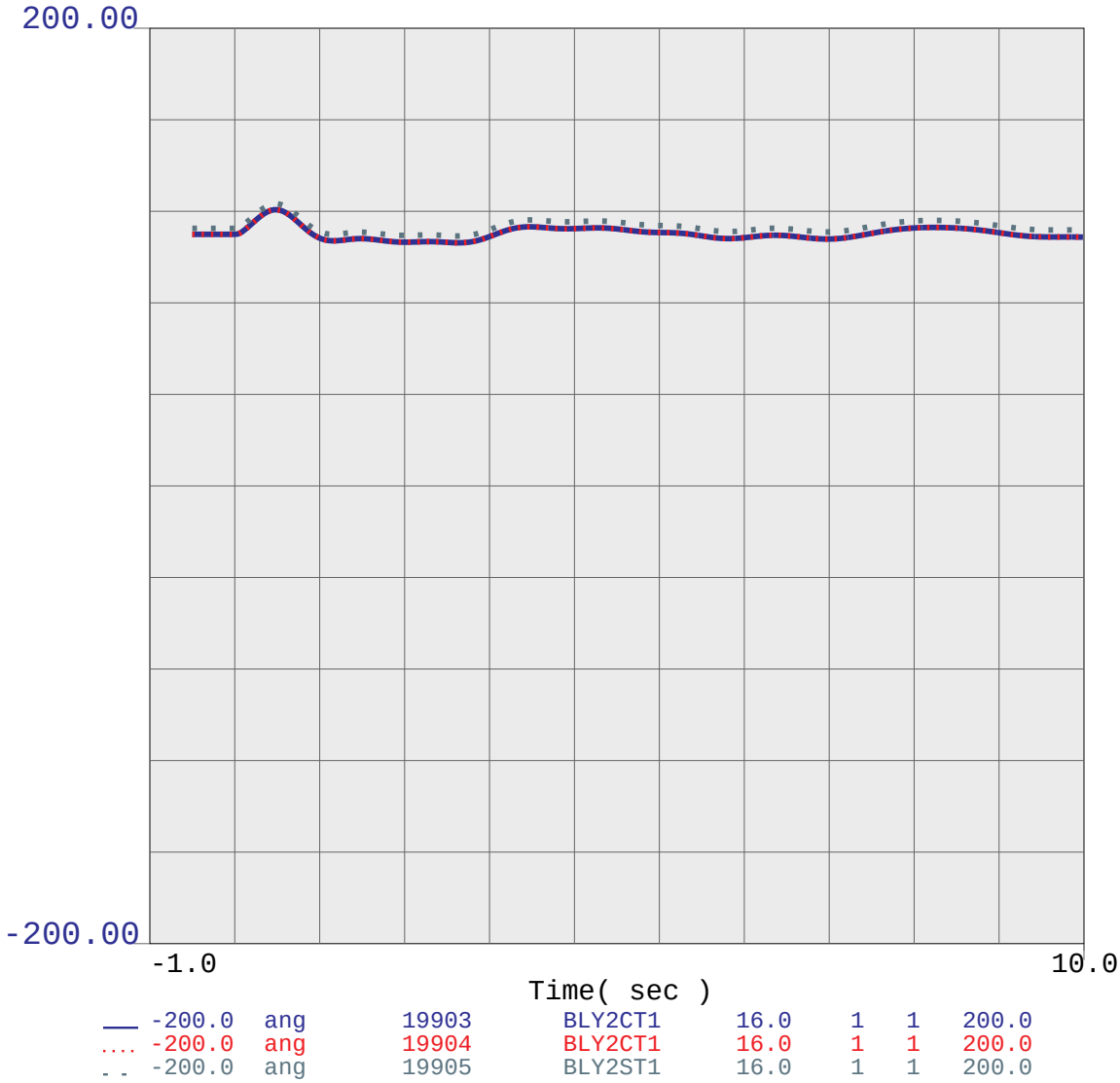

beppostprojectwdpv2stability_devsanb
SERIES COMPENSATION 520MW INCREASE
WITH DPV2 - POST PROJECT

BVM2

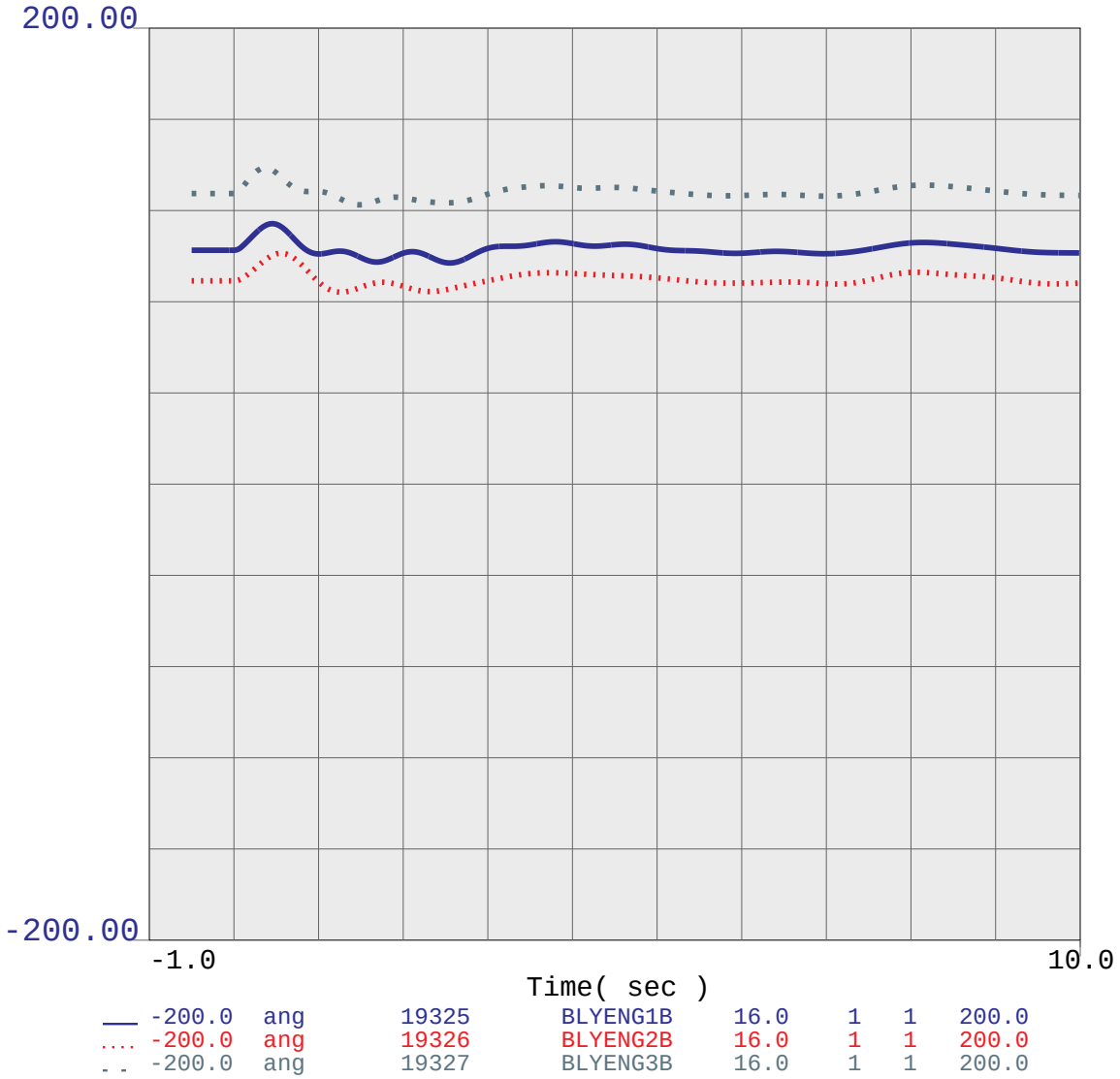

beppostprojectwdpv2stability_devsanb
SERIES COMPENSATION 520MW INCREASE
WITH DPV2 - POST PROJECT

BVM1

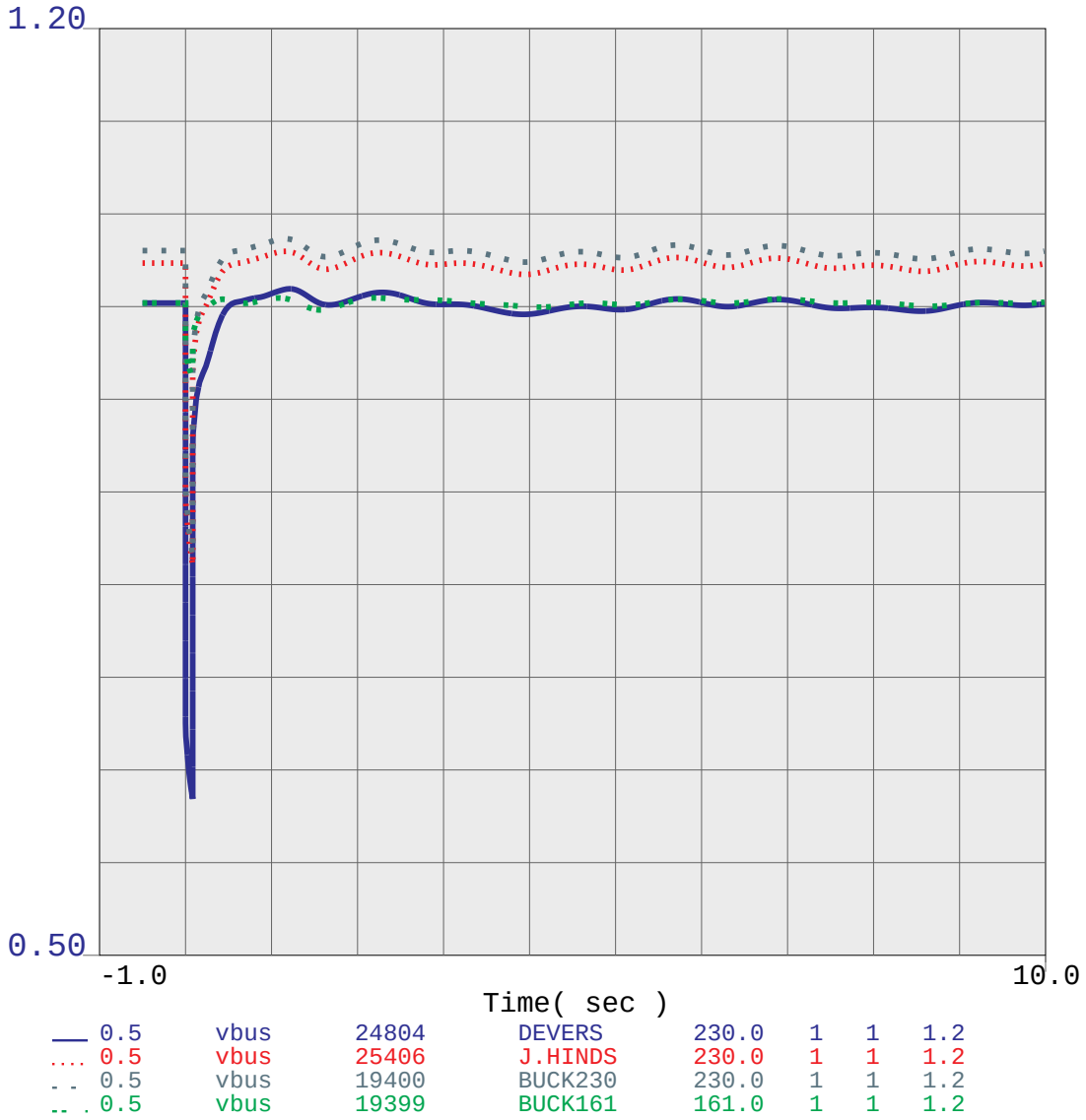

beppostprojectwdpv2stability_devsanbsanbvista
SERIES COMPENSATION 520MW INCREASE
WITH DPV2 - POST PROJECT

BVM2

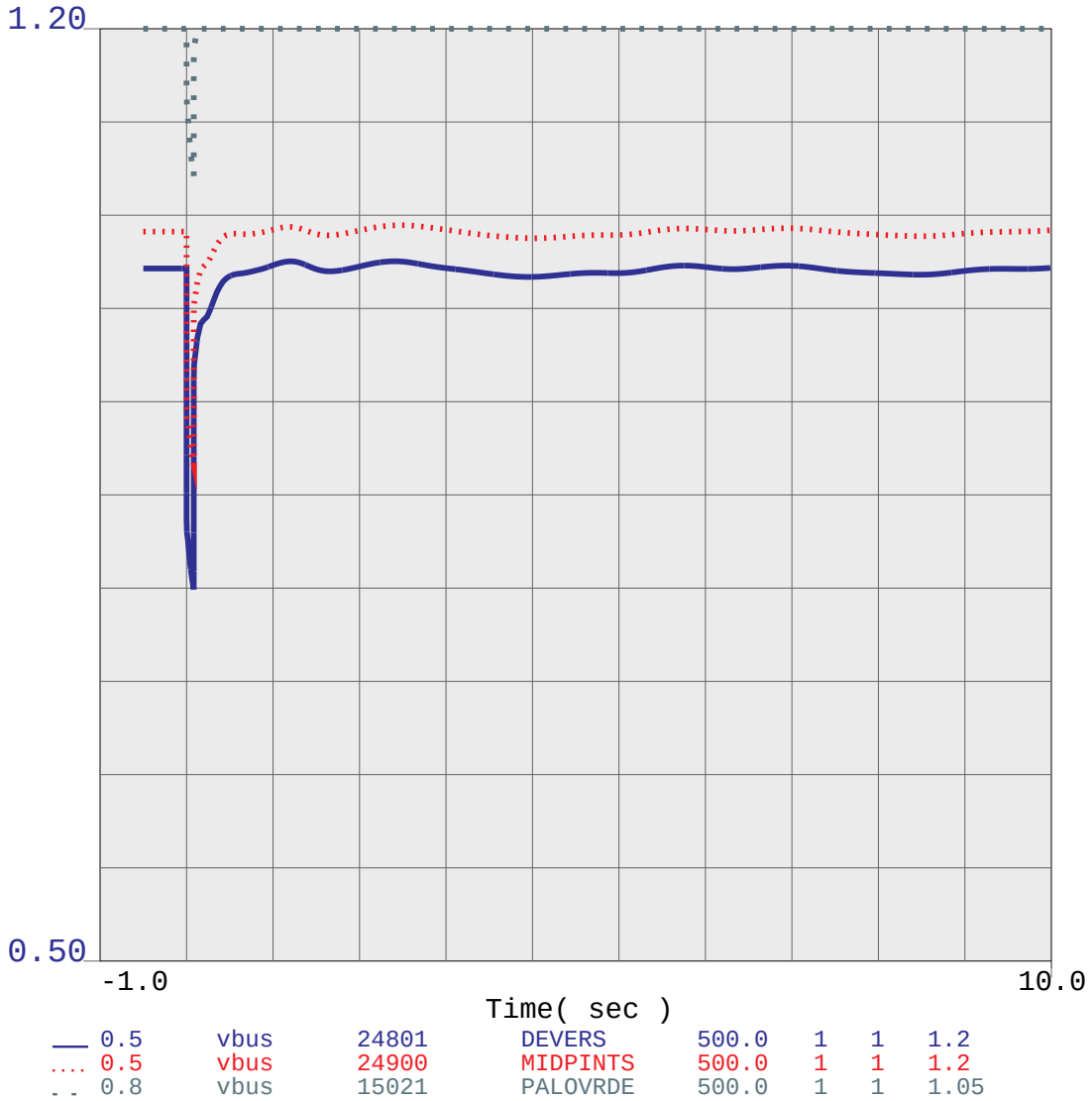

beppostprojectwdpv2stability_devsanbsanbvista
SERIES COMPENSATION 520MW INCREASE
WITH DPV2 - POST PROJECT

BVM2

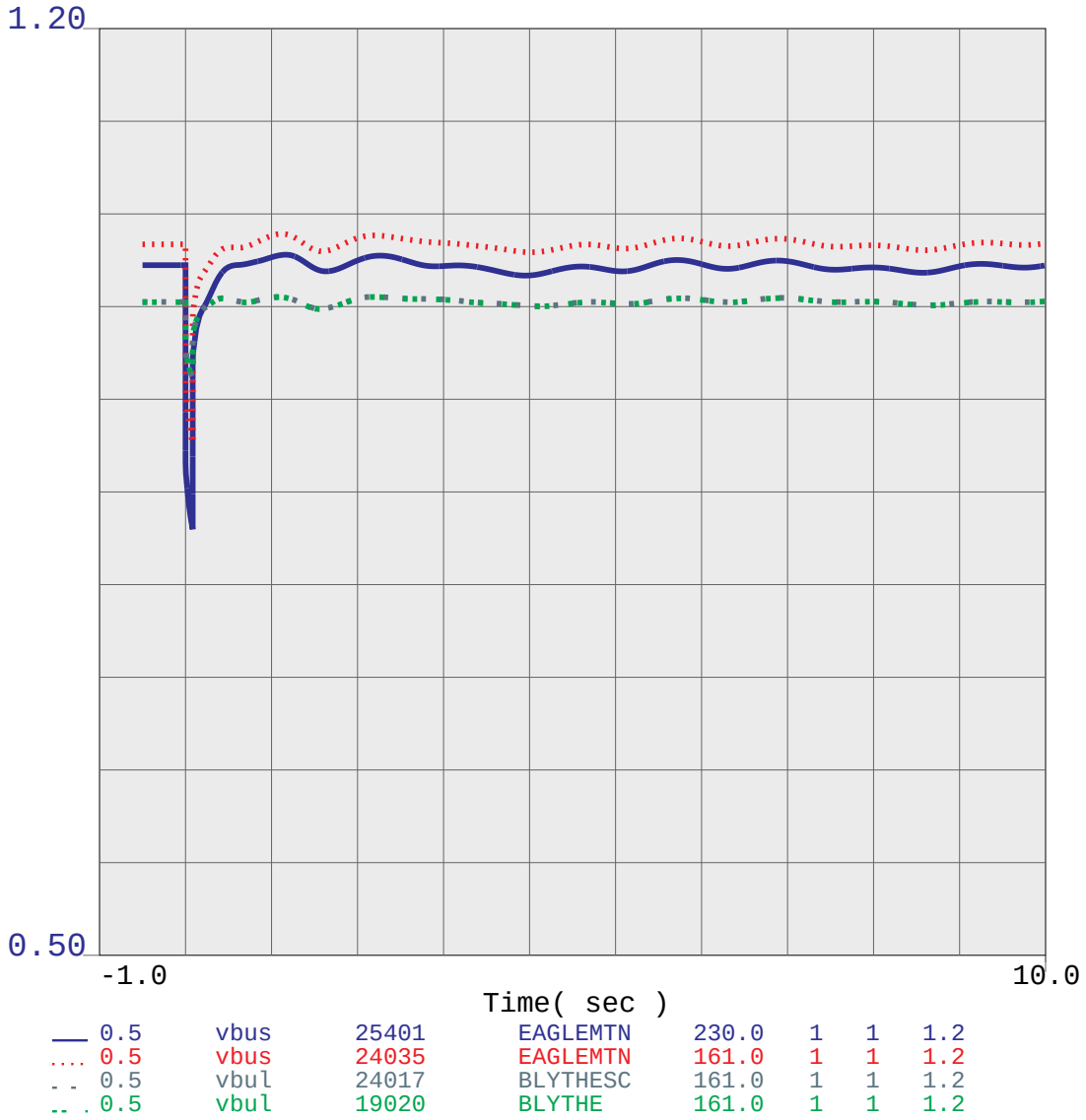

beppostprojectwdpv2stability_devsanbsanbvista
SERIES COMPENSATION 520MW INCREASE
WITH DPV2 - POST PROJECT

BVM2

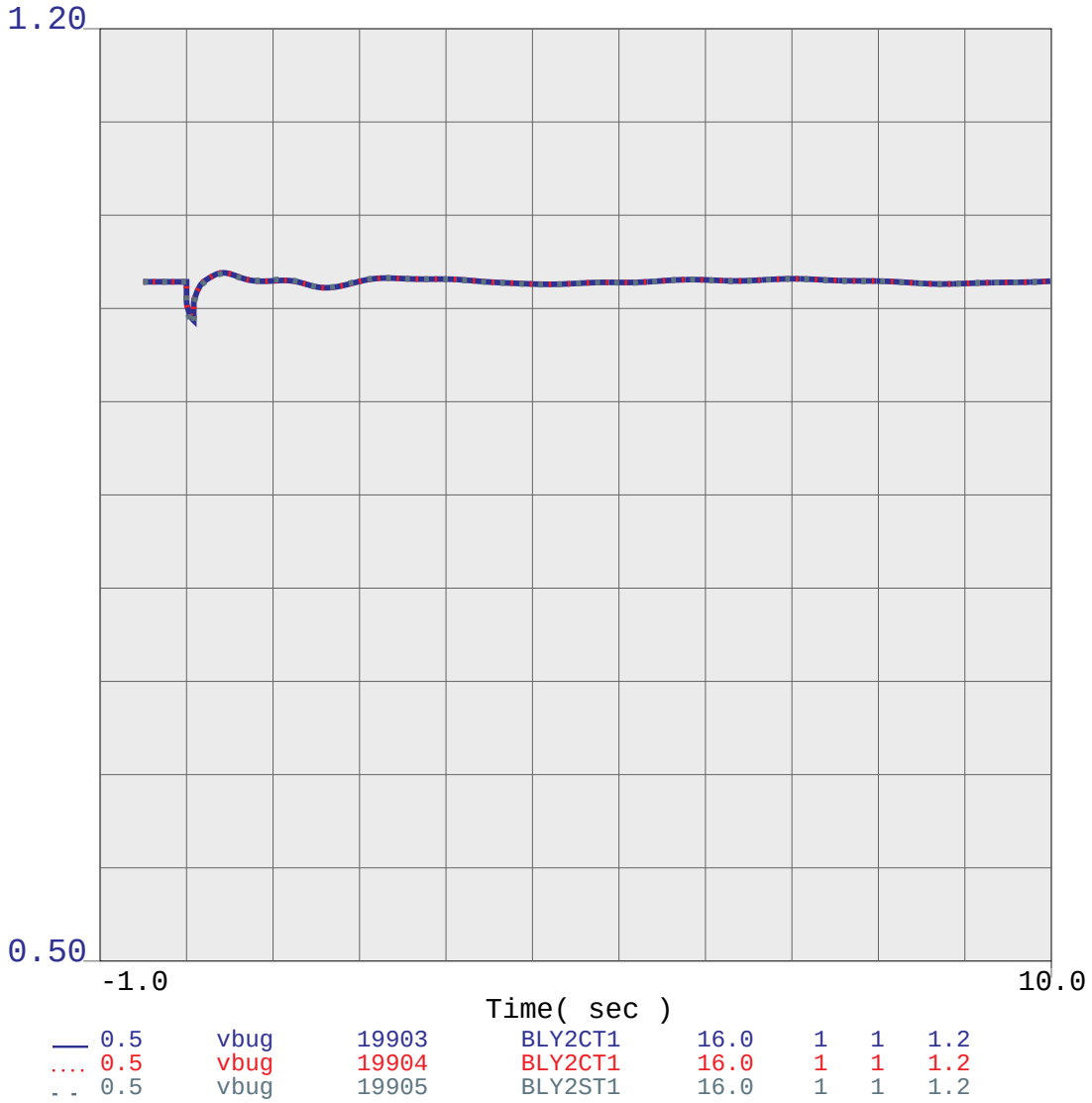

beppostprojectwdpv2stability_devsanbsanbvista
SERIES COMPENSATION 520MW INCREASE
WITH DPV2 - POST PROJECT

BVM2

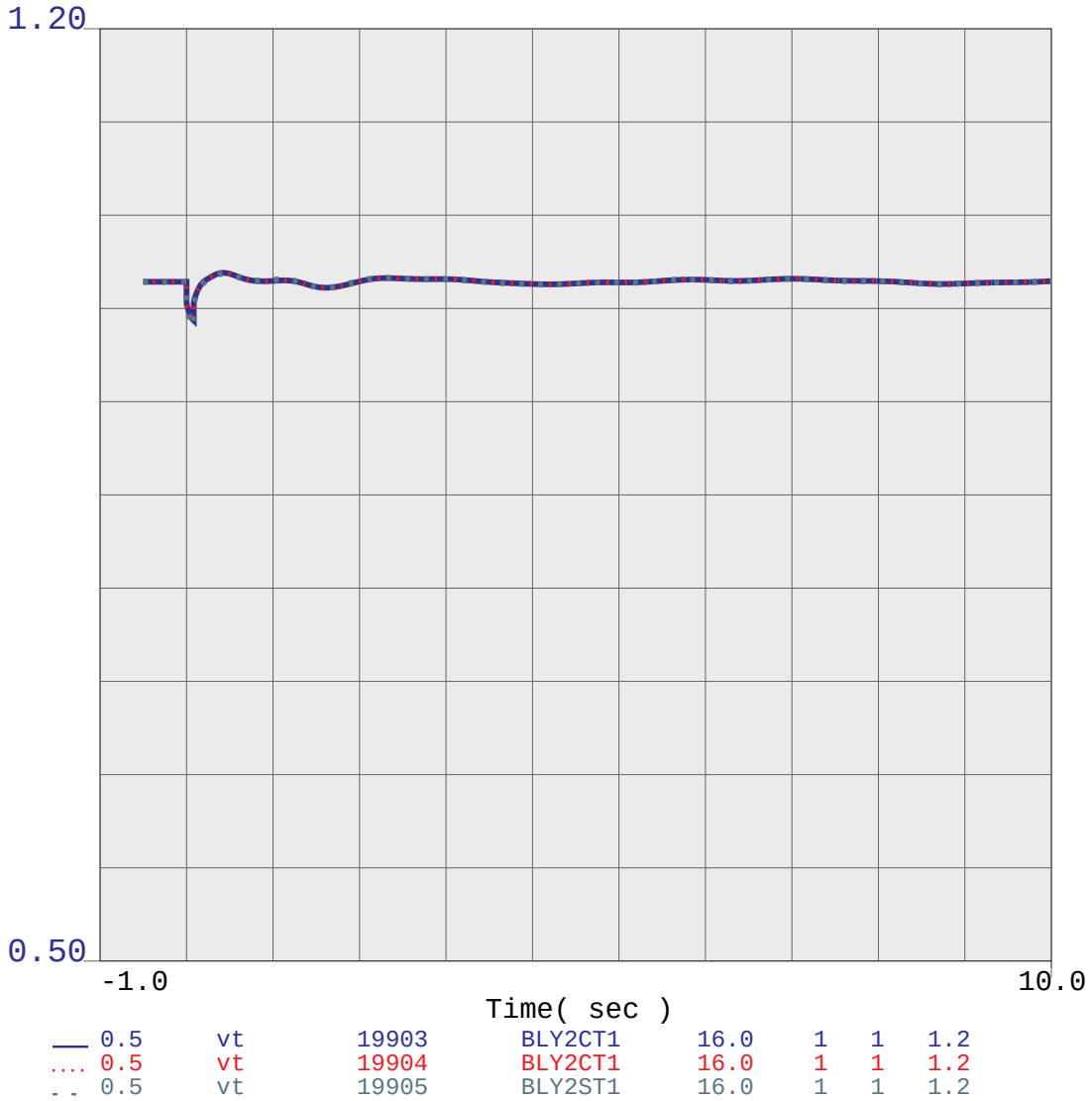

beppostprojectwdpv2stability_devsanbsanbvista
SERIES COMPENSATION 520MW INCREASE
WITH DPV2 - POST PROJECT

BVM2

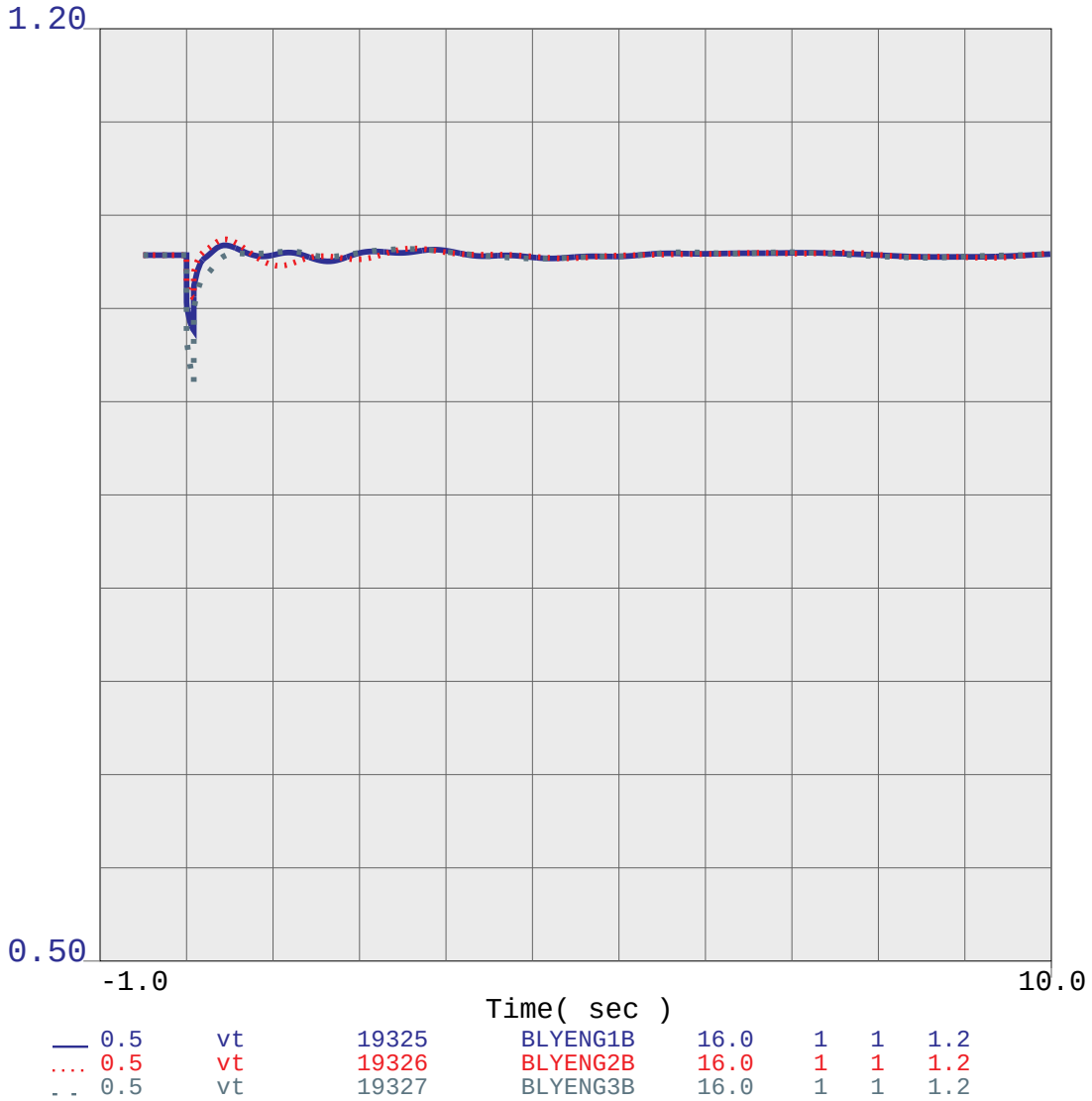

beppostprojectwdpv2stability_devsanbsanbvista
SERIES COMPENSATION 520MW INCREASE
WITH DPV2 - POST PROJECT

BVM2

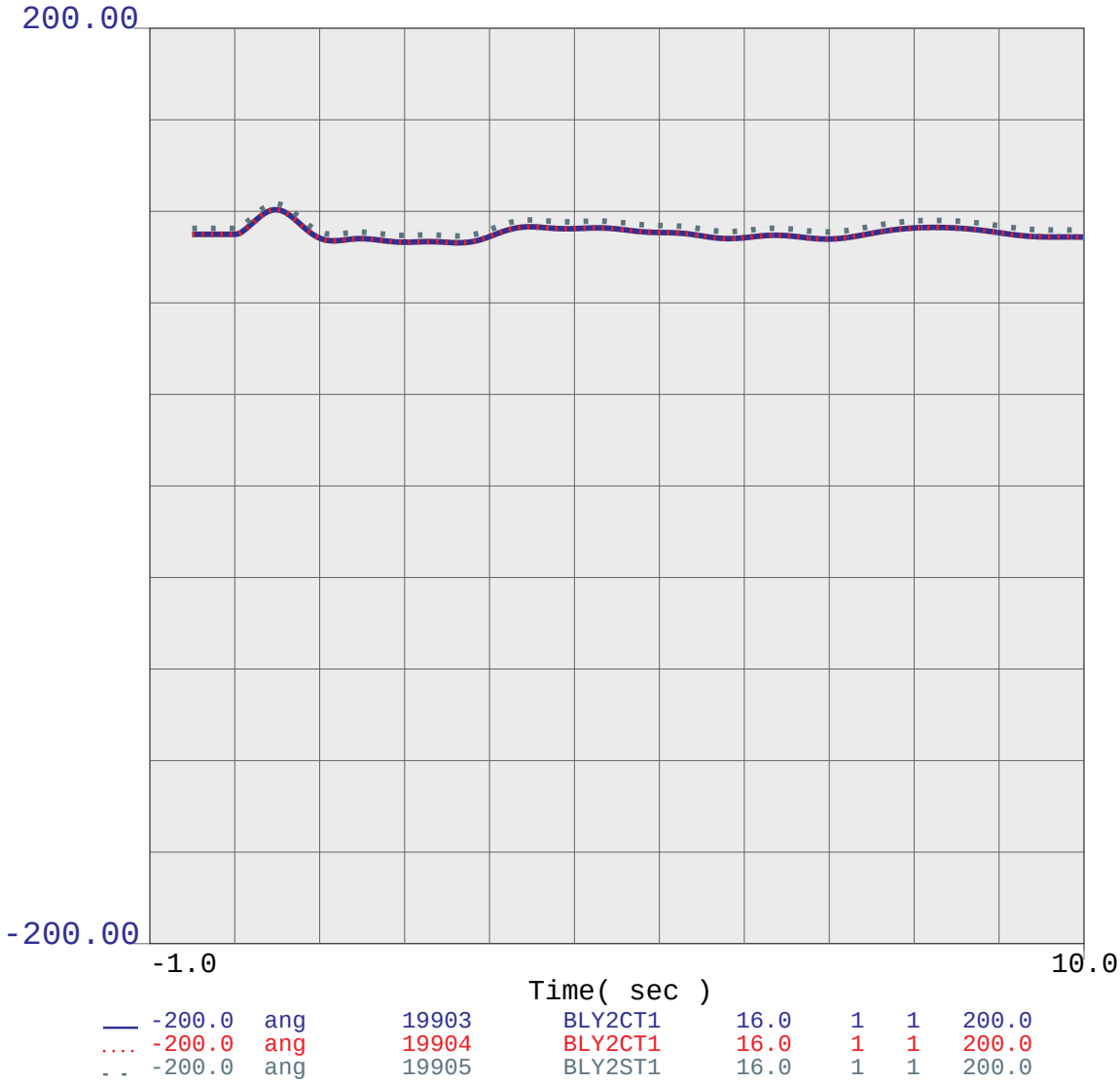

beppostprojectwdpv2stability_devsanbsanbvista
SERIES COMPENSATION 520MW INCREASE
WITH DPV2 - POST PROJECT

BVM2

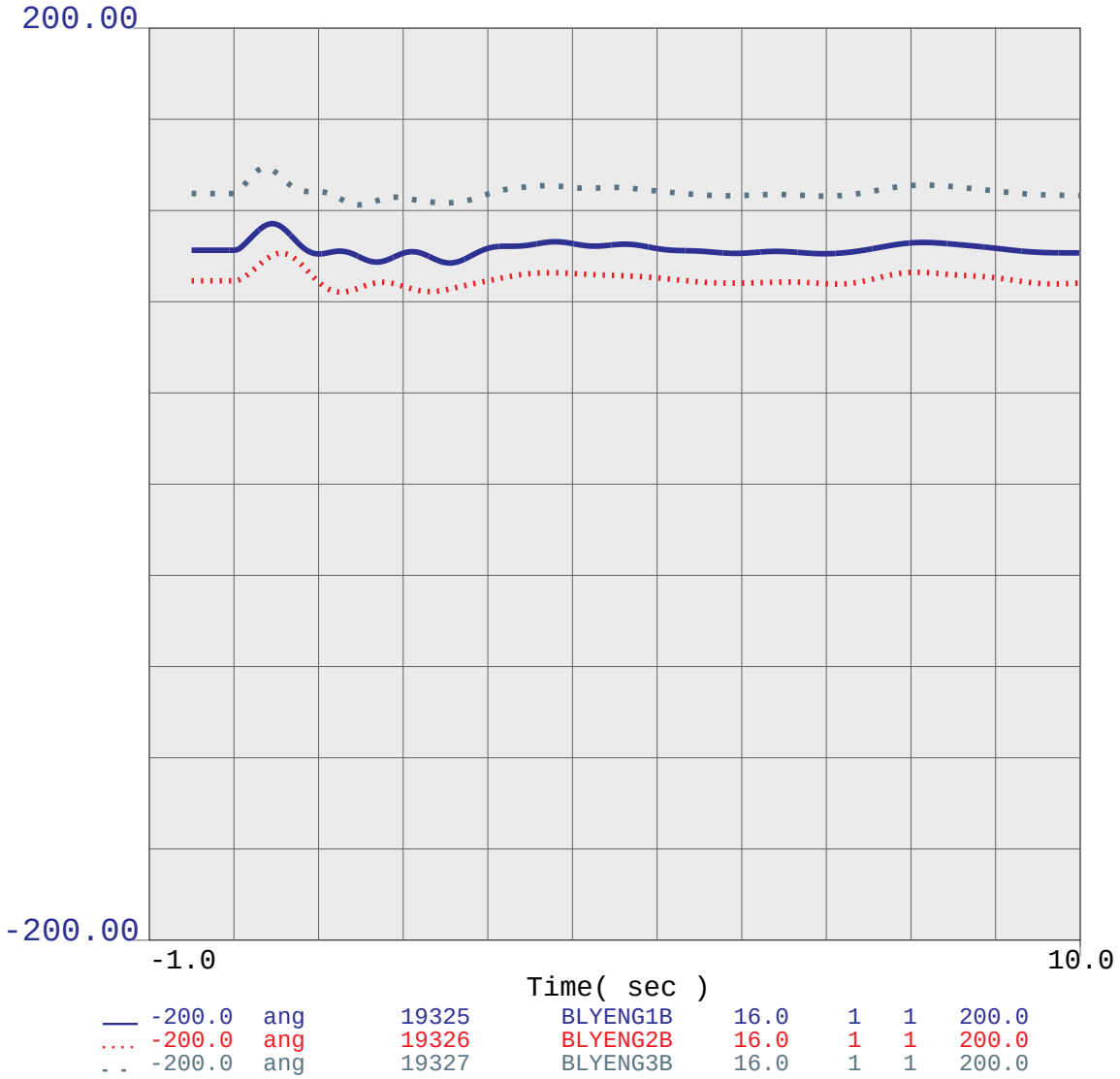

beppostprojectwdpv2stability_devsanbsanbvista
SERIES COMPENSATION 520MW INCREASE
WITH DPV2 - POST PROJECT

BVM1

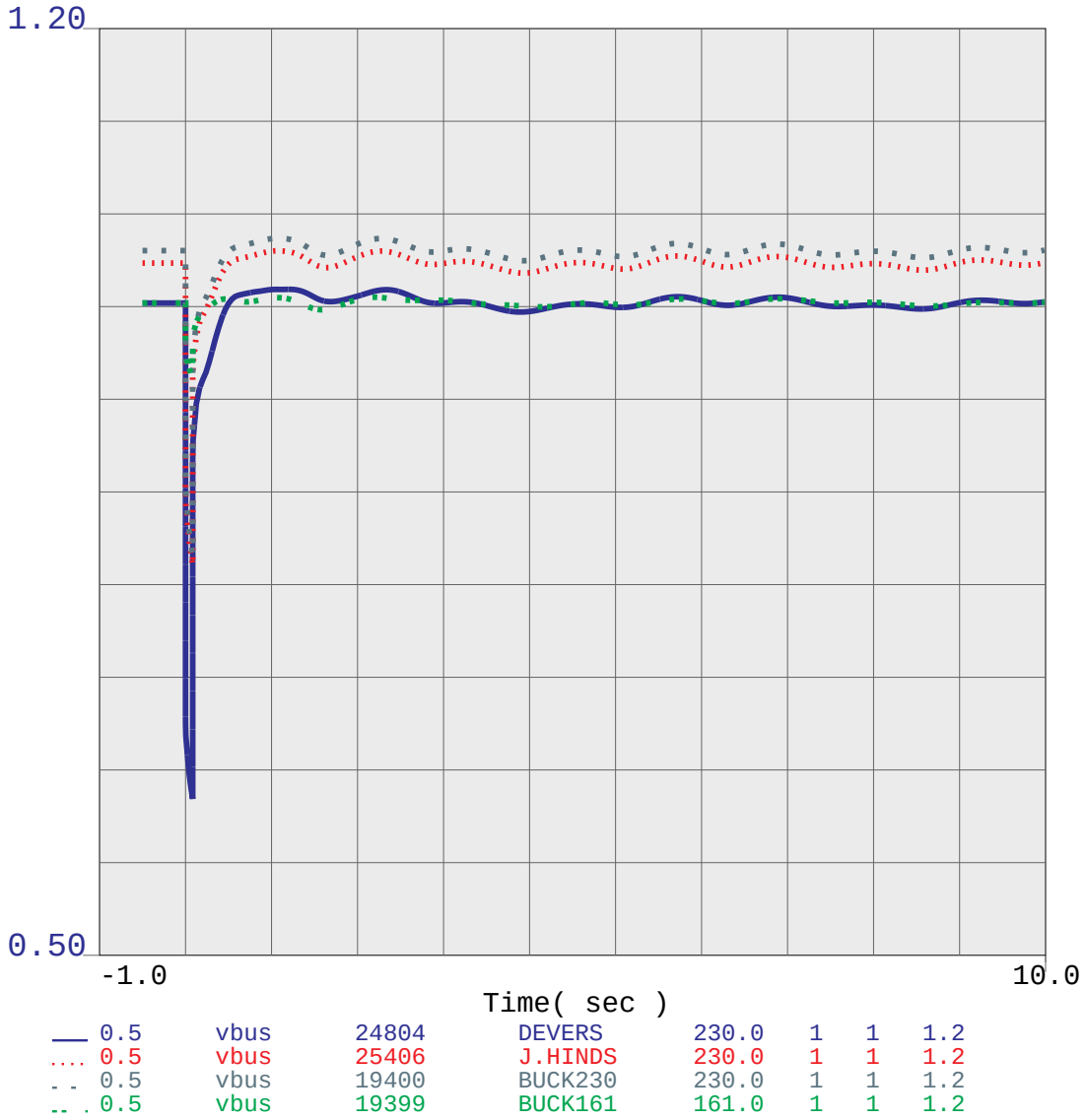

beppostprojectwdpv2stability_etiwandasanb
SERIES COMPENSATION 520MW INCREASE
WITH DPV2 - POST PROJECT

BVM2

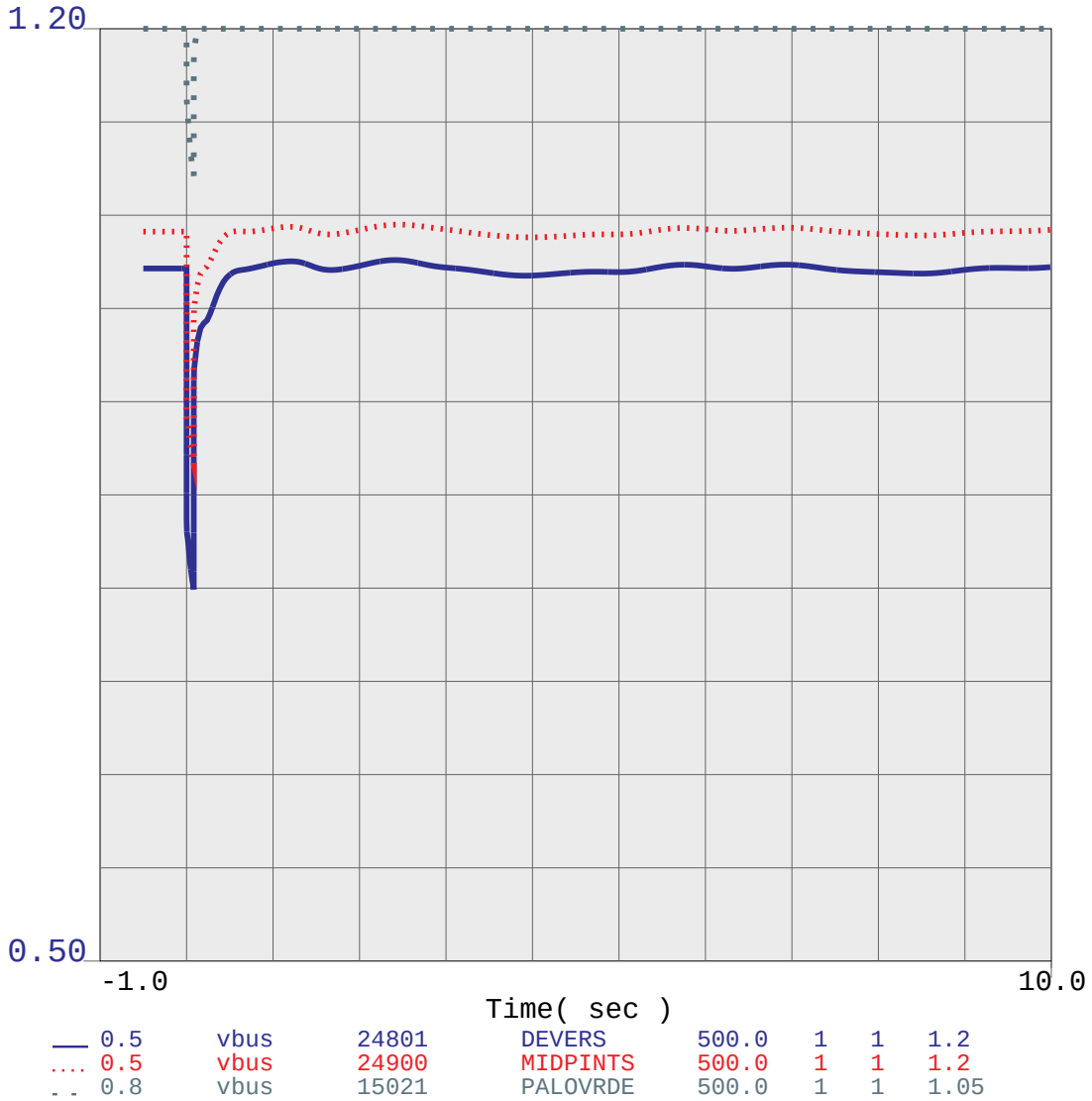

beppostprojectwdpv2stability_etiwandasanb
SERIES COMPENSATION 520MW INCREASE
WITH DPV2 - POST PROJECT

BVM2

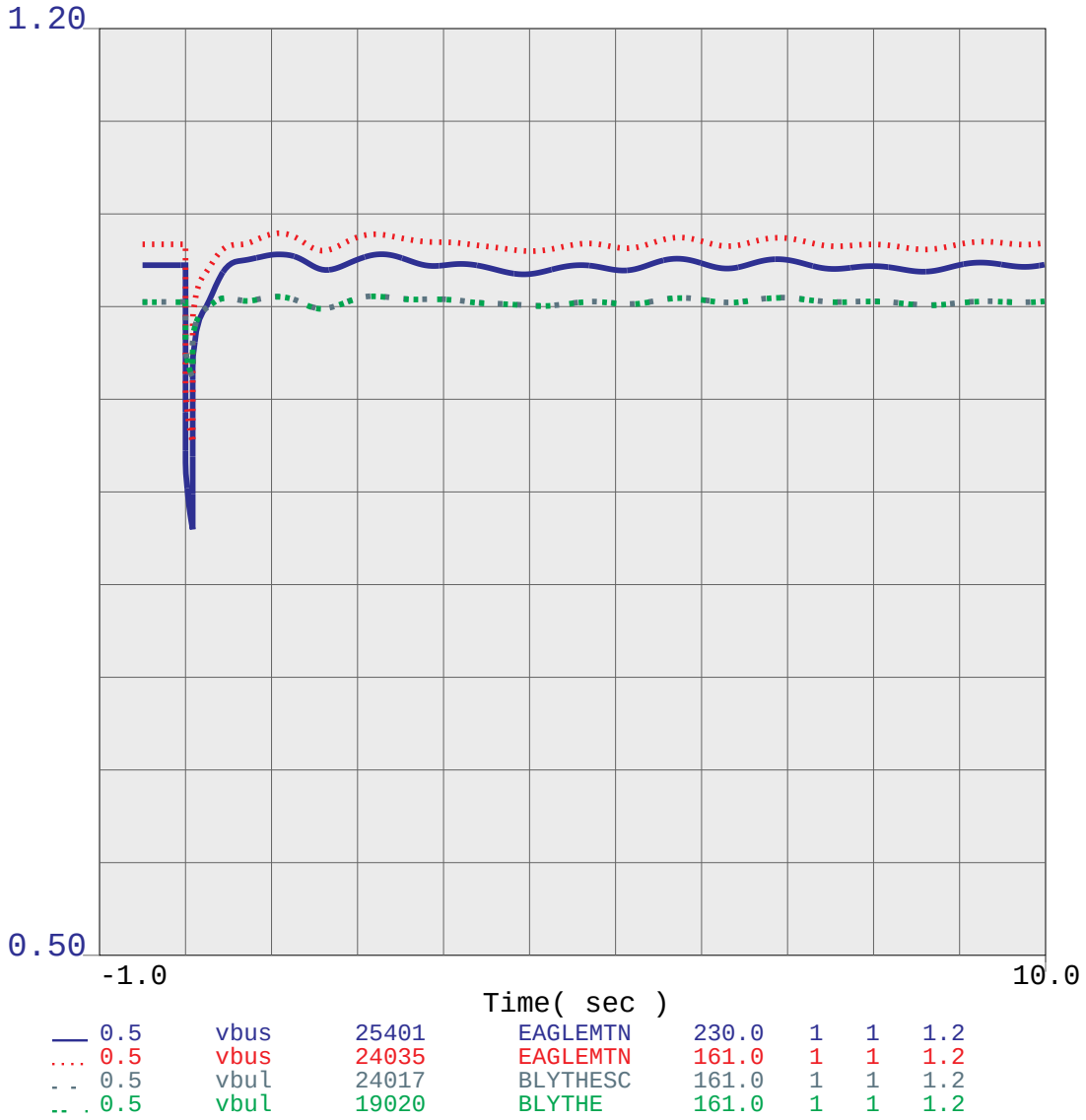

beppostprojectwdpv2stability_etiwandasanb
SERIES COMPENSATION 520MW INCREASE
WITH DPV2 - POST PROJECT

BVM2

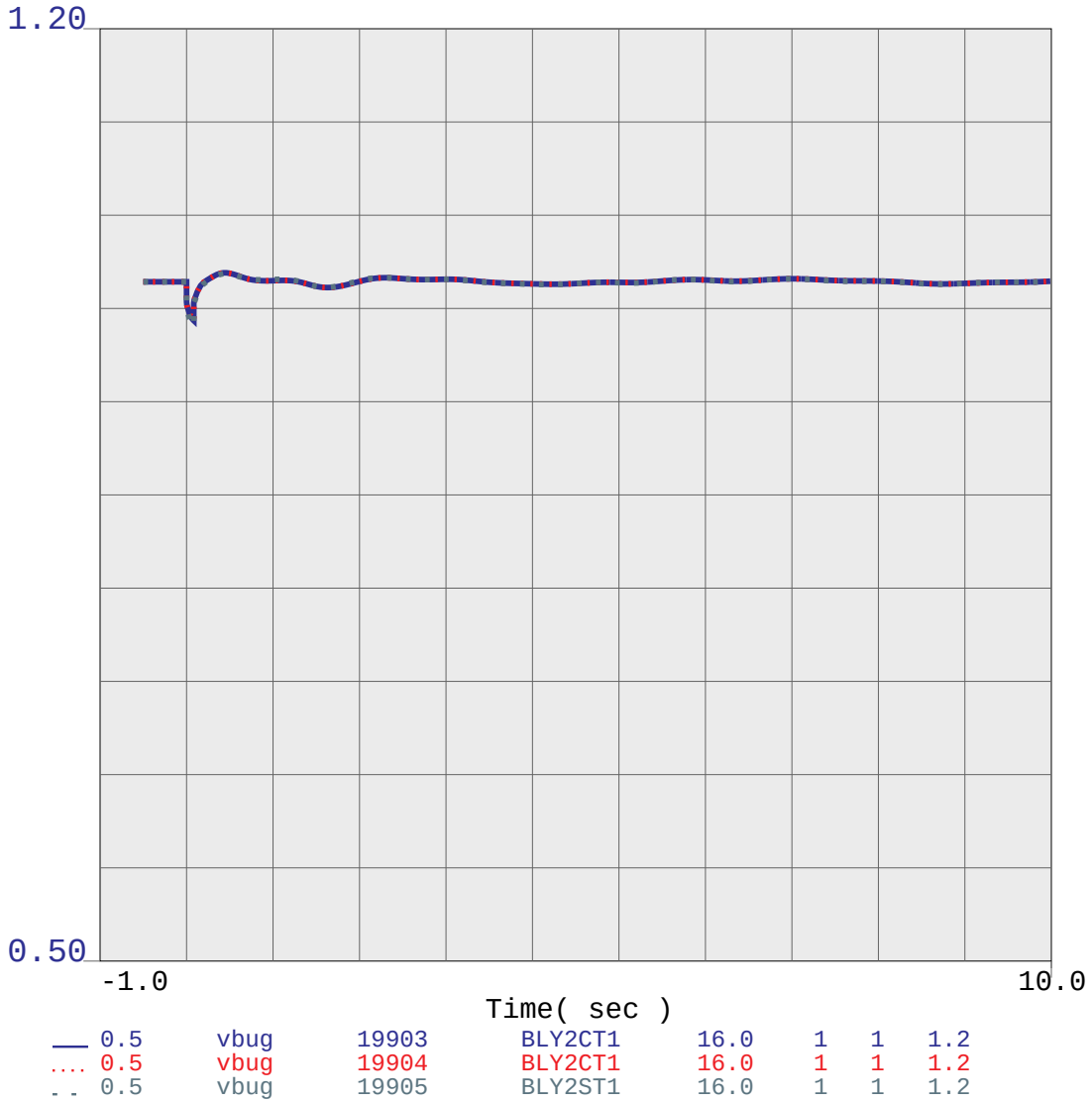

beppostprojectwdpv2stability_etiwandasanb
SERIES COMPENSATION 520MW INCREASE
WITH DPV2 - POST PROJECT

BVM2

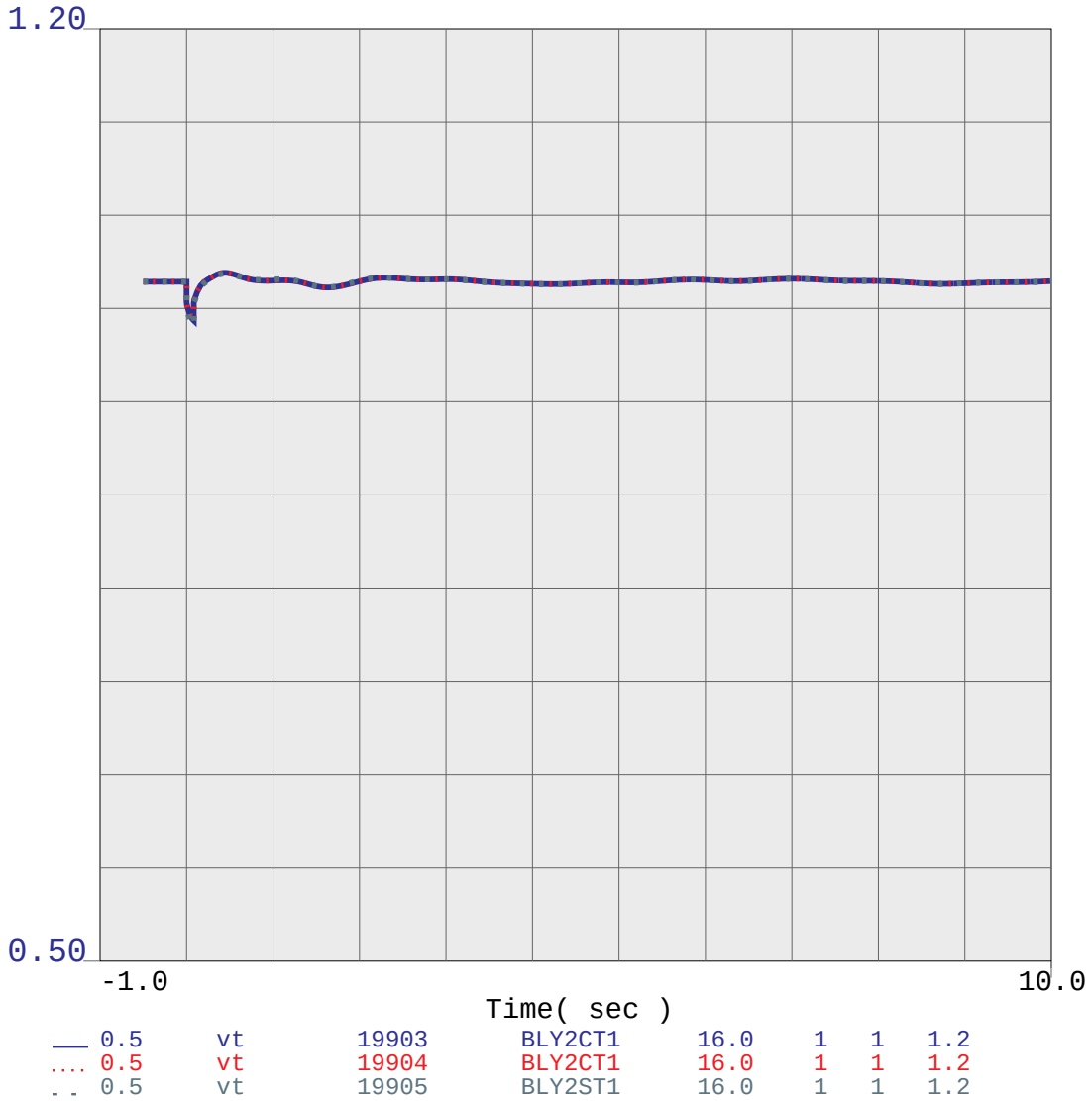

beppostprojectwdpv2stability_etiwandasanb
SERIES COMPENSATION 520MW INCREASE
WITH DPV2 - POST PROJECT

BVM2

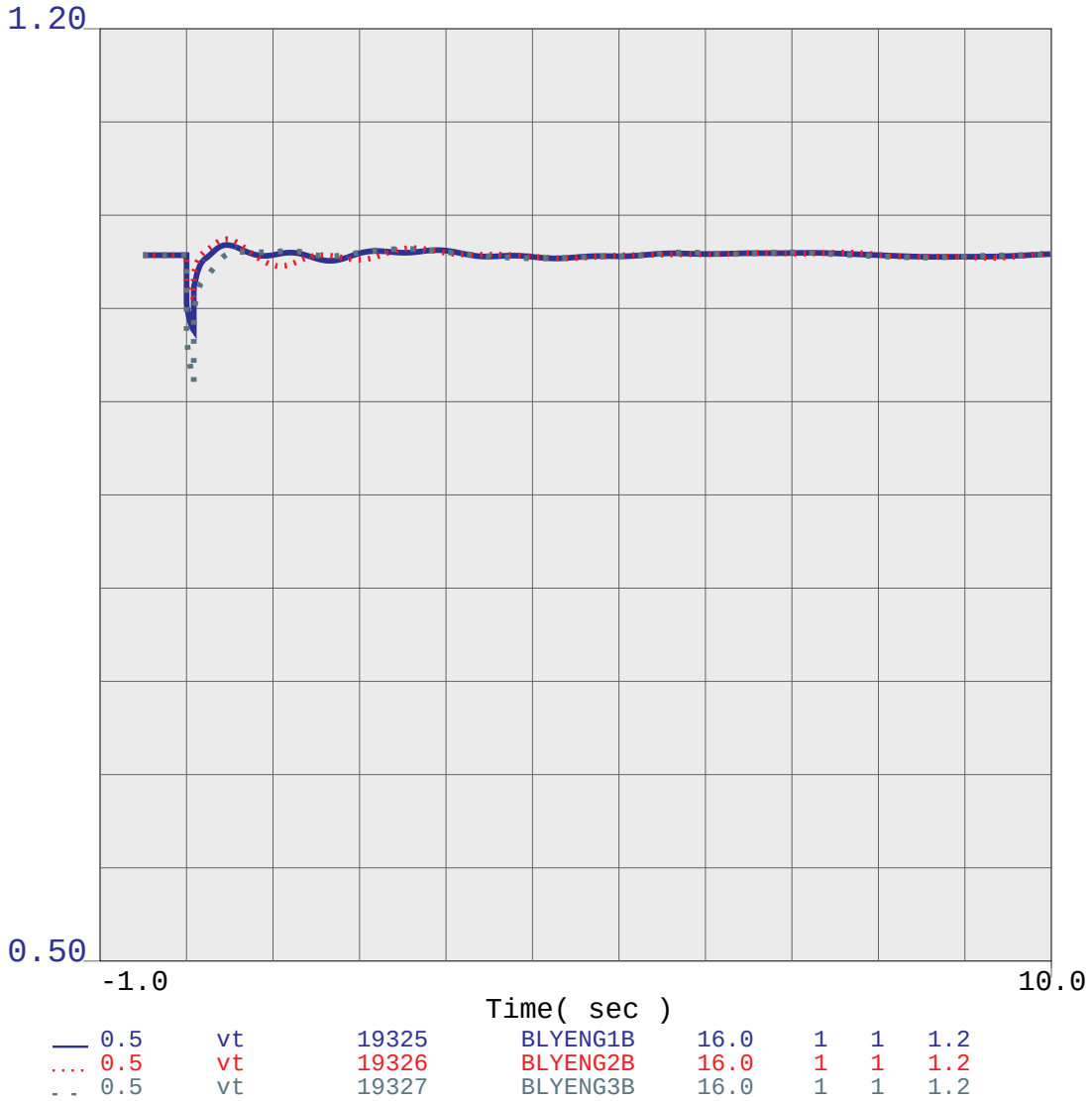

beppostprojectwdpv2stability_etiwandasanb
SERIES COMPENSATION 520MW INCREASE
WITH DPV2 - POST PROJECT

BVM2

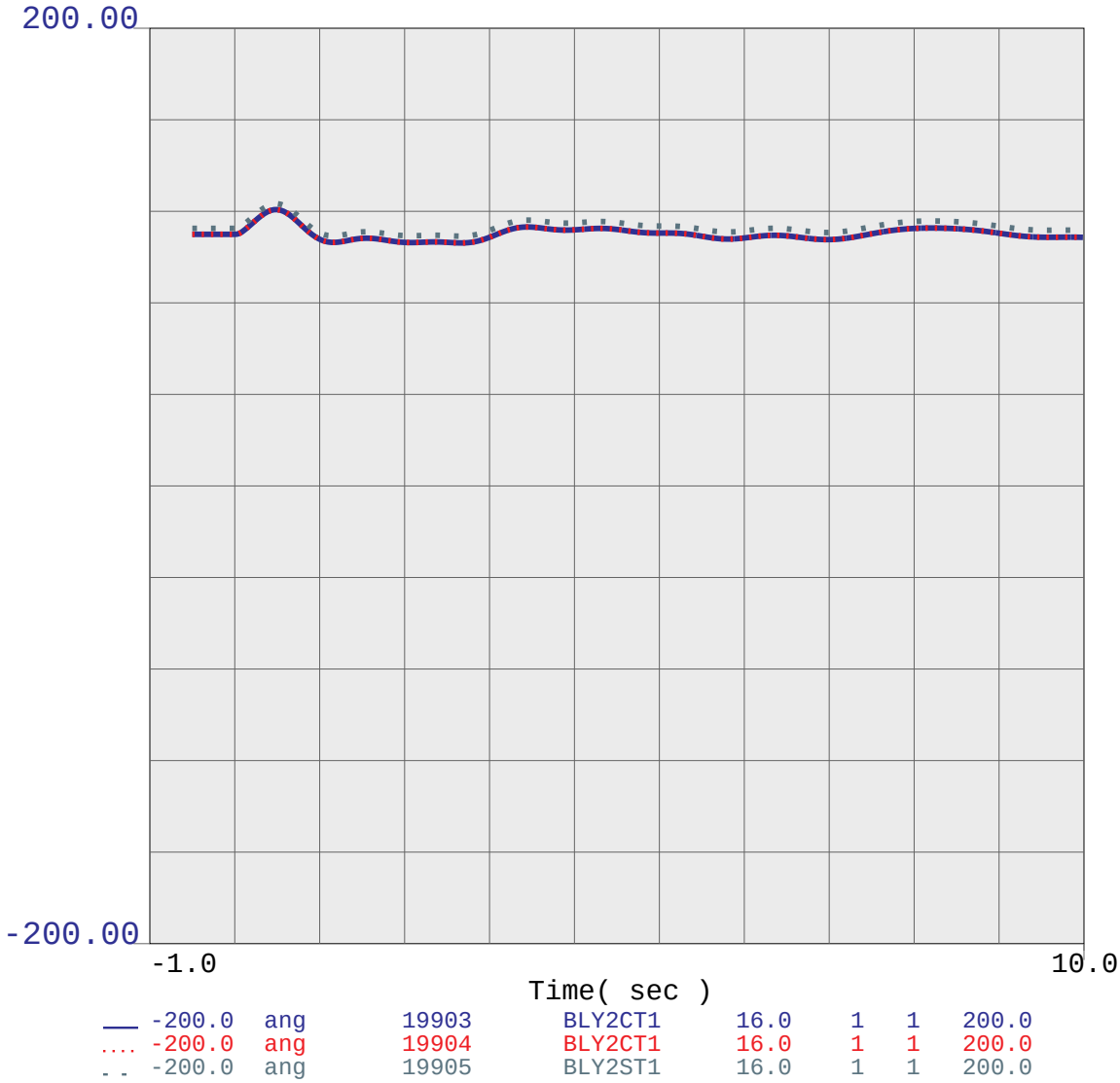

beppostprojectwdpv2stability_etiwandasanb
SERIES COMPENSATION 520MW INCREASE
WITH DPV2 - POST PROJECT

BVM2

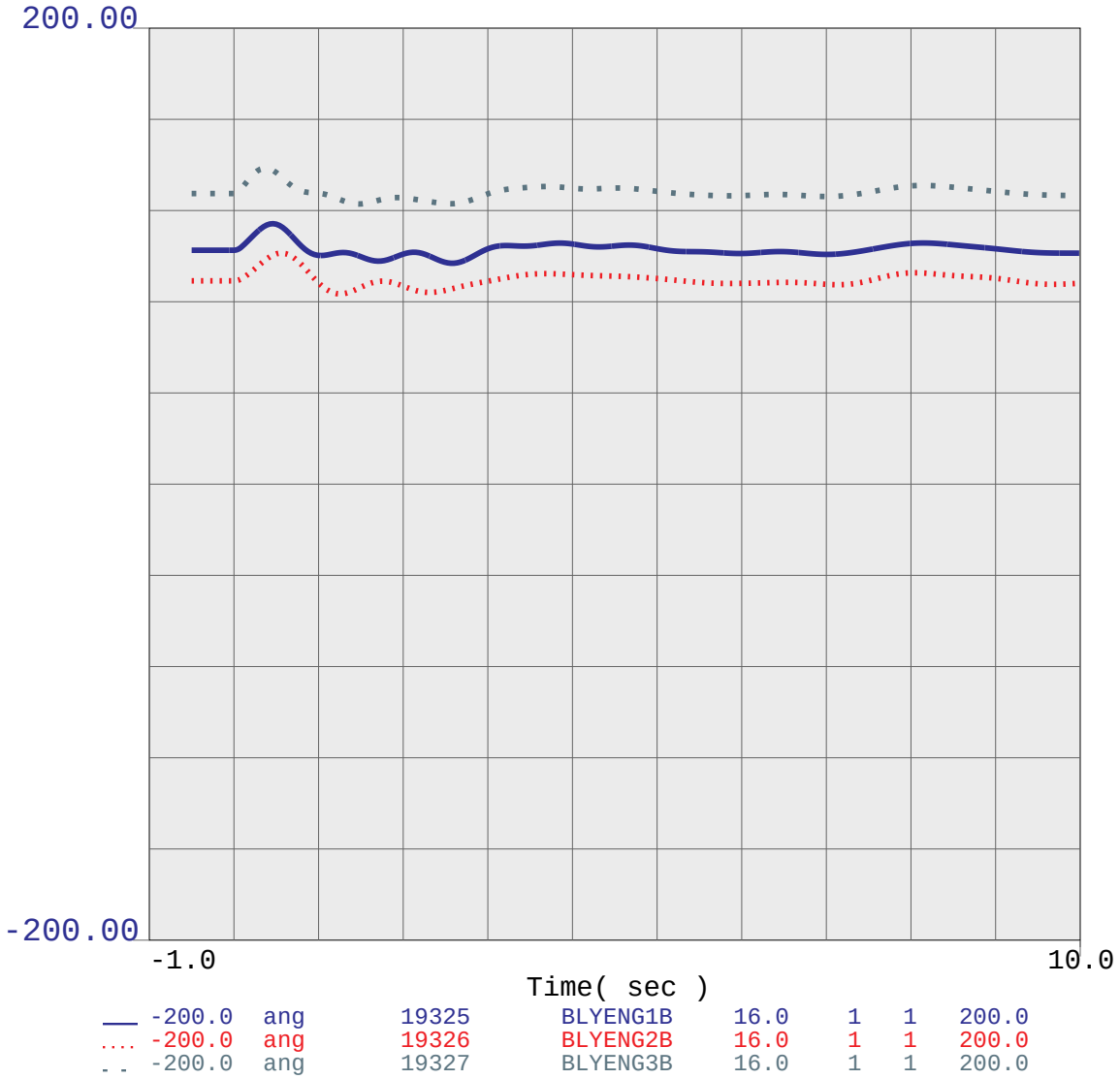

beppostprojectwdpv2stability_etiwandasanb
SERIES COMPENSATION 520MW INCREASE
WITH DPV2 - POST PROJECT

BVM1

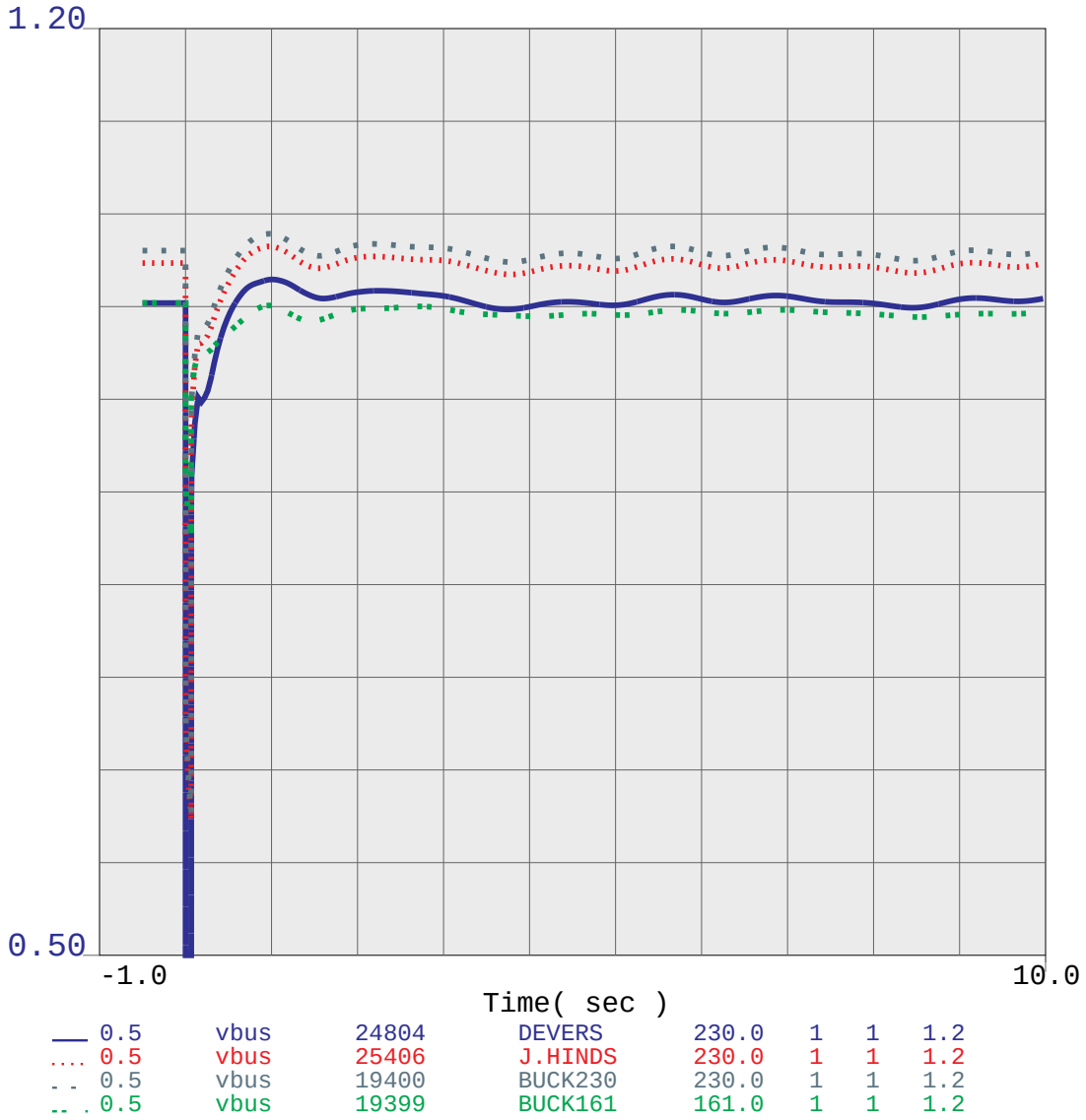

beppostprojectwdpv2stability_palomidpt-slo
SERIES COMPENSATION 520MW INCREASE
WITH DPV2 - POST PROJECT

BVM2

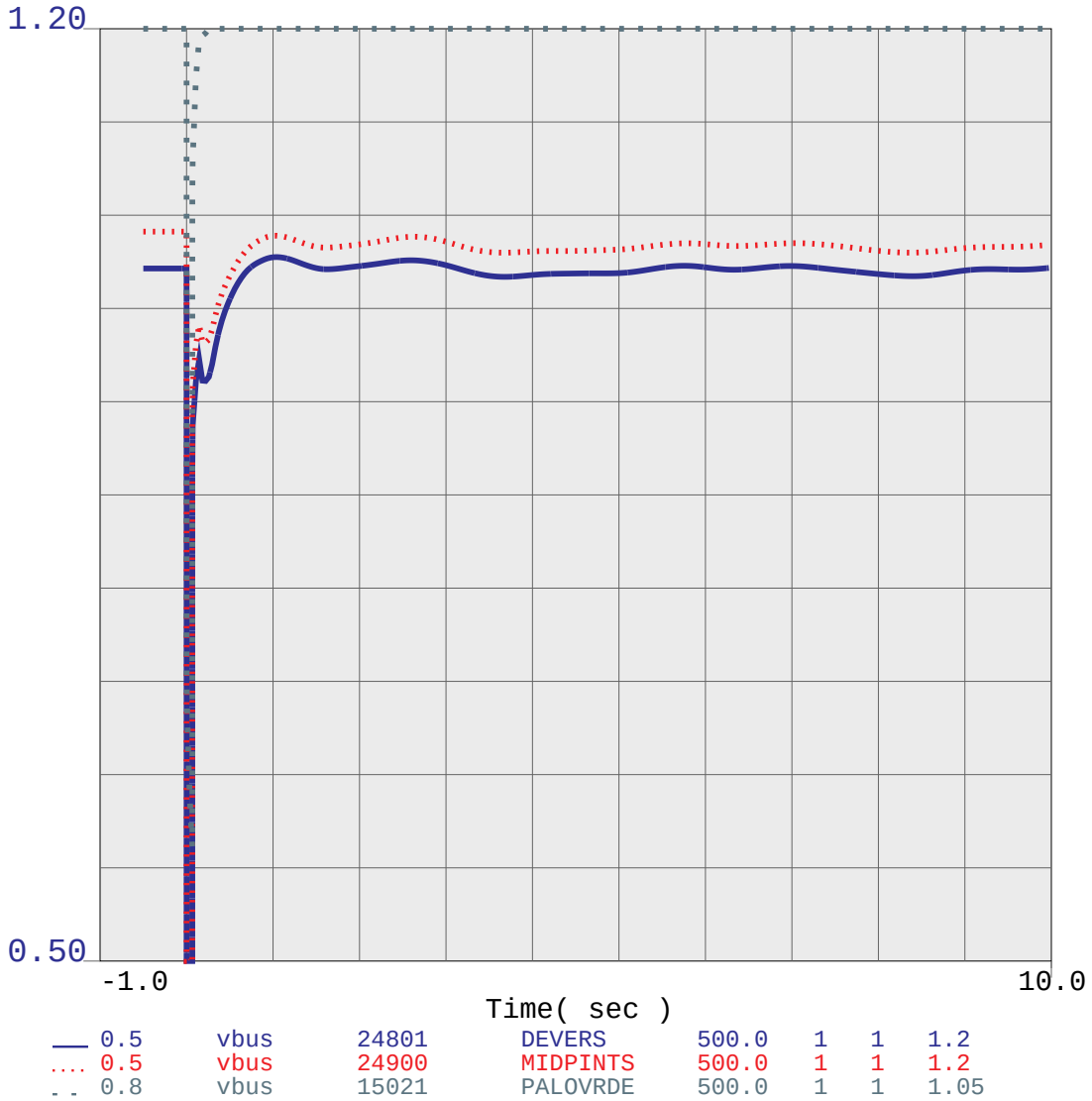

beppostprojectwdpv2stability_palomidpt-slo
SERIES COMPENSATION 520MW INCREASE
WITH DPV2 - POST PROJECT

BVM2

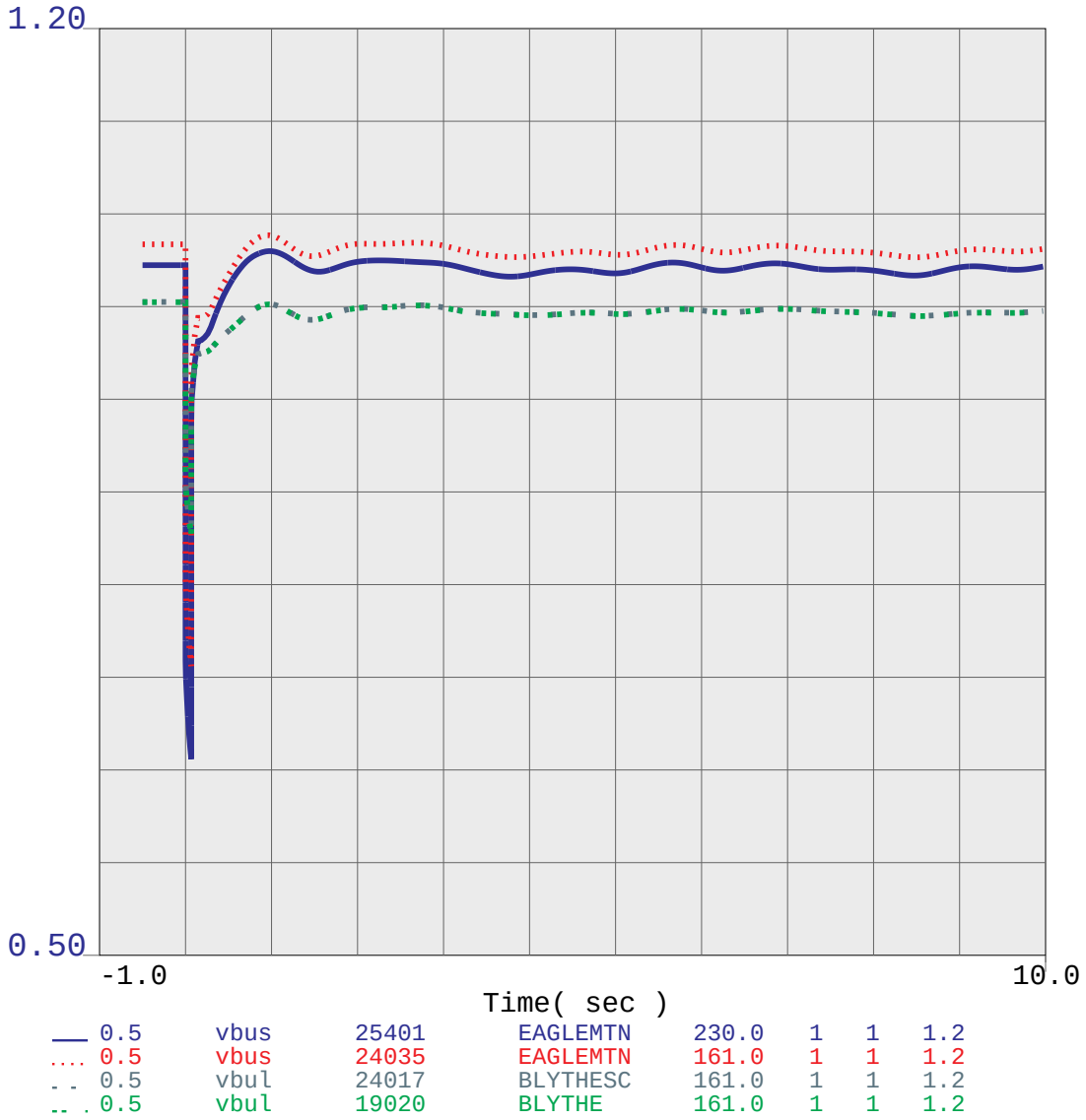

beppostprojectwdpv2stability_palomidpt-slo
SERIES COMPENSATION 520MW INCREASE
WITH DPV2 - POST PROJECT

BVM2

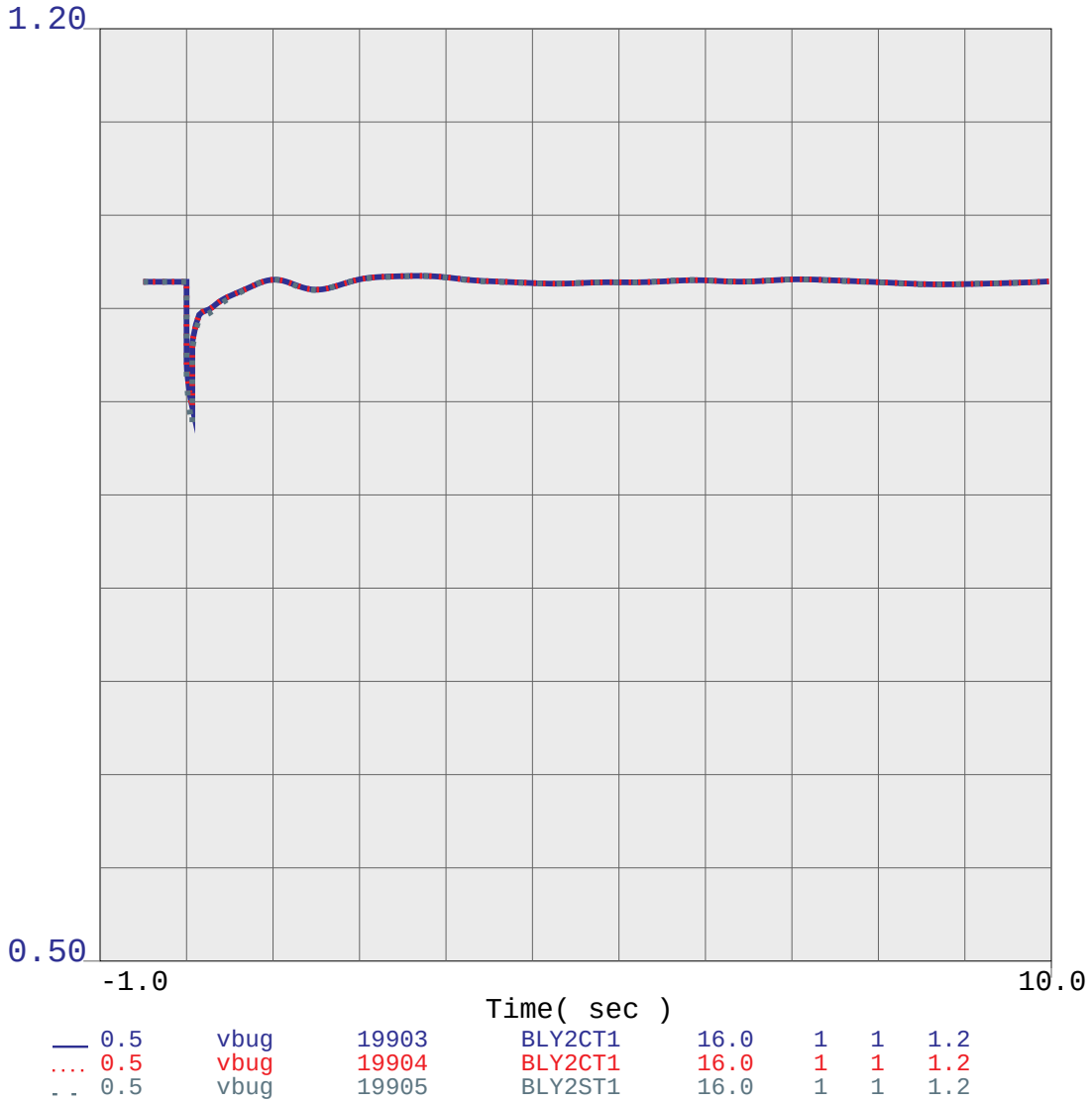

beppostprojectwdpv2stability_palomidpt-slo
SERIES COMPENSATION 520MW INCREASE
WITH DPV2 - POST PROJECT

BVM2

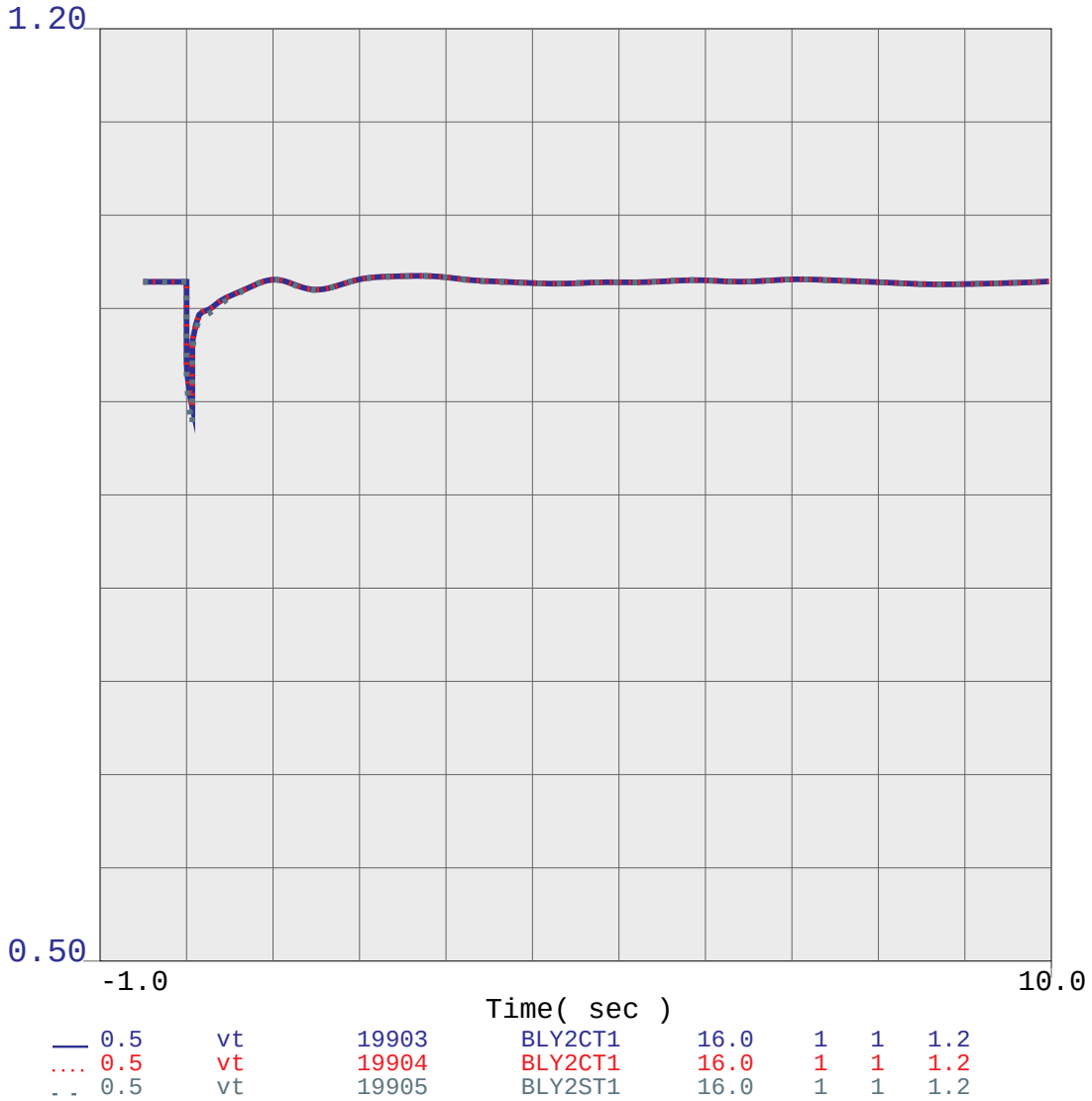

beppostprojectwdpv2stability_palomidpt-slo
SERIES COMPENSATION 520MW INCREASE
WITH DPV2 - POST PROJECT

BVM2

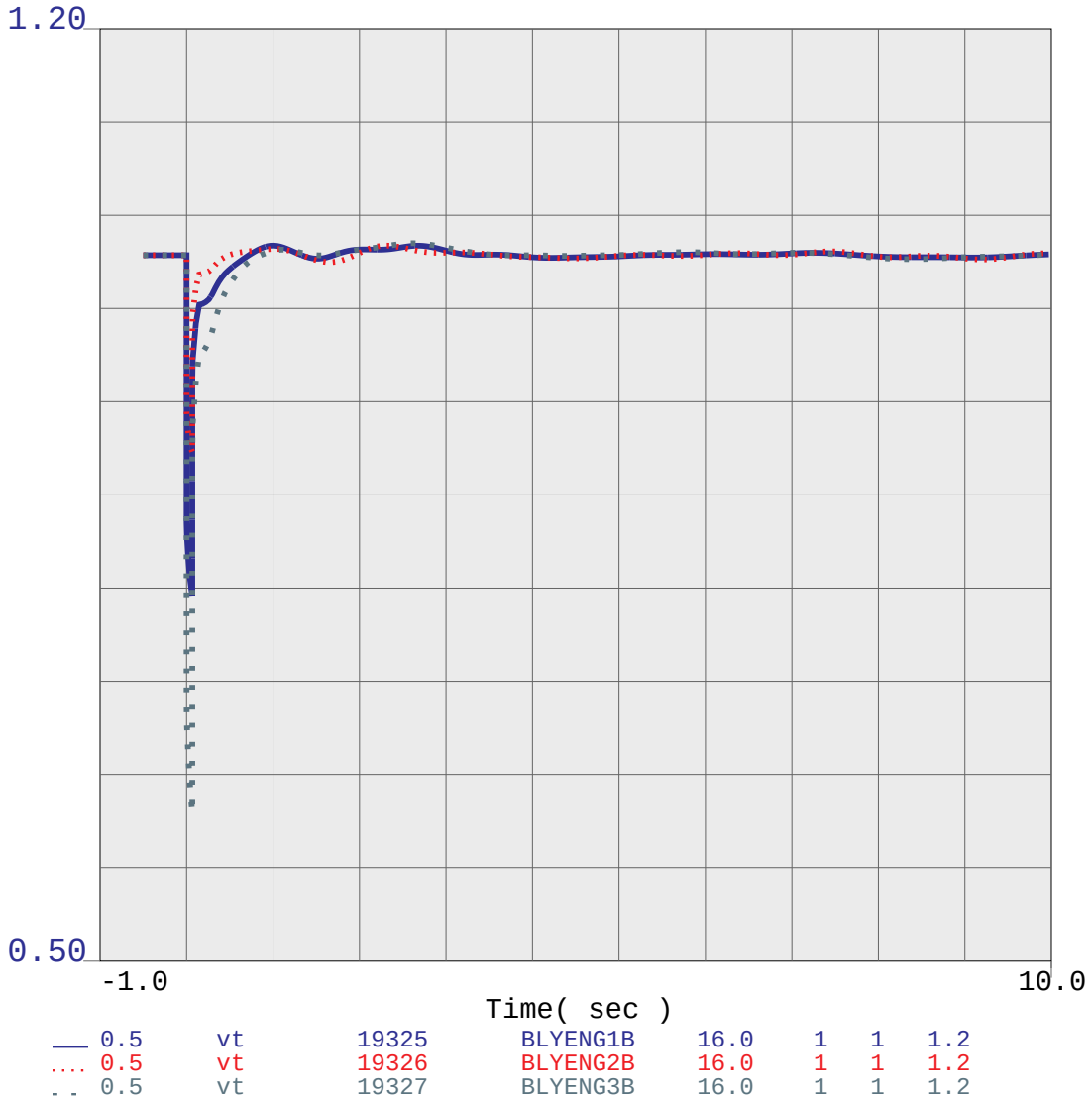

beppostprojectwdpv2stability_palomidpt-slo
SERIES COMPENSATION 520MW INCREASE
WITH DPV2 - POST PROJECT

BVM2

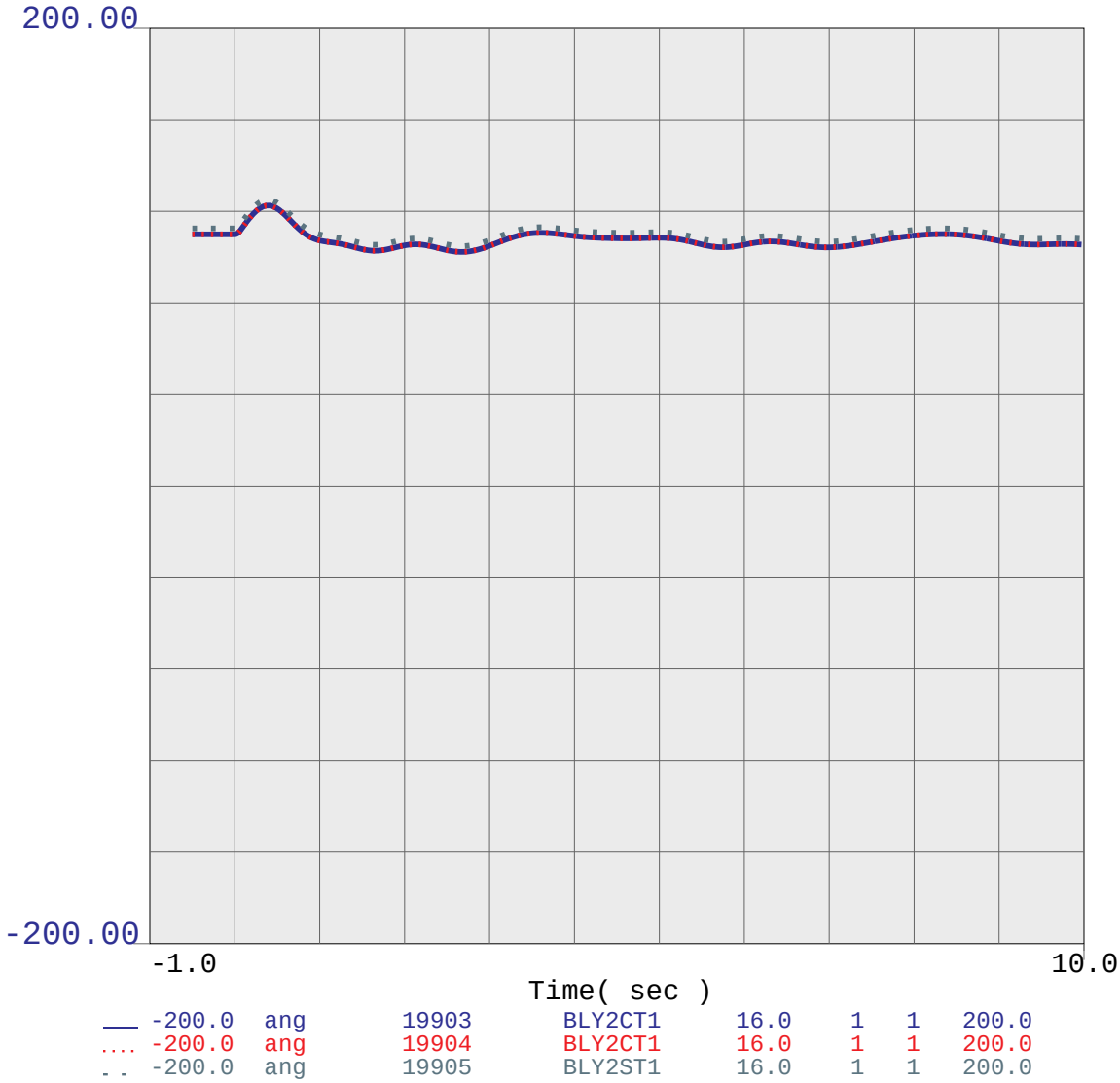

beppostprojectwdpv2stability_palomidpt-slo
SERIES COMPENSATION 520MW INCREASE
WITH DPV2 - POST PROJECT

BVM2

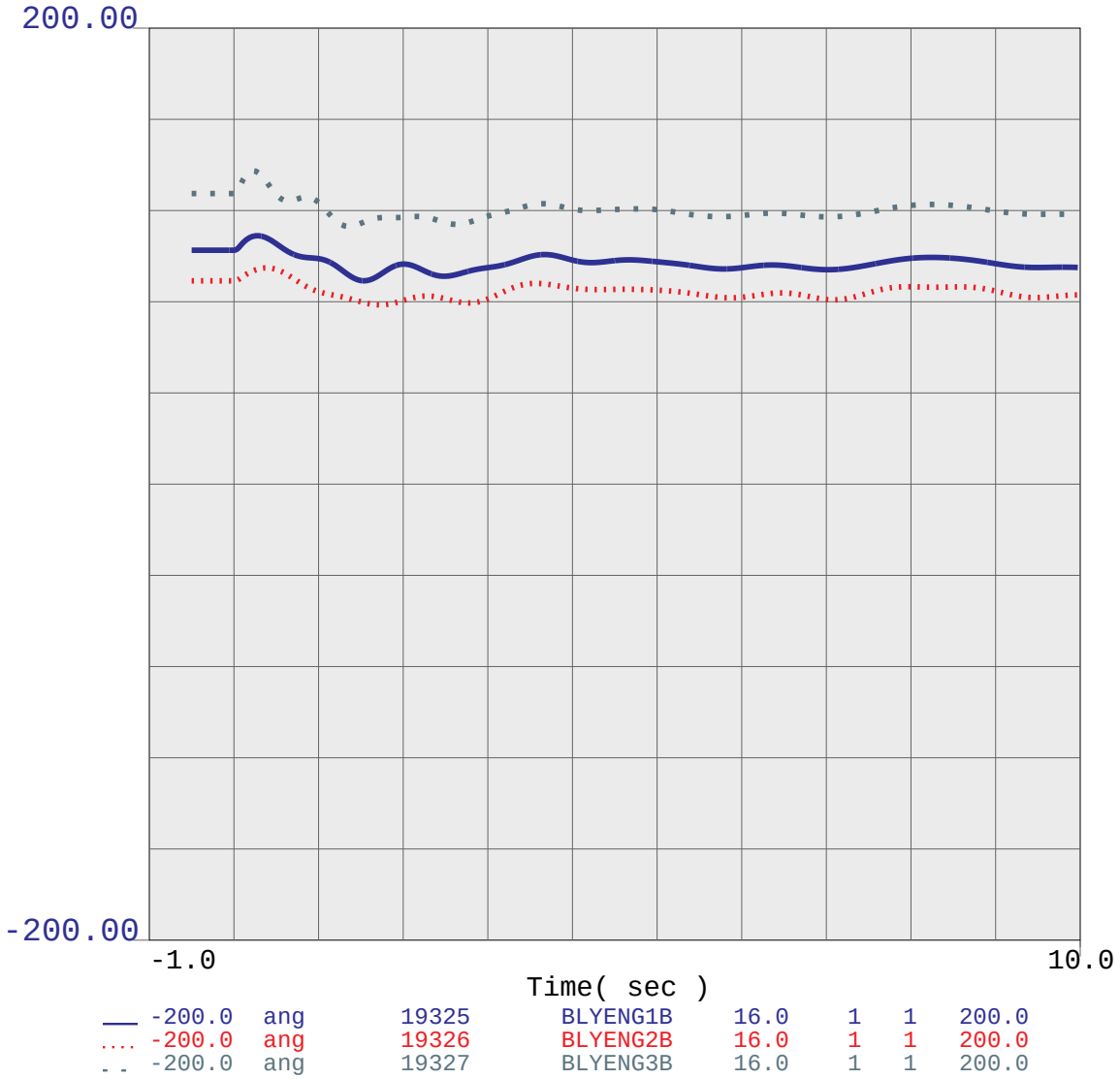

beppostprojectwdpv2stability_palomidpt-slo
SERIES COMPENSATION 520MW INCREASE
WITH DPV2 - POST PROJECT