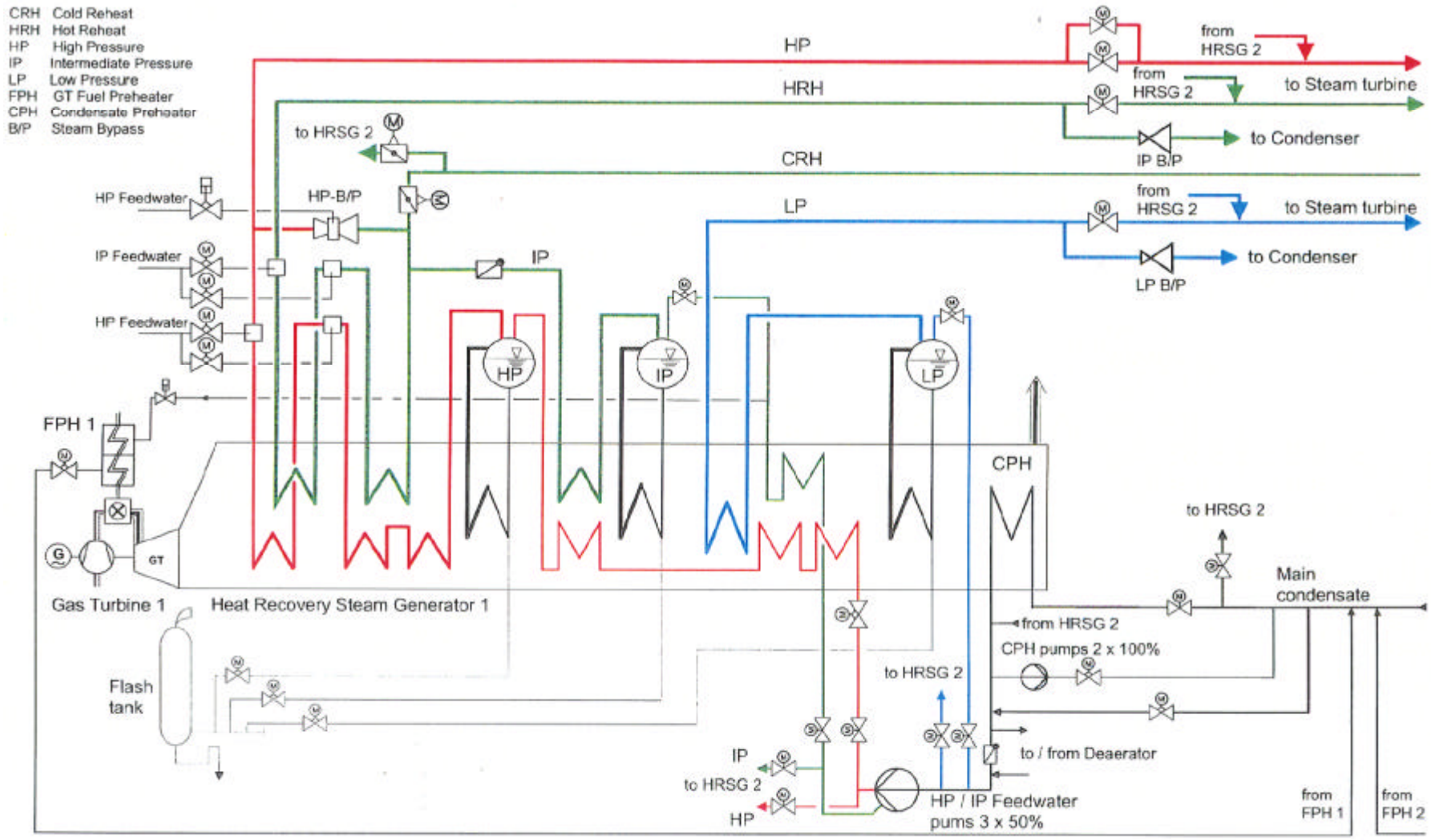

BLYTHE ENERGY PROJECT PHASE II	
FIGURE 2.0-10 ***FLOW DIAGRAM FEEDWATER/ HRSG / STEAM, OVERVIEW***	
RIVERSIDE CO., CALIFORNIA	
DATE: 12/2001	AutoCAD File:207.DWG
SCALE:NTS	DRAWN BY: ML