Hydrogen fueled Heavy Duty Transport

Paul B. Scott, CSO, ISE Corporation, Poway, CA *pscott@isecorp.com*

Presentation to CEC Investment Plan Staff Workshop 29 September 2009

Transportation recharged.

Preview:

- Five introductory slides on the Company, ISE
- Some hard facts….
- Hydrogen transportation technology assessment
- Critical challenges
- Money: cost & volume estimates
- Closing suggestions in summary

ISE has pioneered in electric drive transit vehicle development

ISE
Transportation recharged.®

ISE Detail:

- Focused exclusively on electric drive heavy duty vehicles and components therefor, Clean Vehicles for a Clean Planet, since 1995
- 140 employees, most in Poway, CA, designing & fabricating drive system assemblies to be installed by bus manufacturers
- Approaching 300 vehicles in revenue service every day, cumulative mileage in excess of 10 million miles,
- Privately held

Long Beach Transit operated New Flyer Gasoline Hybrid – "x-ray vision" reveals ultra-capacitors, cooling atop, generator & engine below

What does ISE do?

ISE's Partners & Suppliers

Engine	Ford, Cummins
Drive Motor and Inverter	SIEMENS
Ultra-capacitors, Batteries	Maxwell Technologies, COBASYS, Altairnano
Fuel Cells	BALLARD, UTC Fuel Cells
Electrical Components	Carrier, SUTRAK, Thermo King

ISE: Leader in Integrated Hybrid Drive Systems

Fuel Type/ Technologies Supported

- Gasoline Hybrid
- Diesel Hybrid
- Hydrogen Fuel Cell
- All Electric

Customers & Markets

Operators & OEMs

Transit Buses

High Duty Cycle Commercial Vehicles

- Refuse
- Port
- Local haul

Specialized Vehicles

Other Commercial

- Delivery
- School bus
- Airport

ISE
Transportation recharged.

ISE IS A KEY PLAYER IN HYBRID VEHICLE MARKET

North America		Market Leader	Strongly Positioned Competitors	Aspiring Entrants
Buses	Gasoline	ISE Transportation recharged.®	NONE	Proterra, DesignLine
	Diesel	BAE SYSTEMS, Allison Transmission	ISE Transportation recharged.®	MAN, ZF
	Zero Emissions*	ISE Transportation recharged.®	NONE	ebus
Trucks		EATON Powering Business Worldwide, BOSCH	NONE	ISE Transportation recharged.®, MAN, ZF

*Hydrogen Fuel Cell and Electric

ISE Vehicle Development Status:

- Gasoline Hybrid Bus, 35-45' –

  A commercial product, 250 delivered and in revenue service, in excess of 11 million miles on the Long Beach buses alone. Available from New Flyer, NABI (Gillig in 3 months)

- Diesel Hybrid 60' Articulated –

  50 to enter service in Las Vegas next year

- Hydrogen fueled buses – fifth generation design in commissioning, expect 30+ ISE design H-buses in service next year
- Battery electric – prototype to be delivered next year.
- All but battery electric have full performance (65mph speed, excellent city acceleration + hill climb (ESS limited), range in excess of 250 miles)

- Plus…Key efforts in Electrical Energy Storage Systems for HD vehicles (high voltage, high power, and sealed)

Harsh Realities:

1. Clean energy is hard to store!

•Diesel/ethanol including tank – (one gallon gasoline = 127MJ)	18→ 32 MJ/kg
•CNG incl. tank	18MJ/kg
•Hydrogen in tank	6MJ/kg
•Battery, including BMS, cooling	0.4MJ/kg

-- Limited range capability is thus the major limitation for BEVs

-- All the advanced fuel hybrid buses weigh more than liquid fueled.

2. Weight, additional cost and complexity come with E-drive

(and sizable reductions in emissions!)

Hybrid Bus Energy Flow

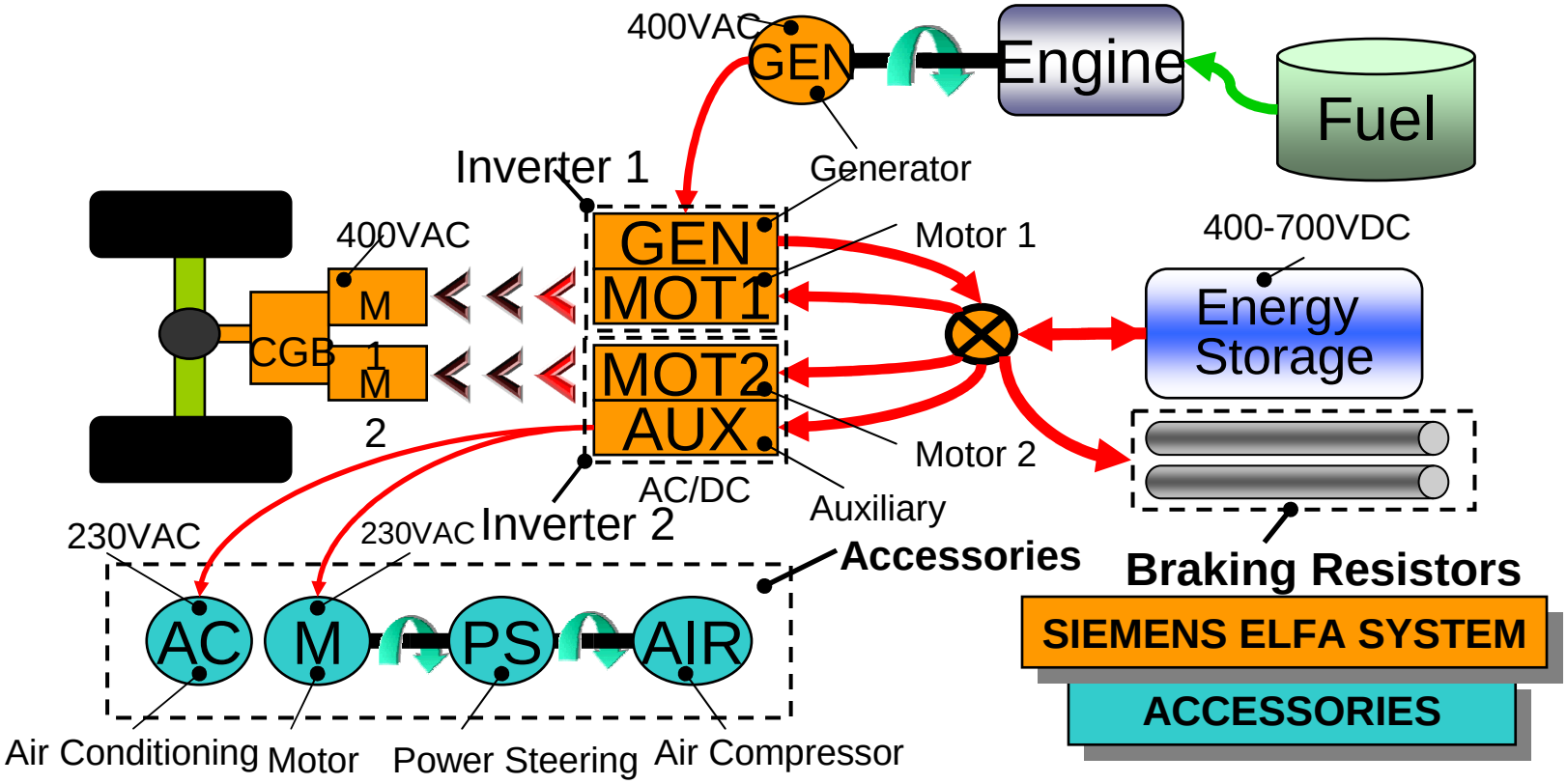

Transportation recharged.

3. The hydrogen path is essential to attaining GHG goals!

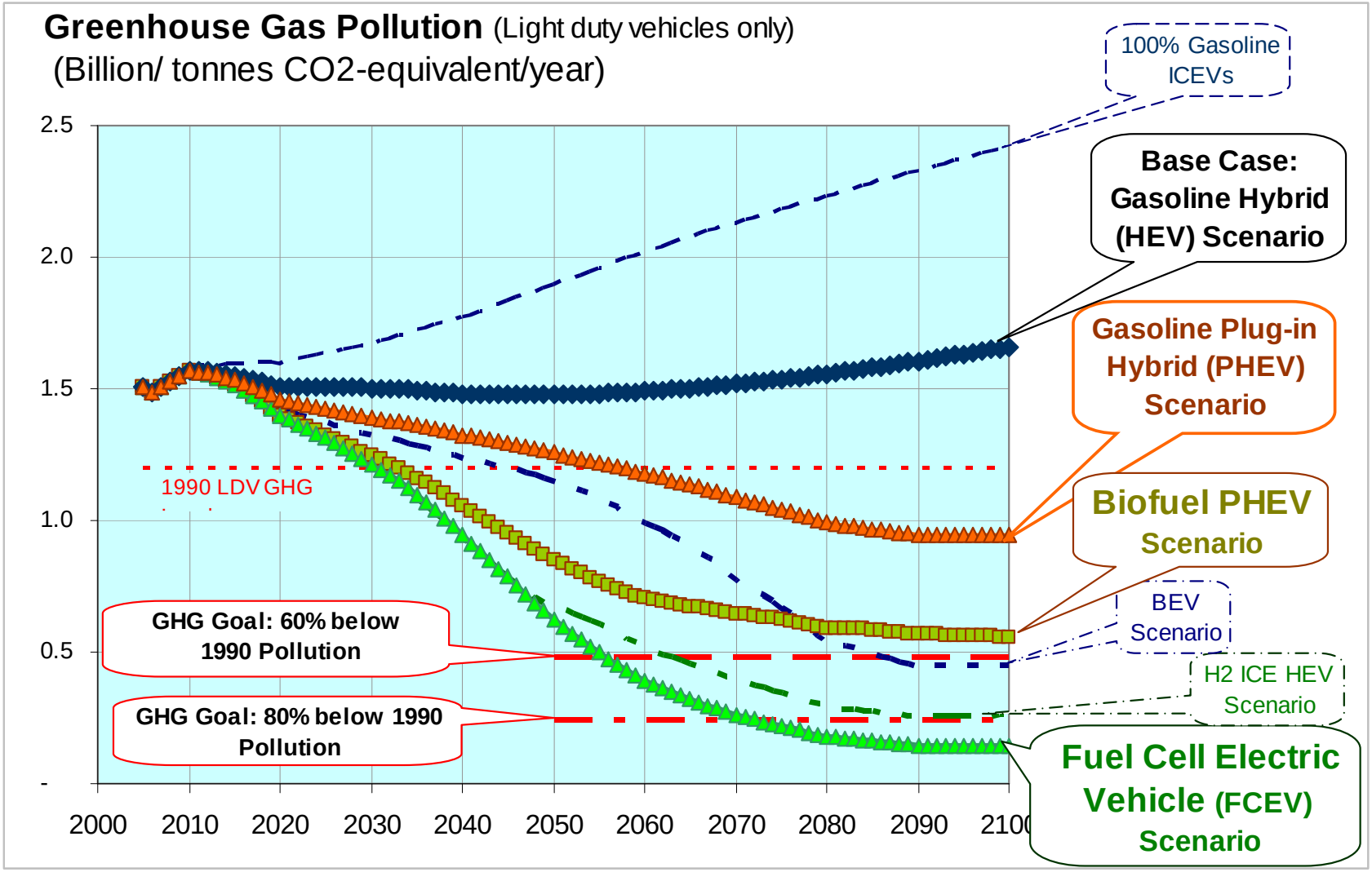

Slide courtesy of Dr. Sandy Thomas

Transportation recharged.

4. HDVs – more emissions reductions/dollar investment

- HD vehicle is used 80 -120 hours/week, with possibility of reductions of fuel use by 12,000 gallons/year and more (equivalent to 40 cars!)

- This heavy in service use suggests that buses, trucks serve well for durability evaluation, building as much as 5000 hours/year in service.

- Innovation in the bus/truck space moves more quickly than LDV, presently over half of bus replacements are electric drive hybrids.

- Investment in HD technology is highly cost effective: One dollar of state funds will do five - ten times more emissions reductions if used for buses than for LDVs! (FTA funds 80% of transit buses)

5. Twelve firms compete for hydrogen bus contracts!

- Daimler
- Van Hool/UTC/AC Transit
- Kiepe/Nedstack – 18 m bus
- Skoda/Proton Motor
- Tuttotransporti/Marco Polo/Nucellsys
- MAN/Neoplan
- Hyundai
- Hino/Toyota
- China
- E-bus
- Proterra
- ISE

Apparent world wide recognition of: benefits, possibility, low entry cost

6. Transportation GHG Reduction Outlook

- Hybrid drive, with regenerative braking, electric accessories, offers up to 50% reduction in fuel use and GHG emissions (more commonly, 20-30%)
- A hybrid-electric CNG bus should be better… not yet proven, certification of a suitable small engine is needed.
- Both battery and FC vehicles offer large efficiency gains, and about a 50% reduction in WTW GHG using fuel from HC sources (Conventional generation mix for BBus, NG to hydrogen for FCB). *But this is inadequate!*
- Both offer a direct path to near zero GHG with deployment of solar/wind electricity or zero emission bio sources of electricity or methane. ***Effective and public development of renewably sourced hydrogen could be a game changing event!***
- $4/kg Wind sourced hydrogen? ISE, GE, NREL see this as possible!

The SunLine Transit HHICE bus, positioned to refuel with hydrogen supplied by wind generation.

“NEWS

•A Clean Future – too expensive for us?

•The HyFLEET:CUTE Final Conferences falls at a time when financial issues are of major interest. Duncan MacLeod, Vice President of Shell Hydrogen, knows that the HyFLEET:CUTE Project has been a major success, with Shell participating in both the Amsterdam and Luxembourg operations. In his presentation at the Conference he will argue that the effort and investment have to be continued if hydrogen is to be successfully brought into the markets.”

Lifted from a HyFleet promo 23 Sept.

- **With combined interests of Archer Daniels Midland et.al., Farm Bureau… a 15 billion gallon/yr ethanol market was stipulated and a $10 billion/yr corn ethanol subsidy was created to support the market.**
- **Installing a hydrogen infrastructure + “buy-down” of LDVs could be done with 1/5 the corn subsidy, with result of new businesses, exports…. In a decade reducing oil imports by over a billion $ per day.** p1
- **HD hydrogen vehicle program support of 1% of the ethanol subsidy could increase H-Bus production to ten times that of present, resulting in halving costs, making a worldwide competitive product.**

Slide 14

p1 see Ogden, ARB presentation, slide 31, need $22B over 14 years to build infrastructure, buydown car cost
pscott, 9/23/2009

Reviewing technologies: London Buses in development

- 75kW FC, ultra-capacitor city bus, to meet needs of Transport for London
- 37 seated passengers, GVW under 32,000 lb.
- ISE has 5 year fixed price support contract,
- Pricing for follow-on buses under $2M/

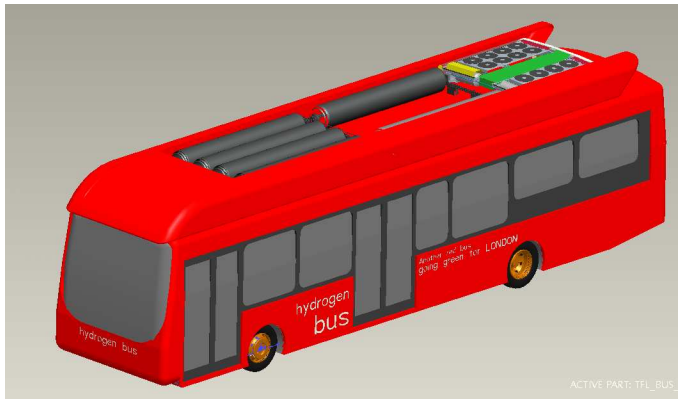

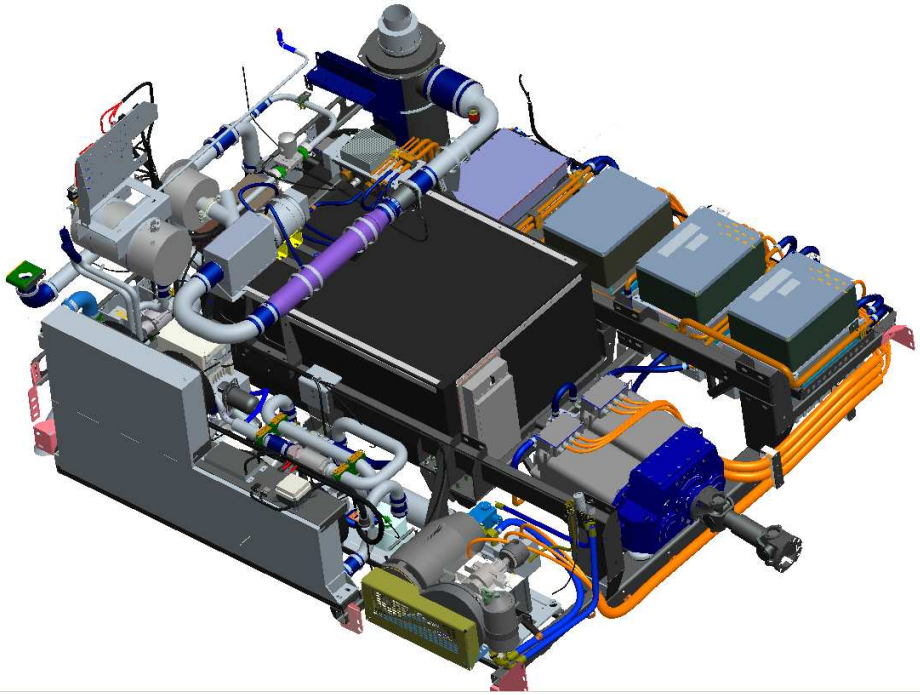

ISE
Transportation recharged.

Power package for London Buses

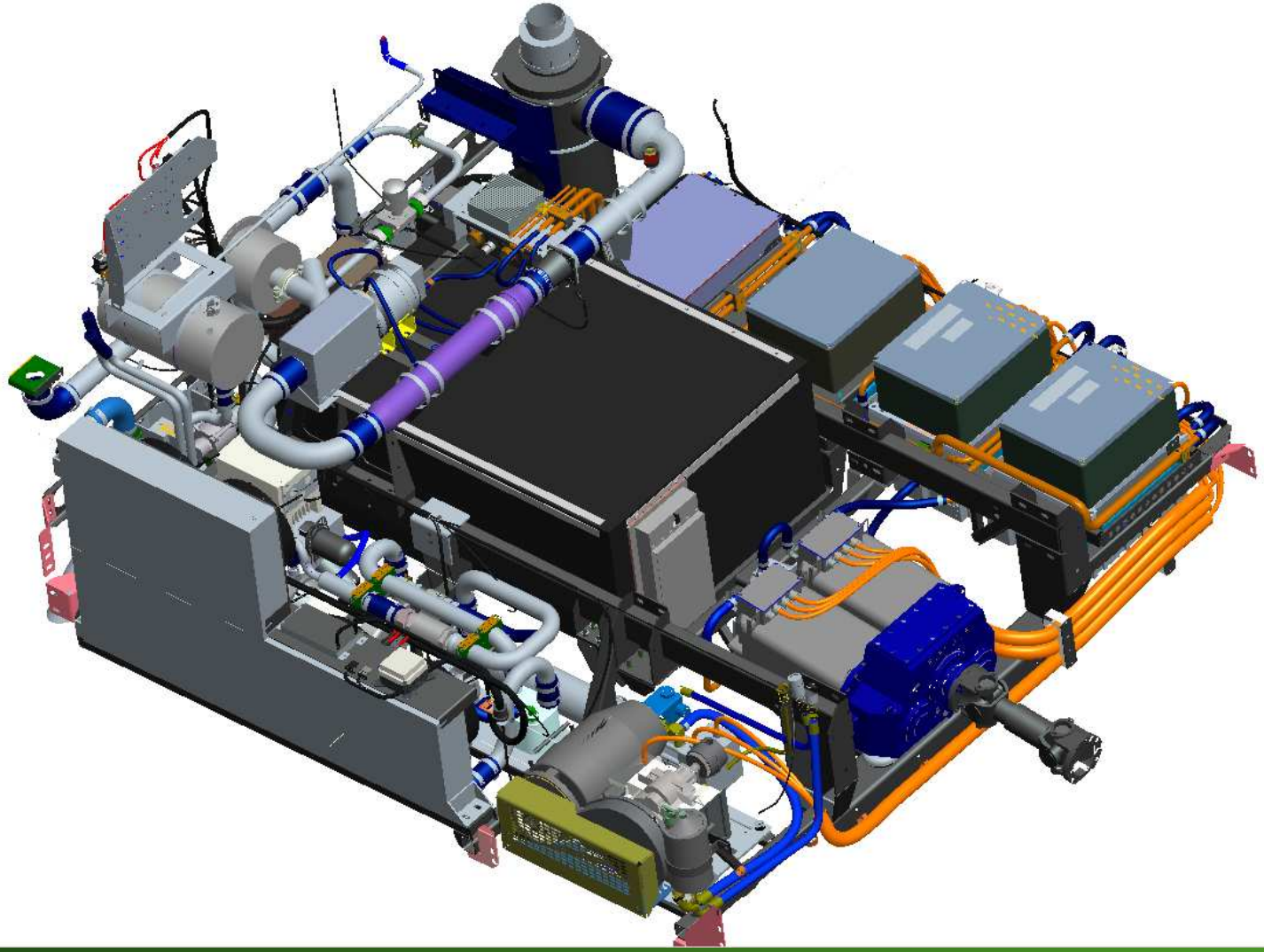

Showing the fuel cell end of the BCT bus:

- Range in excess of 300 mi (500 km) on 45 kg hydrogen,
- Certified to Canadian road and safety standards
- This bus carries up to 70 passengers, speed to 65 mph (105km/h), climbs a 20% grade fully loaded
- Prototype has been in service, twenty production buses being delivered to BC Transit

Fuel Cell Bus Drive Train Production, May 2009:

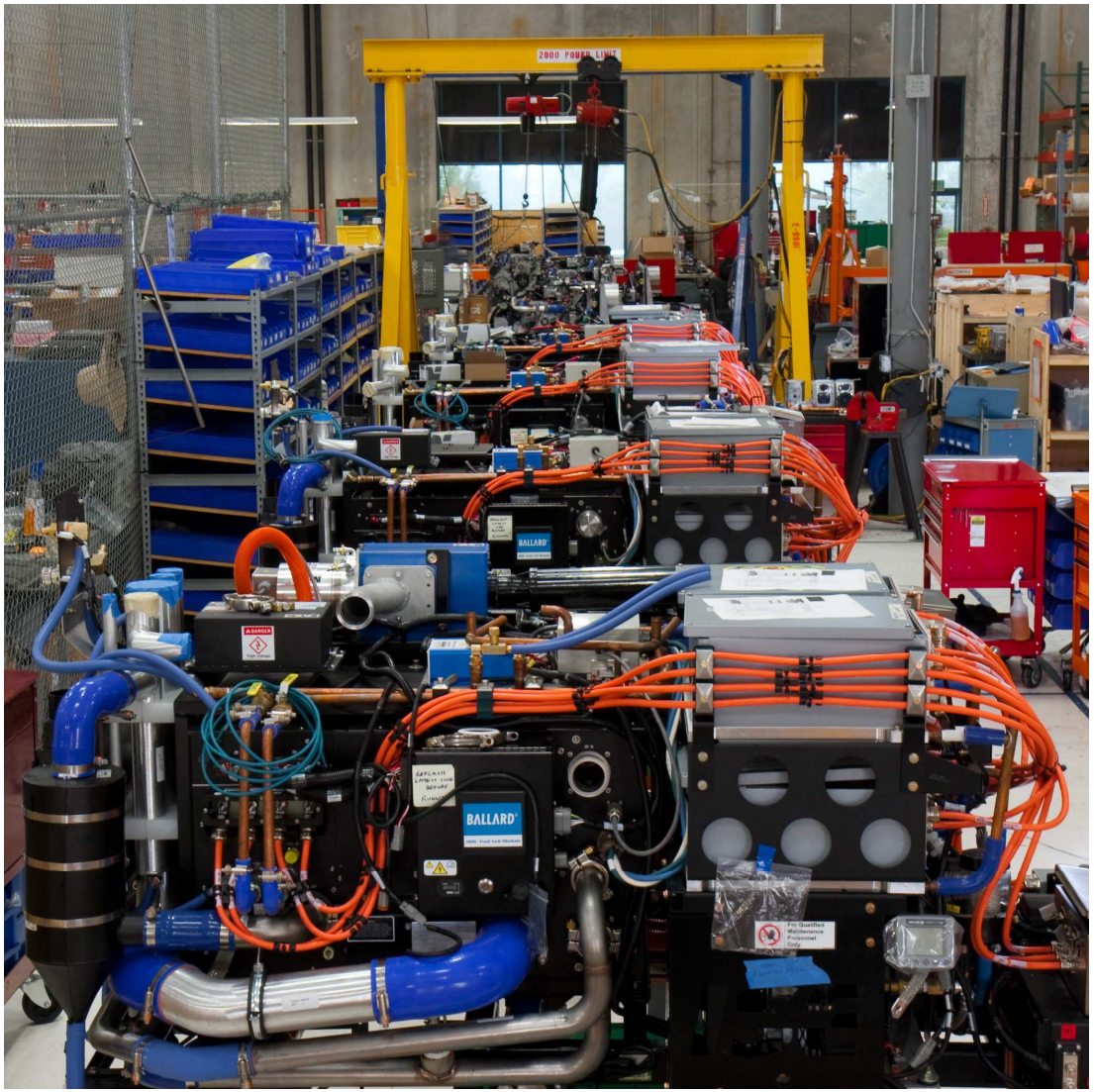

Transportation recharged.

Zero Emission: All-Electric Bus

ISE Battery Electric Drive System Expected Advantages:

- Uses large lithium battery pack with standard ISE drive system
- Zero Emissions, quiet operation
- To be suitable for tripper service, mid-day recharge
- No engine certifications, no traps, no filters, no fuel,
- Up to 50% reduction in GHG emissions compared to liquid fueled hybrid bus
- Grid power comes from largely domestic sources
- Inexpensive operation - @ $0.13/kwh, one third the cost of diesel (but CNG is competitive in cost)

- ***Challenges:***
  - +**Funding the development** of a reliable high-energy battery pack for heavy duty transit
  - +Installation and support of electric infrastructure
  - +Battery cost, mass, volume
  - +Range!

Next big challenge: Zero carbon fuel in commercial volume, competitive pricing

- Electricity has storage challenge, hydrogen has distribution challenge
- AQMD funded program illustrated above demonstrated feasibility, projected that renewable (wind) hydrogen in megawatt (50+ buses) scale may be lower cost than diesel. {Confirmed by GE, NREL in separate studies.}
- Many pathways to sustainably sourced hydrogen – “Made in USA”
- Next step…. 50 bus size installations with zero carbon fuel.